Ceramic SMD Crystal

Model: FX216C Series **RoHS Compliant / Pb Free** **Rev. 7/15/2008**

http://www.foxonline.com/need_a_sample.htm

Need a Sample®

FEATURES

- Low Cost
- Fundamental to 54 MHz
- Tape and Reel (1,000 pcs. STD)

• PART NUMBER Learn More - Internet Required

Part Number	Model Number	Frequency Range (MHz)
617C-Frequency-xxxxx	**FX216C**	24.000 ~ 54.000

• STANDARD SPECIFICATIONS[1]

PARAMETERS	MAX (unless otherwise noted)
Frequency Range	24.000 ~ 54.000 MHz
Frequency Tolerance @ 25ºC	±50 PPM[1]
Frequency Stability, ref @ 25ºC Over Operating Temp Range	±50 PPM[1]
Temperature Range	
Operating (TOPR)	-10ºC ~ +60ºC[1]
Storage (TSTG)	-40ºC ~ +85ºC
Shunt Capacitance (Co)	5.0 pF
Load Capacitance (CL)	8 pF ~ Series (Customer Specified)
Drive Level	10uW typ. 100uW
Aging per year	±5 PPM
Maximum Soldering Temp / Time	260ºC / 10 Seconds
Moisture Sensitivity Level (MSL)	1
Termination Finish	Au

[1] Other tolerances, stabilities & operating temperature ranges available.

Frequency Range (MHz)	Operating Mode	Max ESR Ω
24.000 ~ 29.999	Fundamental	100
29.999+ ~ 35.999	Fundamental	80
35.999+ ~ 54.000	Fundamental	60

Note: Dimensional drawing is for reference to critical specifications defined by size measurements. Certain non-critical visual attributes, such as side castellations, etc. may vary.

The above specifications, having been carefully prepared and checked, is believed to be accurate at the time of publication; however, no responsibility is assumed by Fox Electronics for inaccuracies.

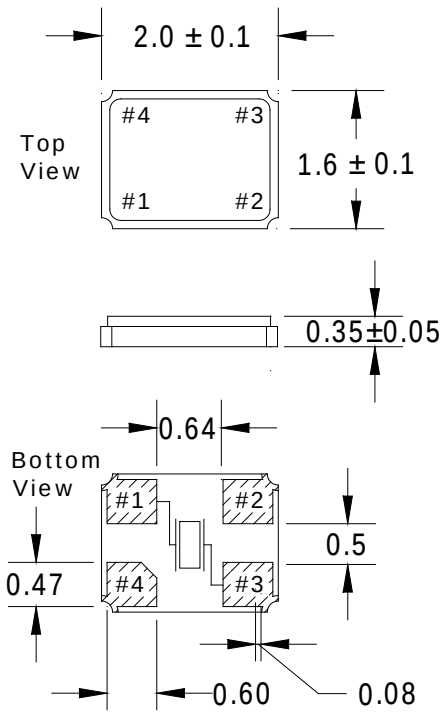

Recommended Solder Pad Layout

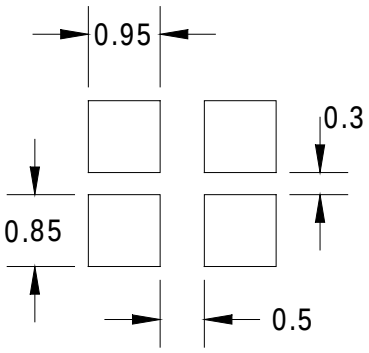

All dimensions are in millimeters.

Pin Connections

#1 Crystal	**#3 Crystal***
#2 NC	**#4 Lid (GND)**

***For proper operation, Pin 4 must be connected to GND.**

FOXElectronics 5570 Enterprise Parkway Fort Myers, Florida 33905 USA +1.239.693.0099 FAX +1.239.693.1554 http://www.foxonline.com
EMEA Tel/Fax: +44 .1767.312632 | **Asia** Hong Kong Tel: +852.2854.4285 Fax +852.2854.4282 | **Taiwan** Tel: +886.2.22073427 Fax +886.2.22073486 | **Japan** Tel: +81.3.3374.2079 Fax: +81.3.3374.5221

© 2008 FOX ELECTRONICS | ISO9001:2000 Certified

Ceramic SMD Crystal

Model: FX216C Series **RoHS Compliant / Pb Free** **Rev. 7/15/2008**

http://www.foxonline.com/need_a_sample.htm

Need a Sample®

FX216C Marking Identification

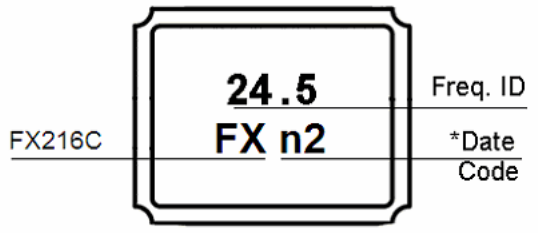

*D/C: Year/Month & Week

Example: ' n2 ', n = January 2008, 2 = 2nd week in January 2008

Year/Month	Jan	Feb	Mar	Apr	May	Jun	Jul	Aug	Sep	Oct	Nov	Dec
2008	n	p	q	r	s	t	u	v	w	x	y	z
2009	A	B	C	D	E	F	G	H	J	K	L	M
2010	N	P	Q	R	S	T	U	V	W	X	Y	Z

• TAPE SPECIFICATIONS (millimeters)

MODEL	A	B	C	D	E	F	STD Reel QTY
FX216C	∅1.55	4.0	4.0	3.5	8.0	0.65	1,000

• REEL SPECIFICATIONS (millimeters)

MODEL	G	H	I	J	K	L	M
FX216C	2.0	∅13.0	21.0	60.0	180.0	9.0	2.0

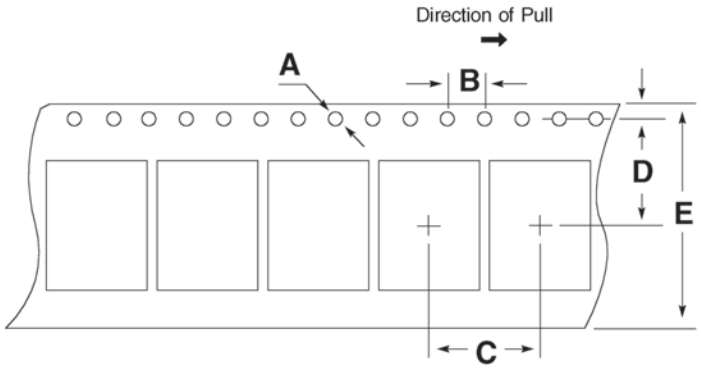

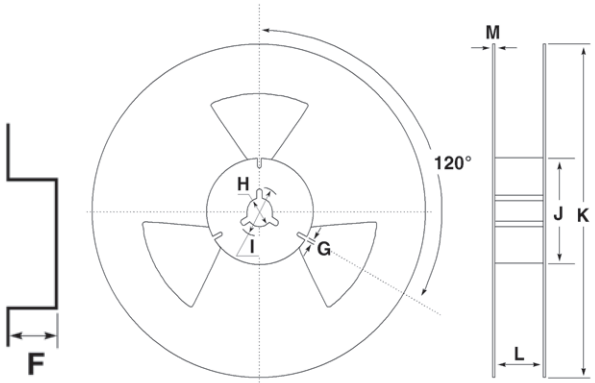

© 2008 FOX ELECTRONICS | ISO9001:2000 Certified