FX-3210

2U Rackmount Appliance With Support For Intel Sandy Bridge / Ivy Bridge Processors And Intel C206 Chipset

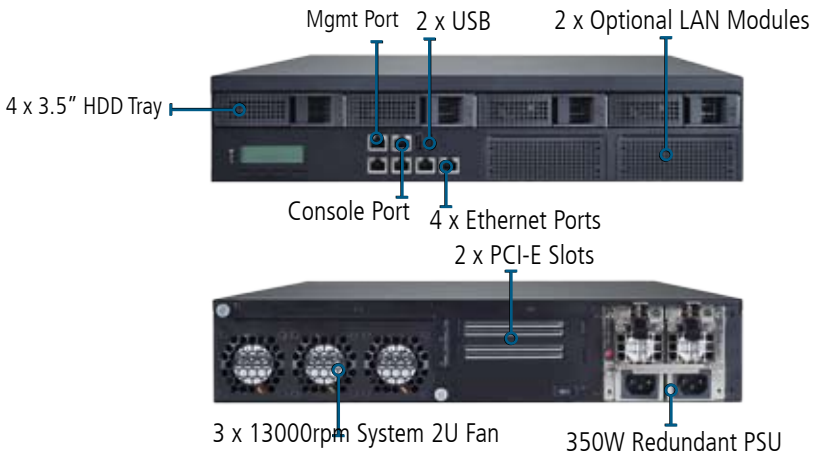



Features

Intel® 2nd and 3rd generation Processors support

The FX-3210 is compatible with both 2nd and 3rd* generation Intel® Xeon® and Core™ processors. The 3rd generation Intel Core™ processor is the first 22nm CPU in the market, it delivers increased performance with lower power, also enables multiple capabilities enhancing connectivity, responsiveness and security.

*Older units may require BIOS update.

Solid Expansion Capabilities

The FX-3210 is also equipped with four 3.5" HDD bays for large capacity storage drives. This comes in addition to the CompactFlash slot.

Lanner Ethernet Modules

Lanner's unique modular design allows you to mix and match your networking ports to suit your needs. Choose from over 8 Ethernet network modules including RJ45 with bypass, fiber bypass and 10Gbps modules. Two optional 8-port LAN modules can be fitted to the FX-3210, making available a total of 20 LAN ports.

Redundant Power Supplies

Having dual power supplies allows some redundancy protection with users that have highly sensitive networks. For maximum effectiveness, these power supplies should be connected to different sources of electricity (i.e. wall socket + battery).

Dimensions: 444 x 550.2 x 87.8 mm

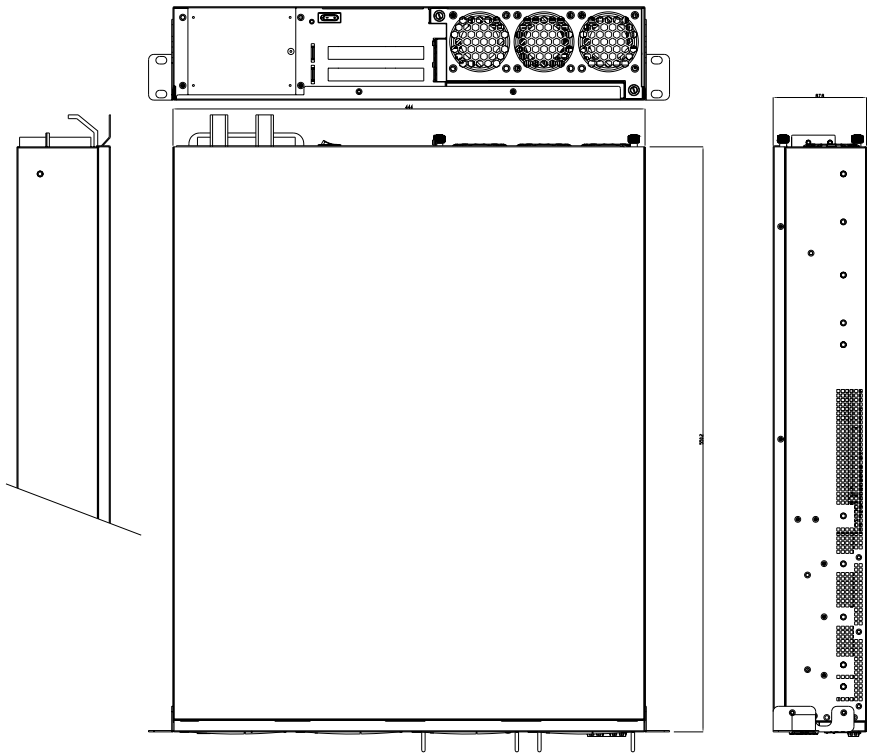

Specifications are subject to change without notice

Specifications

Form Factor		2U Rackmount
Platform	Processor Options	Intel Xeon® E3-1275V2, Intel® Xeon® E3-1225V2, Intel® CoreTM i3-3220, and Intel® Pentium® G2120 in LGA 1155 package
	Chipset	Intel® C206 series chipset Cougar Point PCH
BIOS		AMI BIOS
System Memory	Technology	ECC or non-ECC DDR3 1333/1600MHz SDRAM
	Max. Capacity	16GB
	Socket	4 Dimm socket from 2 channel
OS Support		Linux kernel
Storage	HDD Bays	3.5" HDD x 4 (HDD Tray x 4)
	Flash	Compact Flash Type II Socket x 1
Networking	Ethernet Ports	4 x GbE RJ45 default 20 GbE ports maximum
	Bypass	2 Pairs G3
	Controllers	4 x Intel 82574L or 2 x Intel I350
	Ethernet Modules	2
	Management Port	1 GbE RJ45
	Security Acceleration	N/A
I/O Interface	Reset Button	1 x Reset button (Software Reset)
	Console	1 x RJ45
	USB	2 x USB 2.0
	IPMI via OPMA slot	Optional
Expansion	PCIe	2 x PCI-E * 8 (via 1 x PCI-E * 4 signal) (Optional with RC-3210A)
	PCI	N/A
Cooling	Processor	2U CPU heat-sink
	System	3 x 13000rpm System 2U Fan
Environmental Parameters	Temperature, ambient operating / storage	0 ~ 40° C / -20~70° C
	Humidity (RH), ambient operating / ambient non-operating	5~90%, non-condensing
Miscellaneous	LCD Module	2 x 20 characters
	Watchdog	Yes
	Internal RTC with Li Battery	Yes
Physical Dimensions	Dimensions (WxHxD)	444 x 550.2 x 87.8 mm
	Weight	20 kg
Power	Type / Watts	350W Redundant Power Supply
	Input	100~240V ~ 5-3A, 60-50Hz
Approvals and Compliance		CE, FCC Class A

Ordering Information

FX-3210	2U Rackmount network appliance with storage and Intel Sandy Bridge/Ivy Bridge processor in LGA 1155