# FU-48SDF-x30M5yF

**1.3 μm DFB-LD MODULE WITH SINGLEMODE FIBER PIGTAIL**

## DESCRIPTION

Module type FU-48SDF-x30M5yF is a cooled butterfly packaged 1.3μm DFB-LD module with single-mode optical fiber.
This module is suitable for a light source of analog applications such CATV systems.

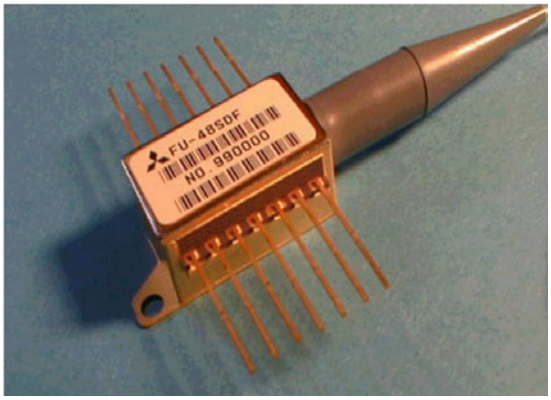


## FEATURES

- High liniality multi quantum wells (MQW) DFB-LD
- Emission wavelength is in 1.3μm band
- Built-in optical isolator
- Thermo electric cooler for laser temperature control
- With photodiode for optical output monitor
- RoHS (2002/95/EC) compliant

## APPLICATION

CATV.
Analog transmission systems

## ABSOLUTE MAXIMUM RATINGS (Tld=25°C)

| Parameter | | Symbol | Conditions | | Rating | Unit |
|---|---|---|---|---|---|---|
| Laser diode | Optical output power from fiber end | Pf | CW | -x30M56F | 8 | mW |
| | | | | -x30M57F | 10 | |
| | | | | -x30M52F<br>-x30M53F<br>-x30M54F | 20 | |
| | Forward current | If | CW | | 150 | mA |
| | Reverse voltage | Vrl | - | | 2 | V |
| Photodiode | Reverse voltage | Vrd | - | | 20 | V |
| | Forward current | Ifd | - | | 2 | mA |
| Cooler (Note) | Voltage | Vpem | - | | 2.4 | V |
| | Current | Ipem | - | | 1.2 | A |
| Operating case temperature | | Tc | - | | -20 to +65 | °C |
| Storage temperature | | Tstg | - | | -40 to +70 | °C |

Note. Even if the thermo-electric cooler (TEC) is operated within the rated conditions, uncontrolled current loading or operation without heat sink may easily damage the module by exceeding the storage temperature range. Thermistor resistance should be properly monitored by the feedback circuit during TEC operation to avoid the catastrophic damage.

Mitsubishi Electric Corporation reserves the right to make changes to the products or information contained herein without notice. No liability is assumed as a result of their use or application.

MITSUBISHI CONFIDENTIAL

# FU-48SDF-x30M5yF

**1.3 μm DFB-LD MODULE WITH SINGLEMODE FIBER PIGTAIL**

**ELECTRICAL/OPTICAL CHARACTERISTICS** (Tld=25°C, Tc=25°C, unless otherwise noted)

| Parameter | Symbol | Condition | | Limits | | | Units |
|---|---|---|---|---|---|---|---|
| | | | | Min. | Typ. | Max. | |
| Threshold Current | Ith | CW | | - | 10 | 30 | mA |
| Operating Current | Iop | CW | | Please see 'Type vs. CATV performance' | | | mA |
| Operating Voltage | Vop | CW, If = Iop (Note1) | | - | 1.3 | 1.8 | V |
| Output Power from Fiber End | Pf | CW, If = Iop | | Please see 'Type vs. CATV performance' | | | mW |
| Input impedance | Zin | If=Iop | | - | 25 | - | Ω |
| Central Wavelength | λc | CW, If = Iop | | 1290 | 1310 | 1330 | nm |
| Side Mode Suppression Ratio | Sr | CW, If = Iop | | 30 | 35 | - | dB |
| Cut-off Frequency | fc(-1.5dB) | If = Iop | | 3 | 4 | - | GHz |
| Composite Second Order | CSO | NTSC 79channel loading 55.25MHz~745.25MHz (6MHz spacing) If = Iop (Note2) | | - | - | -60 | dBc |
| Composite Triple Order | CTB | | | - | - | -65 | dBc |
| Carrier to Noise Ratio | CNR | | | Please see 'Type vs. CATV performance' | | | dB |
| Optical Modulation Depth | m | | | 3.0 | 3.5 | 5.0 | % |
| RIN (Note 3) | Nr | CW, If = Iop | f=55.25MHz | - | -160 | -155 | dB/Hz |
| | | | f=547.25MHz | - | -160 | -155 | |
| Tracking Error(Note 4) | Er | Tc = -20~65°C, APC, ATC | | - | 0.3 | 0.5 | dB |
| Differential Efficiency | η | If(average) = Iop | | Please see 'Type vs. CATV performance' | | | mW/mA |
| Monitor Current | Imon | CW, If = Iop, Vrd = 5V | | 0.1 | - | 3 | mA |
| Dark current( PD ) | Id | Vrd = 5V | | - | 0.1 | 1 | μA |
| Capacitance ( PD ) | Ct | Vrd = 5V, f = 1MHz | | - | 10 | 20 | pF |
| Isolation | Iso | Tc = 0 to 65°C | | 25 | 37 | - | dB |

Note1. If : LD forwad current

Note2. Detailed test condition:

Total loss includes the fiber loss. (Please see 'Type vs. performance'.)

Receiver responsively = 0.9A/W

Input equivalent noise current = 7pA(Hz)$^{1/2}$

Optical return loss of the connector should be greater than 40dB in order to get the specification performance.

Note3. Relative intensity noise does not include shot noise of receiver.

Note4. Er = MAX | 10*log(Pf/Pf(25°C))|

**TYPE VS. CATV PERFORMANCE** (Tld=25°C, Tc=25°C Unless otherwise noted)

| Type | Pf[mW] | Iop[mA] | | CNR[dB] | η[mW/mA] | | Total loss[dB] | |
|---|---|---|---|---|---|---|---|---|
| | | Typ. | Max | Min | Min. | Typ. | | Fiber length |
| FU-48SDF-x30M56F | 2~4 | 35 | 80 | 49 | 0.03 | 0.10 | 5 | 5km |
| FU-48SDF-x30M57F | 4~6 | 35 | 80 | 48 | 0.11 | 0.20 | 8.5 | 15km |
| FU-48SDF-x30M52F | 6~8 | 40 | 70 | 49.5 | 0.15 | 0.23 | 8.5 | 15km |
| FU-48SDF-x30M53F | 8~10 | 40 | 70 | 50 | 0.2 | 0.30 | 12 | 26.5km |
| FU-48SDF-x30M54F | 10~12 | 45 | 70 | 50.5 | 0.2 | 0.30 | 12 | 26.5km |

Mitsubishi Electric Corporation reserves the right to make changes to the products or information contained herein without notice. No liability is assumed as a result of their use or application.

MITSUBISHI CONFIDENTIAL

# FU-48SDF-x30M5yF

**1.3 μm DFB-LD MODULE WITH SINGLEMODE FIBER PIGTAIL**

**THERMAL CHARACTERISTICS** (Tld=25°C,Tc=-20~+65°C)

| Parameter | Symbol | Conditions | Limits | | | Units |
|---|---|---|---|---|---|---|
| | | | Min. | Typ. | Max. | |
| Thermistor resistance | Rth | Tld=25°C | 9.5 | 10 | 10.5 | KΩ |
| B constant of thermistor resistance | B | - | - | 3950 | - | K |
| Cooling capacity | ΔT | Tc=65°C | 40 | - | - | K |
| Cooler current | Ipe | ΔT=40K | - | 0.6 | 1 | A |
| Cooler voltage | Vpe | ΔT=40K | - | 1.2 | 2 | V |

**OPTICAL FIBER SPECIFICATION**

| Parameter | Limits | Unit |
|---|---|---|
| Type | SM | - |
| Mode filed diameter | 9.5±1 | μm |
| Cladding diameter | 125±2 | μm |
| Jacket diameter | 900 typ. | μm |
| Connector type | Pigtail without fiber, SC/PC, SC/APC, FC/APC<br>Please see ' FC/APC connector specification' | - |
| Fiber pintail length | Lfiber = 1000+200/-0<br>(Lfiber is defined in the outline drawing.) | mm |
| Optical return loss to connector | SC/PC : 50dB min | - |
| | SC/APC and FC/APC : 60dB min | - |

**FC/APC CONNECTOR SPECIFICATION**

**(1) FC/APC CONNECTOR PARTS**

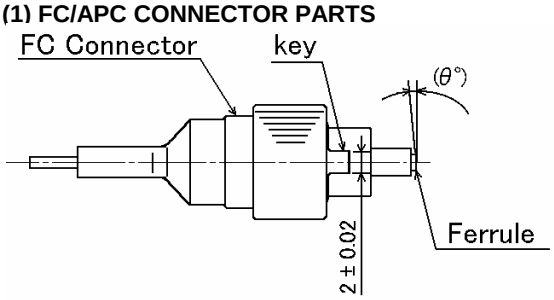


| Part | Maker | Part No. |
|---|---|---|
| FC connector | SEIKOH GIKEN | PF11A |
| Ferrule | | FF3A |

**(2) FERRULE ENDFACE GEOMETRY**

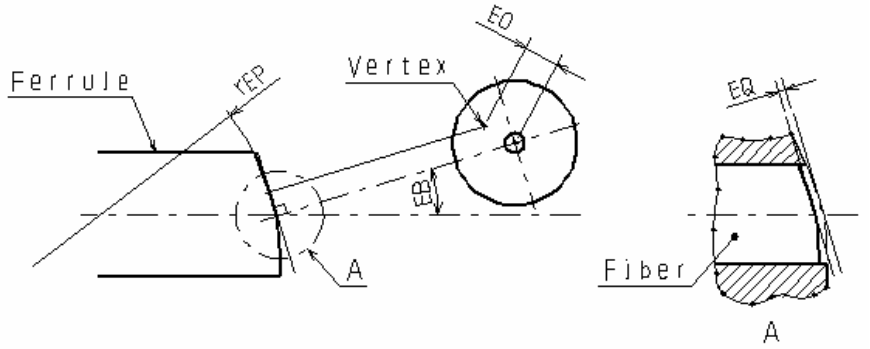


| Reference | Dimensions |
|---|---|
| EB | 8° |
| EO | 50μmMAX |
| rEP | 5~12mm |
| EQ | ±0.1μm |

Mitsubishi Electric Corporation reserves the right to make changes to the products or information contained herein without notice. No liability is assumed as a result of their use or application.

MITSUBISHI CONFIDENTIAL

# FU-48SDF-x30M5yF

**1.3 μm DFB-LD MODULE WITH SINGLEMODE FIBER PIGTAIL**

**DOCUMENTATION**

- Threshold current(Ith) at Tc=25°C
- Operating current(Iop) at Tc=25°C
- Optical output power form fiber end(Pf) at Tc=25°C
- Central wavelength(λc) at Tc=25°C
- Monitor current(Imon) at Tc=25°C
- Differential efficiency(η) at Tc=25°C
- Side mode suppression ratio(Sr) at Tc=25°C
- Optical modulation(m) at Tc=25°C
- RF input power(RFin) at Tc=25°C
- Composite second order(CSOL2, CSOH41, CSOH78) at Tc=25°C
- Composite triple order(CTB2, CTB41, CTB78) at Tc=25°C
- Carrier to noise ratio(CNR2, CNR41, CNR78) at Tc=25°C
- Relative intensity noise(Nr2, Nr78) at Tc=25°C
- Pf - If graph at Tc=-20, 25, 65°C
- If - Vf graph at Tc=25°C
- dPf/dIf - If graph at Tc=25°C
- If - Imon graph at Tc=25°C

**ORDERING INFORMATION**

**FU - 48SDF – _ 30M5_ F**

| | Output Power Range |
|---|---|
| 6 | 2~4mW |
| 7 | 4~6mW |
| 2 | 6~8mW |
| 3 | 8~10mW |
| 4 | 10~12mW |

| | Connector |
|---|---|
| W | SC/PC |
| L | SC/APC |
| Y | FC/APC |

Mitsubishi Electric Corporation reserves the right to make changes to the products or information contained herein without notice. No liability is assumed as a result of their use or application.

MITSUBISHI CONFIDENTIAL

# FU-48SDF-x30M5yF

**1.3 μm DFB-LD MODULE WITH SINGLEMODE FIBER PIGTAIL**

## OUTLINE DIAGRAM

Unless otherwise noted +/-0.5mm
(Unit : mm)

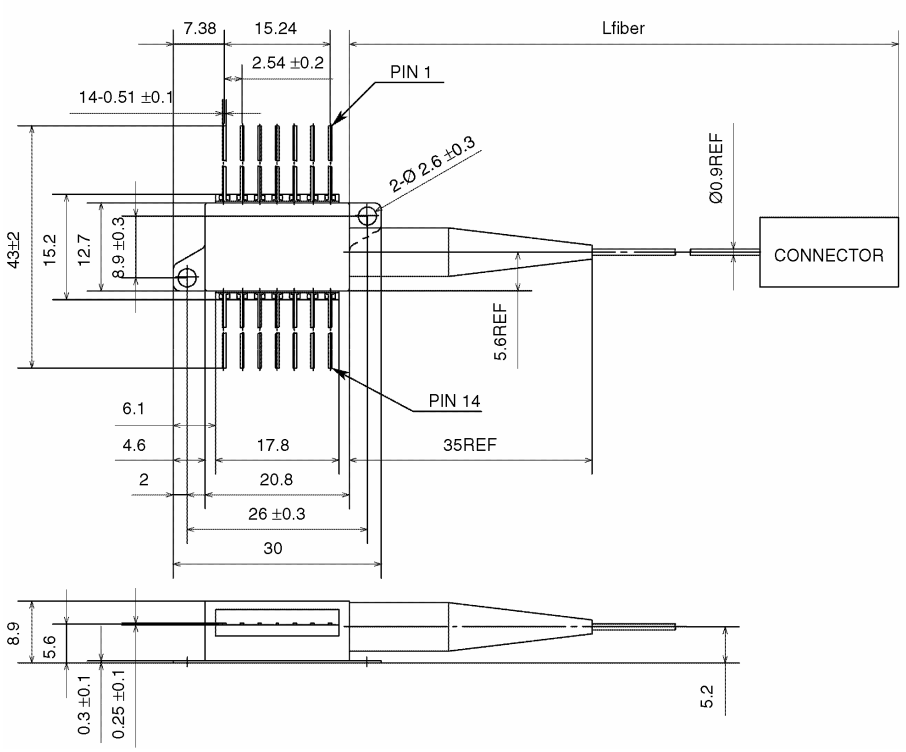


| PIN | FUNCTION |
|---|---|
| 1 | THERMISTOR |
| 2 | THERMISTOR |
| 3 | LD BIAS (-) |
| 4 | PD ANODE |
| 5 | PD CATHODE |
| 6 | COOLER ANODE |
| 7 | COOLER CATHODE |
| 8 | GND |
| 9 | GND |
| 10 | NC |
| 11 | LD ANODE, GND |
| 12 | LD RF |
| 13 | LD ANODE, GND |
| 14 | NC |

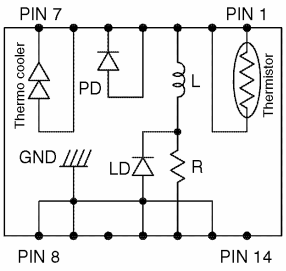


**FU-48SDF-x30M5yF**

Mitsubishi Electric Corporation reserves the right to make changes to the products or information contained herein without notice. No liability is assumed as a result of their use or application.

MITSUBISHI CONFIDENTIAL

# FU-48SDF-x30M5yF

**1.3 μm DFB-LD MODULE WITH SINGLEMODE FIBER PIGTAIL**

## Safety Cautions for Use of Optoelectronic Devices

### General:

Although the manufacturer is always striving to improve the reliability of its product, problems and errors may occur with semiconductor products. Therefore, the user's products are required to be designed with full safety regard to prevent any accidents that results in injury, death, fire or environmental damage even when semiconductor products happen to error. Especially it is recommended to take in consideration about redundancy, fire prevention, error prevention safeguards. And the following requirements must be strictly observed.

### Warning!

**1. Eye safety :** Seminductor laser radiates laser light during operation. Laser light is very dangerous when shot directly into human eyes. Don't look at laser light directly, or through optics such as a lens. The laser light should be observed using the ITV camera, IR-viewer, or other appropriate instruments.

**2. Product handling :** The product contains GaAs (gallium arsenide). It is safe for regular use, but harmful to the human body if made into powder or steam. Be sure to avoid dangerous process like smashing, burning, chemical etching. Never put this product in one's mouth or swallow it.

**3. Product disposal :** This product must be disposed of as special industrial waste. It is necessary to separate it from general industrial waste and general garbage.

## Handling Cautions for Optoelectronic Devices

### 1. General:

**(1)** The products described in this specification are designed and manufactured for use in general communication systems or electronic devices, unless their applications or reliability are otherwise specified. Therefore, they are not designed or manufactured for installation in devices or systems that may affect human life or that are used in social infrastructure requiring high reliability.

**(2)** When the customer is considering to use the products in special applications, such as transportation systems (automobiles, trains, vessels), medical equipments, aerospace, nuclear power control, and submarine repeaters or systems, please contact Mitsubishi Electric or an authorized distributor.

### 2. Shipping Conditions:

**(1)** During shipment, place the packing boxes in the correct direction, and fix them firmly to keep them immovable. Placing the boxes upside down, tilting, or applying abnormal pressure onto them may cause deformation in the electrode terminals, breaking of optical fiber, or other problems.

**(2)** Never throw or drop the packing boxes. Hard impact on the boxes may cause break of the devices.

**(3)** Take strict precautions to keep the devices dry when shipping under rain or snow.

### 3. Storage Conditions:

When storing the products, it is recommended to store them following the conditions described below without opening the packing. Not taking enough care in storing may result in defects in electrical characteristics, soldering quality, visual appearance, and so on. The main points are described below (if special storage conditions are given to the product in the specification sheet, they have priority over the following general cautions):

**(1)** Appropriate temperature and humidity conditions, i.e., temperature range between 5~30°C, and humidity between 40~60 percent RH, should be maintained in storage locations. Controlling the temperature and humidity within this range is particularly important in case of long-term storage for six months or more.

**(2)** The atmosphere should be particularly free from toxic gases and dust.

**(3)** Do not apply any load on the product.

**(4)** Do not cut or bend the leads of the devices which are to be stored. This is to prevent corrosion in the cut or bent part of the lead causing soldering problems in the customer's assembling process.

**(5)** Sudden change in temperature may cause condensation in the product or packing, therefore, such locations should be avoided for storing. Temperature in storage locations should be stable.

**(6)** When storing ceramic package products for extended periods of time, the leads may turn reddish due to reaction with sulfur in the atmosphere.

**(7)** Storage conditions for bare chip and unsealed products shall be stated separately because bare chip and unsealed products require stricter controls than package sealed products.

### 4. Design Conditions and Environment under Use:

**(1)** Avoid use in locations where water or organic solvents adhere directly to the product, or where there is any possibility of the generation of corrosive gas, explosive gas, dust, salinity, or other troublesome conditions. Such environments will not only significantly lower the reliability, but also may lead to serious accidents.

**(2)** Operation in excess of the absolute maximum ratings can cause permanent damage to the device. The customers are requested to design not to exceed those ratings even for a short time.

### 5. ESD Safety Cautions:

The optoelectronic devices are sensitive to static electricity (ESD, electro-static discharge). The product can be broken by ESD. When handling this product, please observe the following countermeasures:

<Countermeasures against Static Electricity and Surge>

To prevent break of devices by static electricity or surge, please adopt the following countermeasures in the assembly line:

**(1)** Ground all equipments, machinery jigs, and tools in the process line with earth wires installed in them. Take particular care with hot plates, solder irons and other items for which the commercial power supplies are prone to leakage.

**(2)** Workers should always use earth bands. Use of antistatic clothing, electric conductive shoes, and other safety equipment while at work is highly recommended.

**(3)** Use conductive materials for this product's container, etc.

**(4)** It is recommended that grounding mats be placed on the surfaces of assembly line workbench and the surrounding floor in work area, etc.

**(5)** When mounting this product in parts or materials which can be electrically charged (printed wiring boards, plastic products, etc.), pay close attention to the static electricity in those parts. ESD may damage the product.

**(6)** Humidity in working environment should be controlled to be 40 percent RH or higher.

These countermeasures are most general, and there is a need to carefully confirm the line before starting mass production using this product (in the trial production, etc.). It is extremely important to prevent surge, eliminate it rapidly, and prevent it from spreading.

Mitsubishi Electric Corporation reserves the right to make changes to the products or information contained herein without notice. No liability is assumed as a result of their use or application.

MITSUBISHI CONFIDENTIAL