40V N-Channel MOSFETs

General Description

These N-Channel enhancement mode power field effect transistors are using trench DMOS technology. This advanced technology has been especially tailored to minimize on-state resistance, provide superior switching performance, and withstand high energy pulse in the avalanche and commutation mode. These devices are well suited for high efficiency fast switching applications.

BVDSS	RDSON	ID
40V	5.5mΩ	80A

Features

- *40V, 80A, RDS(ON)=5.5mΩ@VGS = 10V*
- *Improved dv/dt capability*
- *Fast switching*
- *Green Device Available*

TO-252 Pin Configuration

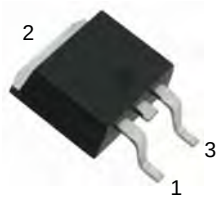

1. Gate
2. Drain
3. Source

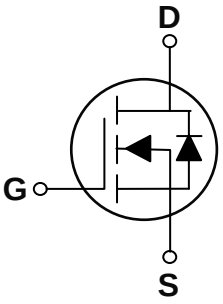

Applications

- *Notebook*
- *Load Switch*
- *LED applications*
- *Hand-Held Device*

Absolute Maximum Ratings (Tc=25℃ unless otherwise noted)

Symbol	Parameter	Rating	Units
V_{DS}	Drain-Source Voltage	40	V
V_{GS}	Gate-Source Voltage	± 20	V
I_D	Drain Current – Continuous (T_C=25℃)	80	A
	Drain Current – Continuous (T_C=100℃)	50	A
I_{DM}	Drain Current – Pulsed[1]	320	A
P_D	Power Dissipation (T_C=25℃)	88	W
	Power Dissipation – Derate above 25℃	0.59	W/℃
T_{STG}	Storage Temperature Range	-55 to 150	℃
T_J	Operating Junction Temperature Range	-55 to 150	℃

Thermal Characteristics

Symbol	Parameter	Typ.	Max.	Unit
$R_{\theta JA}$	Thermal Resistance Junction to ambient	---	62	℃/W
$R_{\theta JC}$	Thermal Resistance Junction to Case	---	1.7	℃/W

40V N-Channel MOSFETs

Electrical Characteristics (T_J=25 ℃, unless otherwise noted)

Off Characteristics

Symbol	Parameter	Conditions	Min.	Typ.	Max.	Unit
BV_{DSS}	Drain-Source Breakdown Voltage	V_{GS}=0V , I_D=250uA	40	---	---	V
$\triangle BV_{DSS}/\triangle T_J$	BV_{DSS} Temperature Coefficient	Reference to 25℃ , I_D=1mA	---	0.03	---	V/℃
I_{DSS}	Drain-Source Leakage Current	V_{DS}=40V , V_{GS}=0V , T_J=25℃	---	---	1	uA
		V_{DS}=32V , V_{GS}=0V , T_J=85℃	---	---	10	uA
I_{GSS}	Gate-Source Leakage Current	V_{GS}=± 20V , V_{DS}=0V	---	---	± 100	nA

On Characteristics

$R_{DS(ON)}$	Static Drain-Source On-Resistance	V_{GS}=10V , I_D=20A	---	4.2	5.5	mΩ
		V_{GS}=4.5V , I_D=10A	---	5.3	7	mΩ
$V_{GS(th)}$	Gate Threshold Voltage	V_{GS}=V_{DS} , I_D =250uA	1.0	1.6	2.5	V
$\triangle V_{GS(th)}$	$V_{GS(th)}$ Temperature Coefficient		---	-5	---	mV/℃
gfs	Forward Transconductance	V_{DS}=10V , I_D=10A	---	16	---	S

Dynamic and switching Characteristics

Q_g	Total Gate Charge[2,3]	V_{DS}=32V , V_{GS}=4.5V , I_D=10A	---	25	50	nC
Q_{gs}	Gate-Source Charge[2,3]		---	6.4	13	
Q_{gd}	Gate-Drain Charge[2,3]		---	12.1	24	
$T_{d(on)}$	Turn-On Delay Time[2,3]	V_{DD}=20V, V_{GS}=10V , R_G=3.3Ω I_D=1A	---	14.2	28	ns
T_r	Rise Time[2,3]		---	18.3	36	
$T_{d(off)}$	Turn-Off Delay Time[2,3]		---	38.8	76	
T_f	Fall Time[2,3]		---	13.9	28	
C_{iss}	Input Capacitance	V_{DS}=25V , V_{GS}=0V , F=1MHz	---	2410	3600	pF
C_{oss}	Output Capacitance		---	233	400	
C_{rss}	Reverse Transfer Capacitance		---	152	230	
R_g	Gate resistance	V_{GS}=0V, V_{DS}=0V, F=1MHz	---	1.6	3.2	Ω

Drain-Source Diode Characteristics and Maximum Ratings

Symbol	Parameter	Conditions	Min.	Typ.	Max.	Unit
I_S	Continuous Source Current	V_G=V_D=0V , Force Current	---	---	80	A
I_{SM}	Pulsed Source Current		---	---	160	A
V_{SD}	Diode Forward Voltage	V_{GS}=0V , I_S=1A , T_J=25℃	---	---	1	V

Note :
1. Repetitive Rating : Pulsed width limited by maximum junction temperature.
2. The data tested by pulsed , pulse width ≦ 300us , duty cycle ≦ 2%.
3. Essentially independent of operating temperature.

40V N-Channel MOSFETs

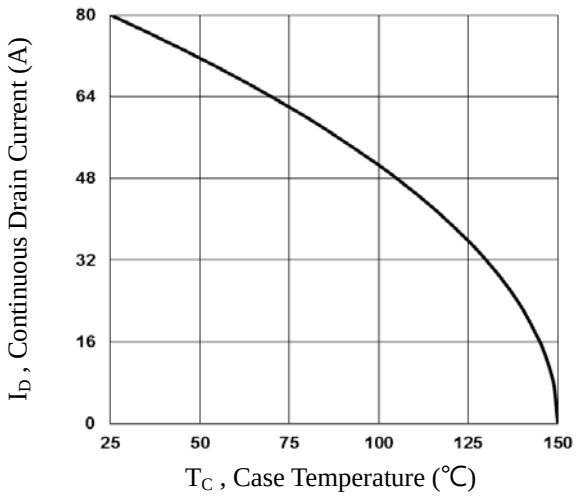

Fig.1 Continuous Drain Current vs. T_C

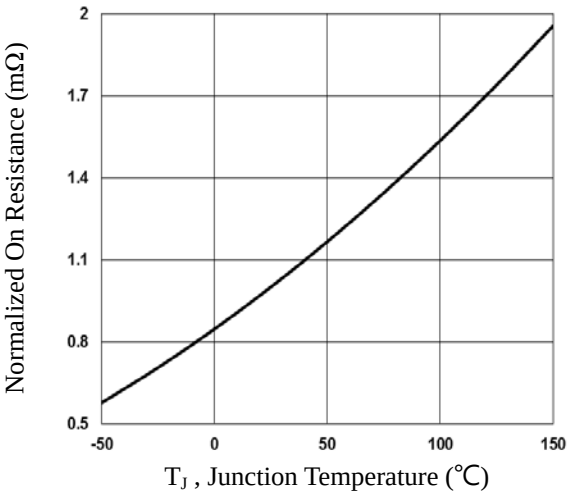

Fig.2 Normalized RDSON vs. T_J

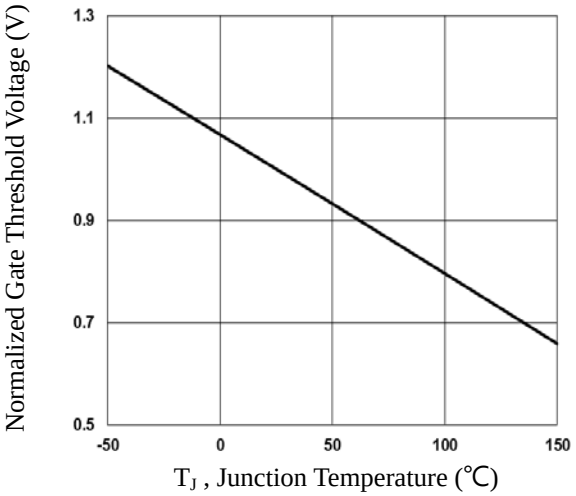

Fig.3 Normalized V_{th} vs. T_J

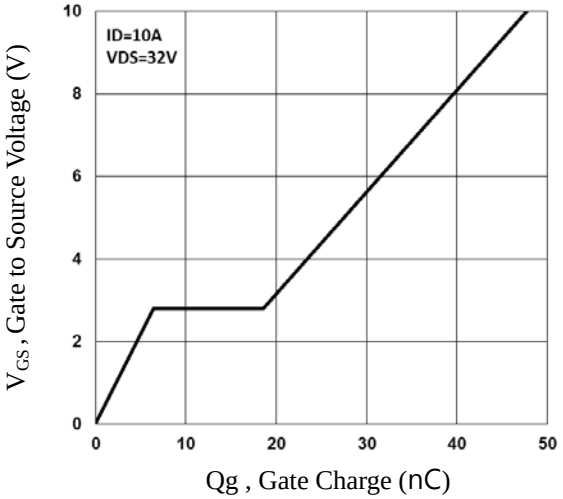

Fig.4 Gate Charge Waveform

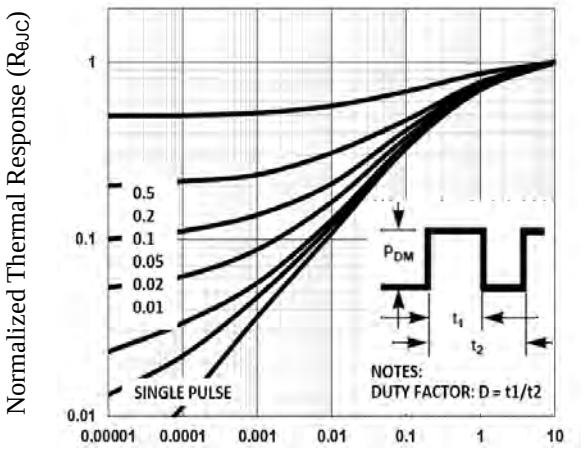

Fig.5 Normalized Transient Impedance

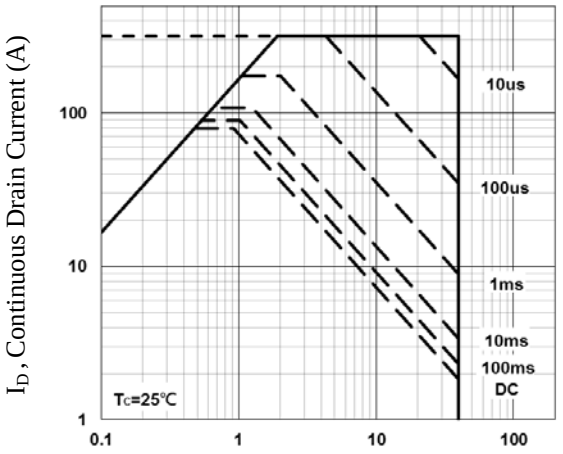

Fig.6 Maximum Safe Operation Area

40V N-Channel MOSFETs

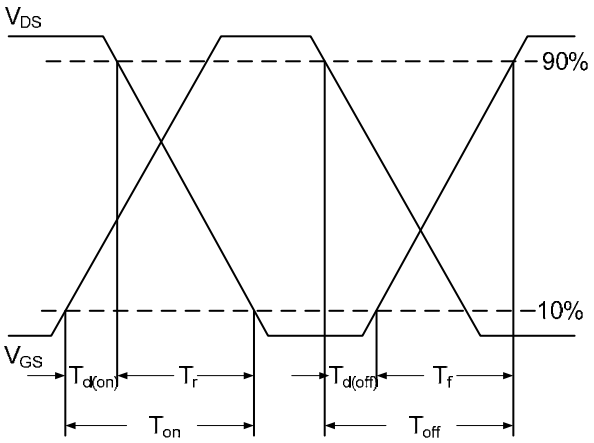

Fig.7 Switching Time Waveform

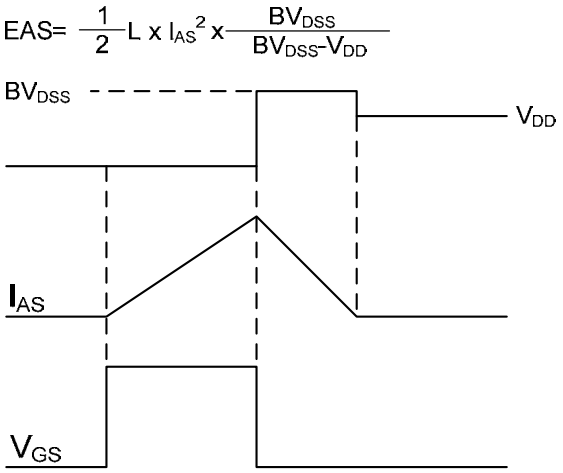

Fig.8 EAS Waveform

40V N-Channel MOSFETs

TO-252 PACKAGE INFORMATION

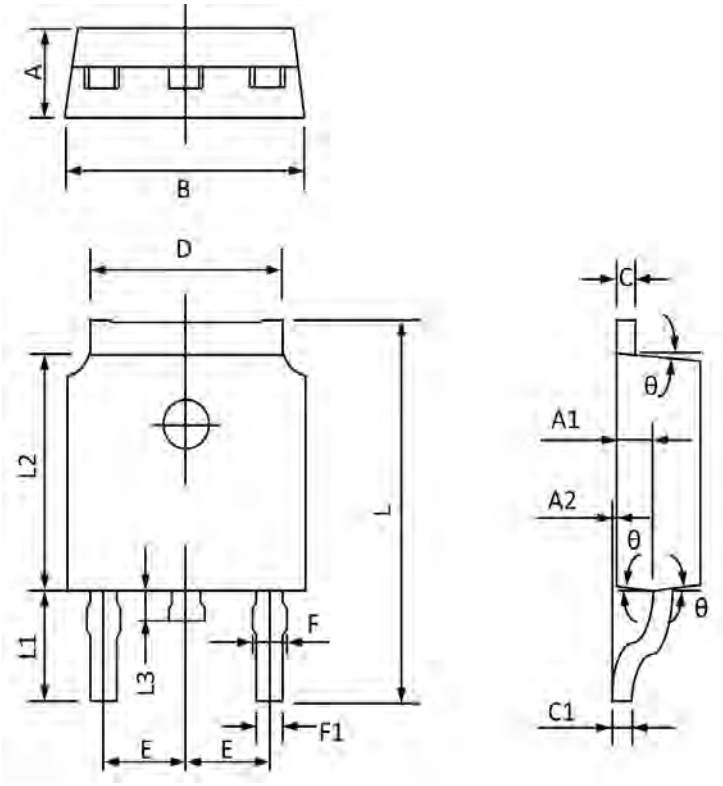

Symbol	Dimensions In Millimeters		Dimensions In Inches	
	MAX	MIN	MAX	MIN
A	2.400	2.200	0.094	0.087
A1	1.110	0.910	0.044	0.036
A2	0.150	0.000	0.006	0.000
B	6.800	6.400	0.268	0.252
C	0.580	0.450	0.023	0.018
C1	0.580	0.460	0.023	0.018
D	5.500	5.100	0.217	0.201
E	2.386	2.186	0.094	0.086
F	0.940	0.600	0.037	0.024
F1	0.860	0.500	0.034	0.020
L	10.400	9.400	0.409	0.370
L1	3.000	2.400	0.118	0.094
L2	6.200	5.400	0.244	0.213
L3	1.200	0.600	0.047	0.024
θ	9°	3°	9°	3°