Data Sheet

DIODE TRIO
LUCAS TYPE

Description



DR-1300

Mechanical Dimensions

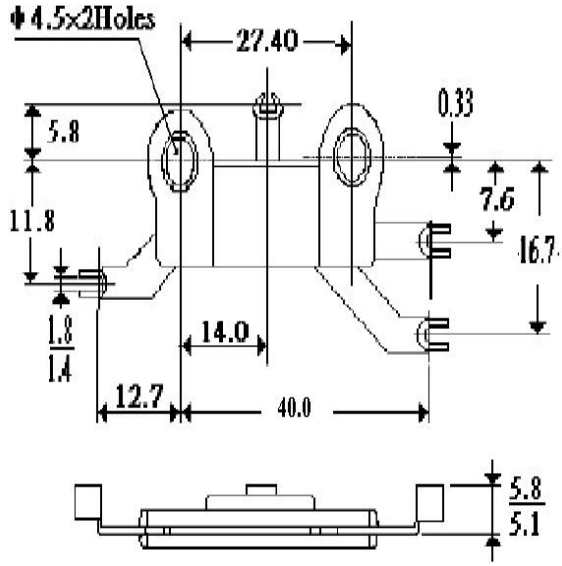

Dimensions in inches and (millimeters)

Features

- ✶ Low forward voltage drop
- ✶ High current capability
- ✶ High reliability
- ✶ High surge current capability

Mechanical Data

- ✶ Case: OFC Heat Sink
- ✶ Encap: Epoxy Sealed Rated UL94V-0
- ✶ Weight: 6.4 gram

MAXIMUM RATINGS AND ELECTRICAL CHARACTERISTICS

Rating at 25°C ambient temperature unless otherwise specified.

	SYMBOL	FTD1300	UNIT
DC Reverse Voltage, VR	V_R	200	V
Peak forward surge current 8.3ms single half sine wave	IFSM	150	A
Peak Rectifier Forward Current Alternator Rated Current	$I_{(AV)}$	5.0	A
Maximum Inst. Forward Voltage Drop, I_F at 80Amp	V_F	1.05	V
Maximum DC Reverse Current (V_B)@T_J=25°C (V_B)@T_J=100°C	I_R	5 / 500	uA
Operating Junction and Storage Temperature Range	T_J, T_{STG}	-40 to +155	°C