Low-Power Off-Line CC/CV Controller

FEATURES

- Constant-Current (CC) and Constant-Voltage (CV) with Primary Side Control
- Proprietary technology enabling high efficiency and fast dynamic response
- No audible noise over entire operating range
- Applications from 1W to more than 18W output
- Direct drive of BJT or MOS switch
- Built-in Cable Compensation
- Built-in Line Compensation
- Primary-side feedback eliminates opto-coupler and TL431
- Cycle-by-Cycle Current Limiting
- Over Temperature Protection
- VCC Over Voltage Protection
- Open Circuit Protection

TYPICAL APPLICATION

- Adapter/Charger for Cell/Cordless Phones, PDAs, MP3 and Other Portable Apparatus
- Standby and Auxiliary Power Supplies Set Top Boxes (STB)
- AC/DC LED Driver applications

DESCRIPTION

The FT838D/FT838R controller device is optimized for high-performance, low power switching mode power supply applications. The FT838D/FT838R facilitates CC/CV charger design by eliminating an opto-coupler and TL431. Its highly integrated functions such as Under Voltage Lockout (UVLO), Leading Edge Blanking (LEB) and built-in cable compensation offer the users a high efficiency and low cost solution for AC/DC power applications.

Power supplies built with FT838D can achieve both highest average efficiency and fast dynamic load response. FT838R is optimized for LED driver applications with slightly higher (~22uA) standby current.

Furthermore, FT838D/FT838R features fruitful protections like Open Circuit Protection and Over Temperature Protection to eliminate the external protection circuits and provide reliable operations. FT838D/FT838R is avilabel in SOT23-5 package.

Fremont USA Use Only

TYPICAL APPLICATION CIRCUIT

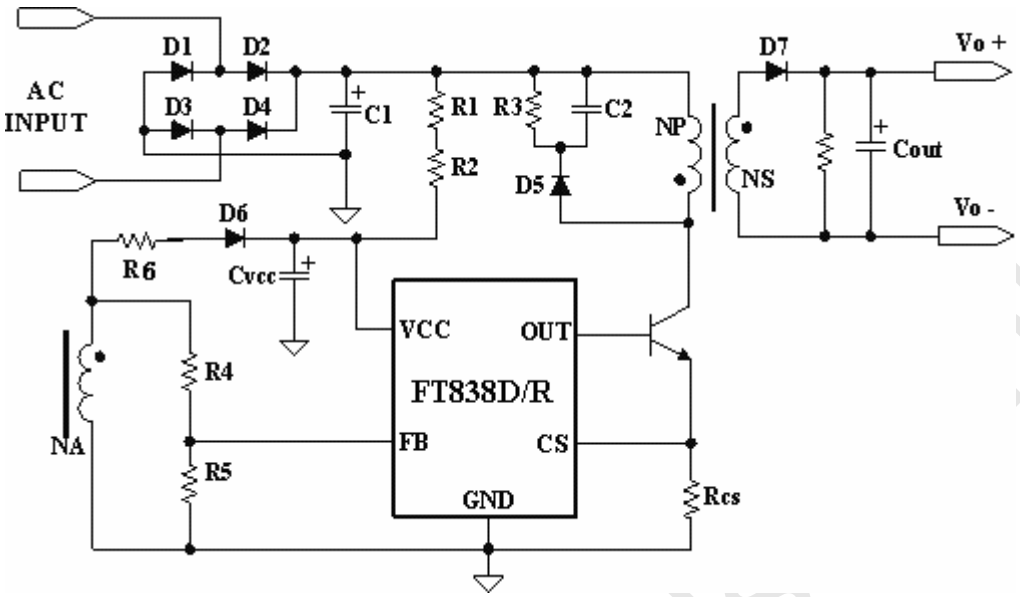

Figure 1: Typical Application Circuit

ABSOLUTE MAXIMUM RATINGS

FB to GND..... -0.3V to +7V
CS to GND.....-0.3V to +7V
VCC to GND.....-0.3V to +30V
OUT to GND.....-0.3V to +7V
Operating Temperature Range.....-40℃ to +125℃
Junction Temperature..... -40℃ to +150℃
Storage Temperature Range .....-60℃ to +150℃
ESD Protection HBM.....2000V
ESD Protection MM.....200V

Stresses exceeding Maximum Ratings may damage the device. Maximum Ratings are stress ratings only. Functional operation above the Recommended Operating Conditions is not implied. Extended exposure to stresses above the Recommended Operating Conditions may affect device reliability.

Fremont USA Use Only

PIN CONFIGURATION

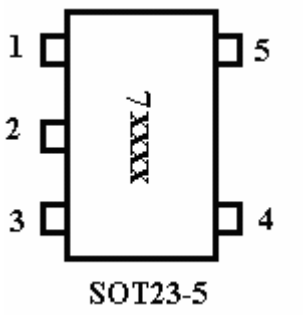

Figure 2: Pin Assignments

Pin Definition

Pin #.	Name	I/O	Pin Description
1	FB	I	Output voltage feedback pin
2	GND	I	Ground.
3	CS	I	Primary current sense
4	OUT	O	NPN base or MOS gate driver
5	VCC	I	Supply voltage

Table1: Pin Definition

ORDERING INFORMATION

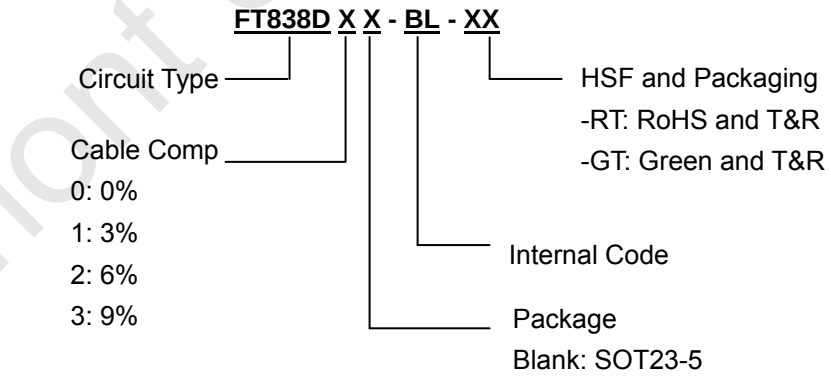

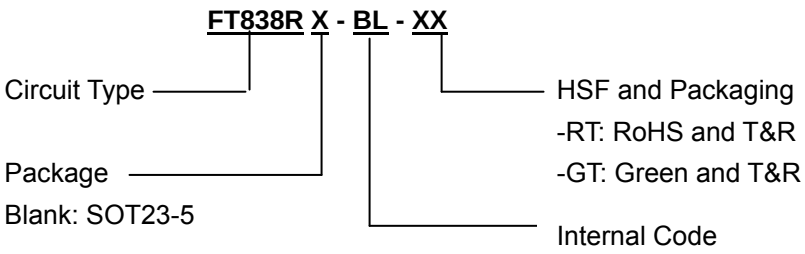

Fremont USA Use Only

Device	DESIGNATOR	SYMBOL	Options
FT838D①	①	0	Cable Comp = 0%
		1	Cable Comp = 3%
		2	Cable Comp = 6%
		3	Cable Comp = 9%
FT838R	／	／	Cable Comp = 0% For LED driver applications

Table 2

MARKING RULE

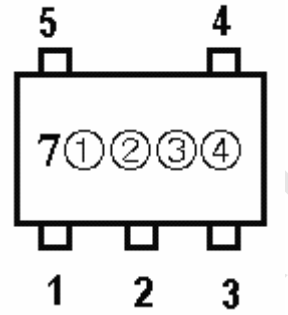

Figure 3 marking rule

①: Represents Version (0,1,2 or 3)
②: Represents Device (D or R)
③④: for internal reference

Fremont Use Only

BLOCK DIAGRAM

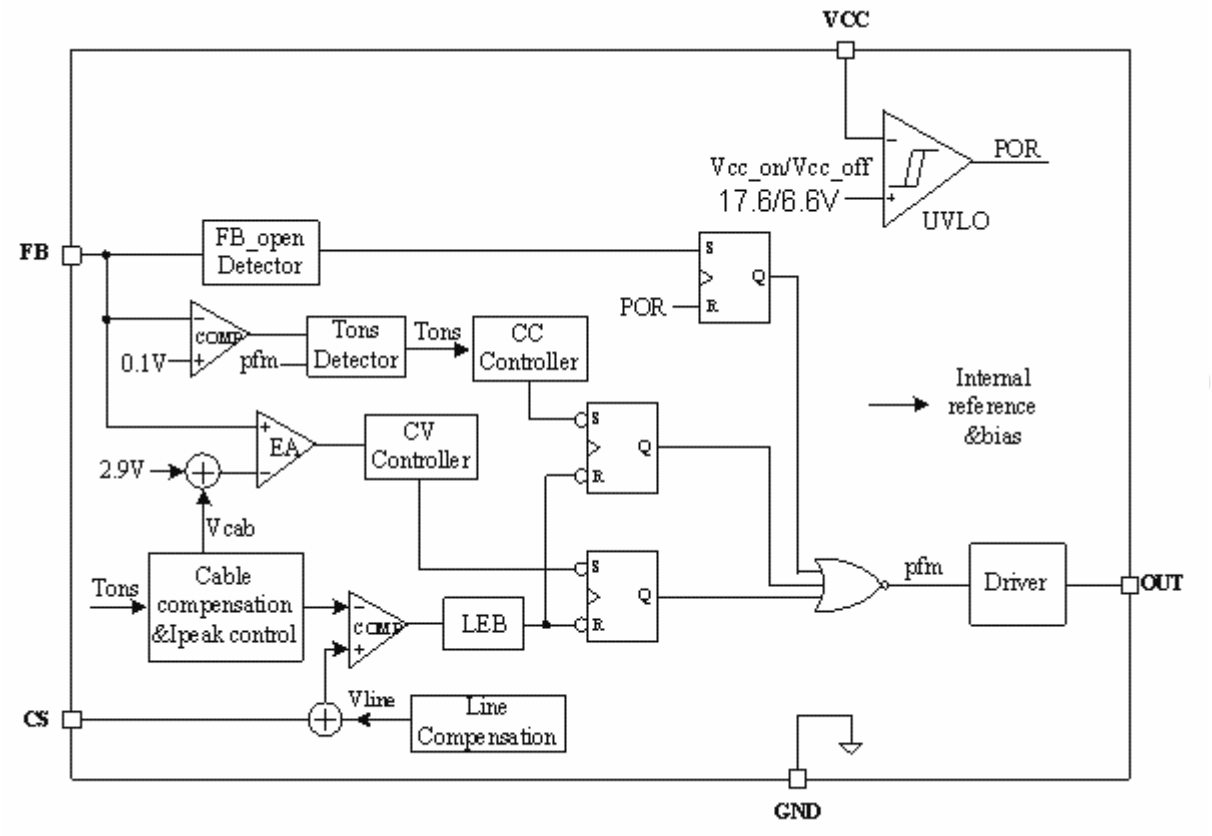

Figure 4: FT838D/FT838R Block Diagram

Fremont USA

ELECTRICAL CHARACTERISTICS

(For typical values Tj=25℃, Vcc=12V, unless otherwise noted**)**

Characteristic		Symbol	Min	Typ	Max	Unit
Current Sense						
Maximum Current Threshold		Vcs_max	541	552	563	mV
Leading Edge Blanking Duration		Tleb	350	400	450	ns
Propagation Delay (OUT=1.0nF to GND)		Tpd			200	ns
Feedback Section						
Feedback Voltage Threshold		Vfb	2.856	2.9	2.944	V
CCM protection Threshold Level		Vcp		100		mV
Supply Section						
Start Up Threshold Voltage		Vcc_on	16.5	17.6	18.5	V
Under Voltage Lockout Voltage		Vcc_off	6	6.6	7	V
VCC Start Up Current	FT838D	Istart_up		2	5	uA
	FT838R		14	22	30	
Operating Current		Iop	0.4	0.5	0.7	mA
Protection Section						
Feedback Loop Open Protection		Ifb_open	120	140	160	uA
VCC Over Voltage Protection		Vcc_OVP	26	27.5	29	V
Over Temperature Protection		T_OTP		145		℃
Base Driver						
Output low level ON-resistance		Rdson		2		Ω
Output Maximum Source current		Isource	25	30	35	mA
Output sourcing current after pre-off		Is_preoff		1.4		mA
Output clamp voltage		Vbase		9		V
Compensation						
Line Compensation (Ifb=1mA)		Vline	30	33	36	mV
Cable compensation	0	Kcab		0		%
	1			3		
	2			6		
	3			9		

Table 3

Fremont USA Use Only

FUNCTIONAL DESCRIPTION

Operating Description

FT838D/FT838R is a cost effective and high-performance AC-DC power supply controller for off-line low power AC-DC applications including battery chargers, adaptors and LED lighting. The constant voltage (CV) and constant current (CC) control are achieved accurately without the secondary feedback circuit,.

Start up Control

Start-up current of FT838D is very low so that a start-up resistor with high resistance and low-wattage is allowed to supply the start-up power for the controller. The large value startup resistor minimizes the power loss in operations and allows quick start up. FT838R increases the start-up current slightly to ensure the smooth shutting down operations in LED lighting applications with relaxed requirement on external board design.

Operating current

The operating current of FT838D/FT838R is as low as 500uA. Good efficiency is achieved with the low operating current. Low operating current also reduces the Vcc hold-up capacitance requirement.

Constant voltage (CV) and constant current (CC) Operation

The FT838D/FT838R can accurately achieve CV/CC characteristic output without secondary side voltage and current-feedback circuits. It operates in CV mode to regulate the output voltage by capturing the auxiliary winding feedback voltage at FB pin. The auxiliary winding feedback voltage is proportional to secondary winding, so it provides controller the feedback signal from secondary side and achieves constant-voltage output. In CC mode, the controller detects the secondary discharger peak current and the discharger time, which determines the off-time of the base or gate driver to make the output average current constant.

Primary peak current modulation

Primary peak current is constant at constant current mode. And primary peak current is modulated at constant voltage mode for the purposes of good dynamic load response and no audible noise over entire operating range. According to the output loading current the current threshold voltage is modulated from 0.55V to 0.27V. The current threshold voltage is 0.55V at rated load and 0.27V at light load.

Leading edge blanking

Each time the power transistor is switched on, a turn-on spike occurs at the sense resistor. To avoid premature termination of the switching pulse, a 400ns leading edge blanking time is built in. Conventional RC filtering can therefore be omitted. During this blanking period, the current limit comparator is disabled and cannot switch off the base or gate driver.

Under voltage lockout (UVLO)

FT838D/FT838R turn-on Vcc_on and turn-off Vcc_off are 17.6 V and 6.6 V, respectively. During start-up, the hold-up capacitor must be charged to 17.6V through the start-up resistor. The hold-up capacitor continues to supply Vcc until power can be delivered from the auxiliary winding of the transformer. Vcc must not drop below 6.6 V during this start-up process. This UVLO hysteresis window ensures that hold-up capacitor is sufficient to supply Vcc during start-up.

Fremont USA Use Only

Protection control

With rich protection features of FT838D/FT838R, excellent power supply system reliability can be achieved. The protection features including cycle by cycle current limiting, Vcc over voltage protection and clamp, over temperature protection, feedback loop open circuit protection and Vcc under voltage lockout.

Base or gate driver

To minimize loss in the primary power NPN and to prevent it from secondary breakdown, the driving current profile is carefully controlled. The driving current is nominally 30mA.The FT838D/FT838R can also drive power MOS for high power applications.

Output cable compensation

The output cable compensation provides a constant output voltage at the end of the cable over the entire load rang in constant voltage mode. As the converter load increases from no-load to the peak current load, the voltage drop introduced across the output cable is compensated by increasing the feedback pin reference voltage.

Fremont USA Use Only

PACKAGE INFORMATION

SOT23-5 Package

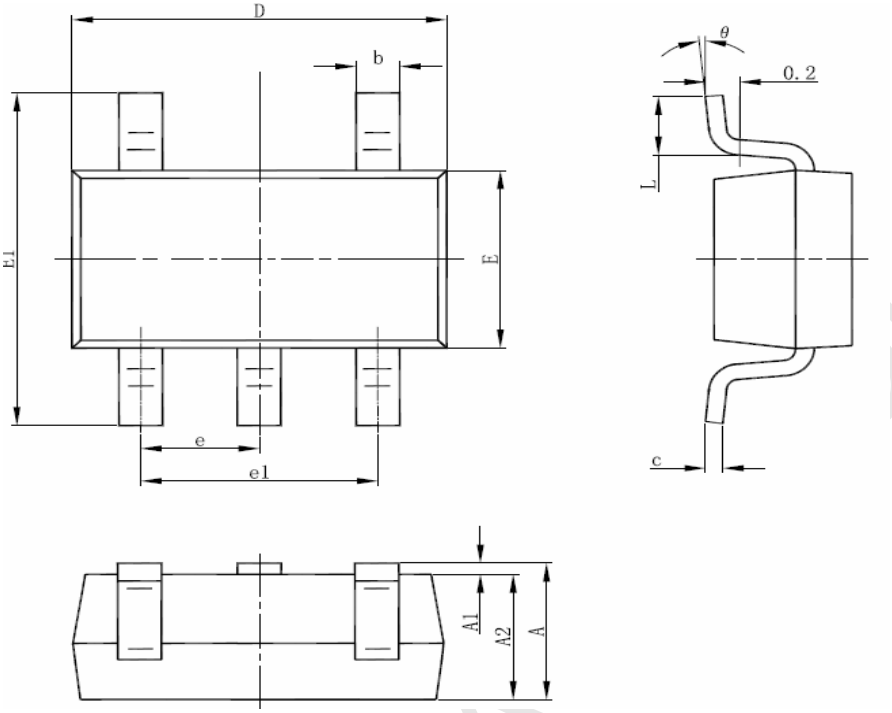

Symbol	Dimensions In Millimeters		Dimensions In Inches	
	Min	Max	Min	Max
A	1.050	1.250	0.041	0.049
A1	0.000	0.100	0.000	0.004
A2	1.050	1.150	0.041	0.045
b	0.300	0.500	0.012	0.020
c	0.100	0.200	0.004	0.008
D	2.820	3.020	0.111	0.119
E	1.500	1.700	0.059	0.067
E1	2.650	2.950	0.104	0.116
e	0.95 (BSC)		0.037 (BSC)	
e1	1.800	2.000	0.071	0.079
L	0.300	0.600	0.012	0.024
θ	0°	8°	0°	6°

Fremont USA Only

Fremont Micro Devices (SZ) Limited

#5-8, 10/F, Changhong Building, Ke-Ji Nan 12 Road, Nanshan District, Shenzhen
Tel: (86 755) 86117811
Fax: (86 755) 86117810

Fremont Micro Devices (Hong Kong) Limited

#16, 16/F, Blk B, Veristrong Industrial Centre, 34-36 Au Pui Wan Street, Fotan, Shatin, Hong Kong
Tel: (852) 27811186
Fax: (852) 27811144

Fremont Micro Devices (USA), Inc.

42982 Osgood Road Fremont, CA 94539
Tel: (1-510) 668-1321
Fax: (1-510) 226-9918

Web Site: http://www.fremontmicro.com/

Fremont USA Use Only

* Information furnished is believed to be accurate and reliable. However, Fremont Micro Devices, Incorporated (BVI) assumes no responsibility for the consequences of use of such information or for any infringement of patents of other rights of third parties which may result from its use. No license is granted by implication or otherwise under any patent rights of Fremont Micro Devices, Incorporated (BVI). Specifications mentioned in this publication are subject to change without notice. This publication supersedes and replaces all information previously supplied. Fremont Micro Devices, Incorporated (BVI) products are not authorized for use as critical components in life support devices or systems without express written approval of Fremont Micro Devices, Incorporated (BVI). The FMD logo is a registered trademark of Fremont Micro Devices, Incorporated (BVI). All other names are the property of their respective owners.