PSR Single-Stage AC-DC LED Driver with High PF

FEATURES

- Primary side control without secondary feedback circuit
- Single-stage active PFC for high power factor and low THD
- High current accuracy ±3%
- No Dimming (FT8260/2x)
- Three-level ON/Off Dimming (FT8261x)
- Ultra-low start up current
- Cycle-by-cycle current limit
- Over-voltage protection
- Short-circuit protection
- Over temperature protection
- Under voltage lockout protection

APPLICATIONS

- AC/DC LED driver applications
- Signal and decorative LED light
- E14/E27/PAR30/PAR38/GU10 LED lamp
- T8/T10 LED String

DESCRIPTION

The FT8260/1/2x is a single stage primary-side-control offline LED controller with high power factor, low THD and excellent current accuracy for isolated LED lighting applications.

The accurate current control from the primary side significantly simplifies the LED lighting system design by eliminating the secondary side feedback components and the opto-coupler.

The extremely low start-up current and quiescent current of FT8260/1/2x reduce the power consumption, resulting in excellent efficiency.

The multi-protection function of the FT8260/1/2x greatly enhances the system reliability and safety. The FT8260/1/2x features fruitful protection functions such as over-voltage protection, short-circuit protection, cycle-by-cycle current limit, over-temperature protection, VCC UVLO protection.

FMD Confidential

TYPICAL APPLICATION CIRCUIT

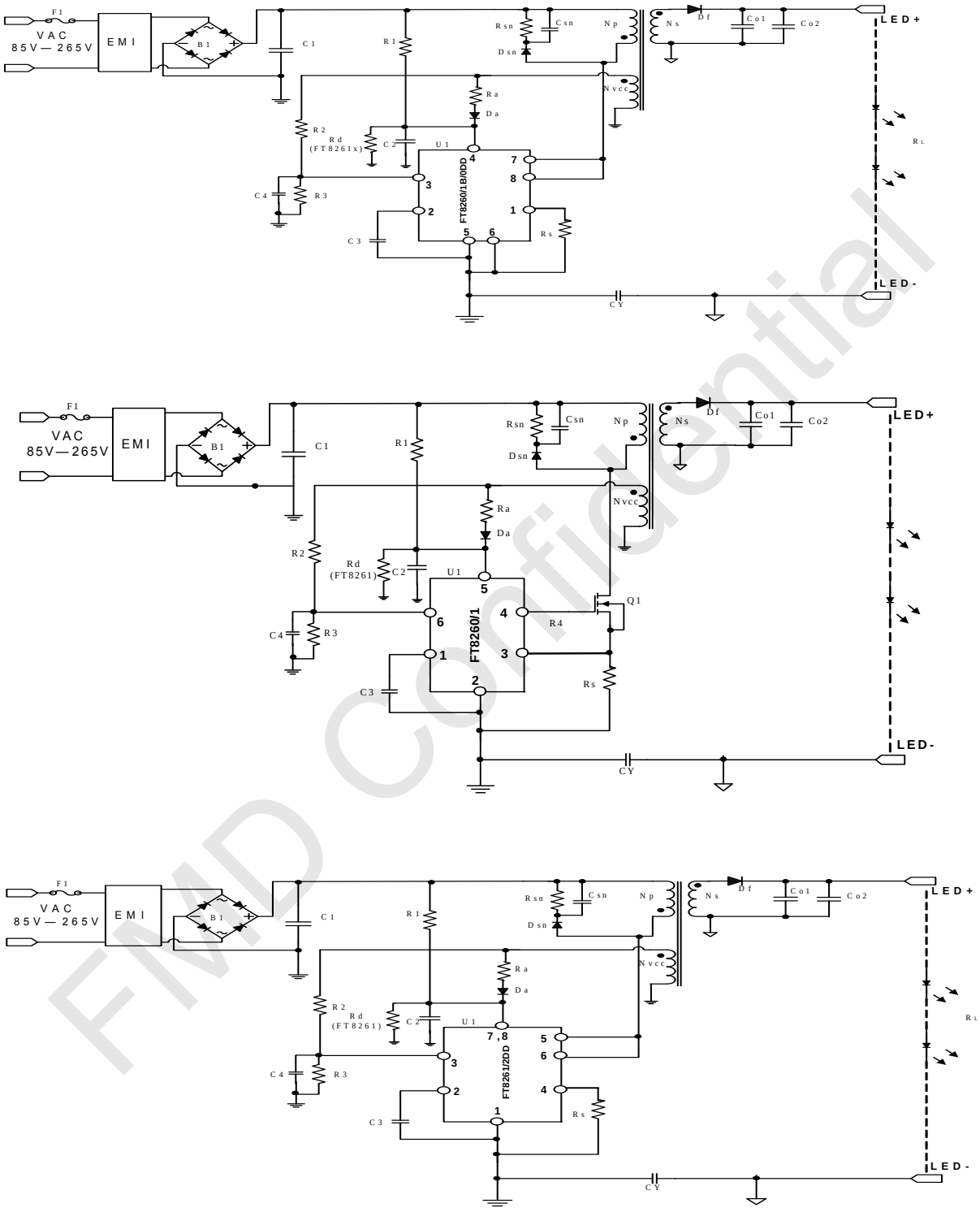

Figure 1: Typical Application Circuit

FMD Confidential

ABSOLUTE MAXIMUM RATINGS

VCC to GND……-0.3V to +25V
Analog Inputs and Outputs…….…….. -0.3V to 6V
D to GND……-0.3V to 650V
Operating Temperature Range……-40℃ to +125℃
Junction Temperature…….....-40℃ to +150℃
Storage Temperature Range ……-55℃ to +150℃
ESD Protection HBM…….….2000V
ESD Protection MM……... …….....….. 200V

**** Stresses exceed those listed under "Absolute Maximum Ratings" may cause permanent damage to the device. Functional operation of the device at conditions beyond those listed in the specification is not guaranteed. Prolonged exposure to extreme conditions may affect device reliability or functionality.***

FMD Confidential

PIN CONFIGURATION

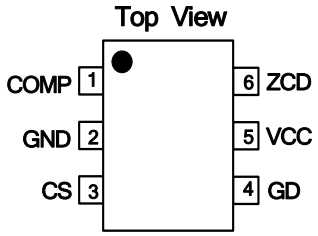

Figure 2.1: FT8260/1

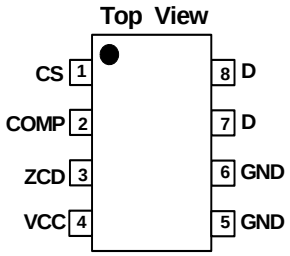

Figure 2.2: FT8260/1B/0DD

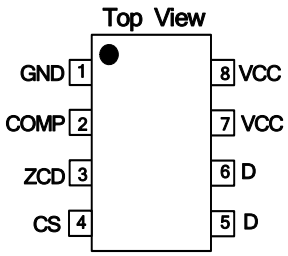

Figure 2.3: FT8261/2DD

TERMINAL DESCRIPTION

No.	PIN	FUNCTION
1	COMP	Internal EA's output. This pin connects a capacitor to ground to stabilize the current control loop
2	GND	Ground
3	CS	Current sense pin. This pin connects a current sense resistor to GND
4	GD	Gate drive output pin. Clamped to 13V to avoid excessive gate drive voltage
5	VCC	Power supply
6	ZCD	Zero current detection pin. A negative edge triggers the turn on signal of the external MOSFET. Connecting this pin through a resistor divider from the auxiliary winding to GND. Over-voltage condition is detected through ZCD. If ZCD voltage is higher than the over-voltage protection (OVP) threshold after a blanking time of 1us, the over-voltage condition is detected

Table1.1 FT8260/1 terminal description

No.	PIN	FUNCTION
1	CS	Current sense pin. This pin connects a current sense resistor to GND
2	COMP	Internal EA's output. This pin connects a capacitor to ground to stabilize the current control loop
3	ZCD	Zero current detection pin. A negative edge triggers the turn on signal of the internal MOSFET. Connecting this pin through a resistor divider from the auxiliary winding to GND. Over-voltage condition is detected through ZCD. If ZCD voltage is higher than the over-voltage protection (OVP) threshold after a blanking time of 1us, the over-voltage condition is detected
4	VCC	Power supply
5,6	GND	Ground
7,8	D	Internal power MOSFET drain

Table1.2 FT8260/1B/0DD terminal description

FMD confidential

No.	PIN	FUNCTION
1	GND	Ground
2	COMP	Internal EA's output. This pin connects a capacitor to ground to stabilize the current control loop
3	ZCD	Zero current detection pin. A negative edge triggers the turn on signal of the internal MOSFET. Connecting this pin through a resistor divider from the auxiliary winding to GND. Over-voltage condition is detected through ZCD. If ZCD voltage is higher than the over-voltage protection (OVP) threshold after a blanking time of 1us, the over-voltage condition is detected
4	CS	Current sense pin. This pin connects a current sense resistor to GND
5,6	D	Internal power MOSFET drain
7,8	VCC	Power supply

Table1.3 FT8261/2DD terminal description

ORDERING INFORMATION

FT8260/1 x - x x

Circuit Type
8260: No Dimming
8261: On/Off Dimming

HSF and Packaging
RT: RoHS and T&R
GT: Green and T&R

Package
Blank: SOT23-6

FT8260/1/2 x - x x x

Circuit Type
8260/2: No Dimming
8261: On/Off Dimming

Internal MOS Type
B or DD

HSF and Packaging
RB: RoHS and Tube
RT: RoHS and T&R
GB: Green and Tube
GT: Green and T&R

Package
Blank: SOP8
D: DIP8

FMD Confidential

Part No.	Dimming Method	Integrated MOS	Power	Package	Remark
FT8260	N/A	N/A	30W	SOT23-6	
FT8260B	N/A	650V, 2A	7W	SOP8	
FT8260DD	N/A	650V, 4A	18W	DIP8	N R N D
FT8262DD	N/A	650V, 4A	18W	DIP8	R N D
FT8261	3-level On-Off Dimming	N/A	30W	SOT23-6	
FT8261B	3-level On-Off Dimming	650V, 2A	7W	SOP8	
FT8261DD	3-level On-Off Dimming	650V, 4A	18W	DIP8	

Table 2

FT8260DD: **N**ot **R**ecommended for **N**ew **D**esign

FT8262DD: **R**ecommended for **N**ew **D**esign, pin to pin vs FT8261DD

MARKING RULE

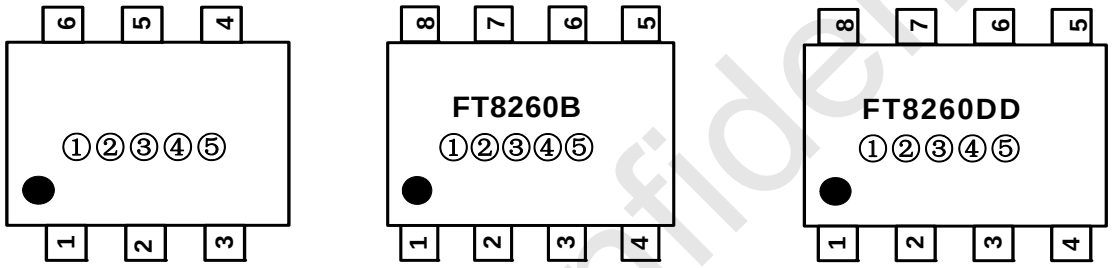

Figure 3.1 FT8260x marking rule

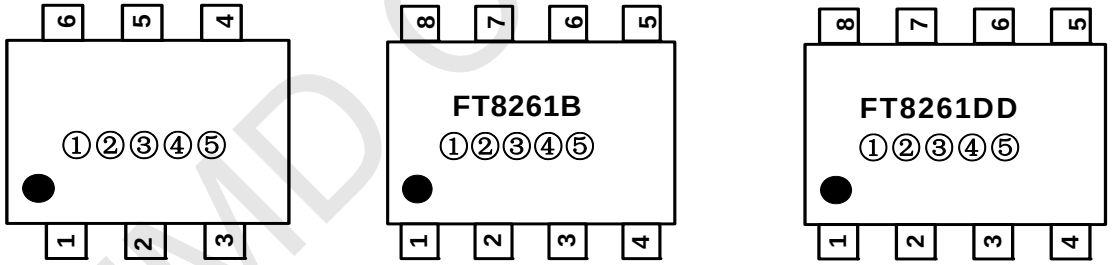

Figure 3.2 FT8261x marking rule

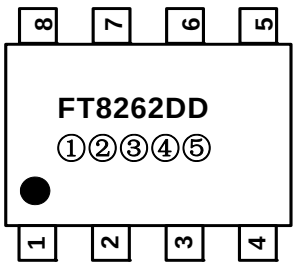

Figure 3.3 FT8262DD marking rule

①②③④⑤ for internal reference

FMD Confidential

BLOCK DIAGRAM

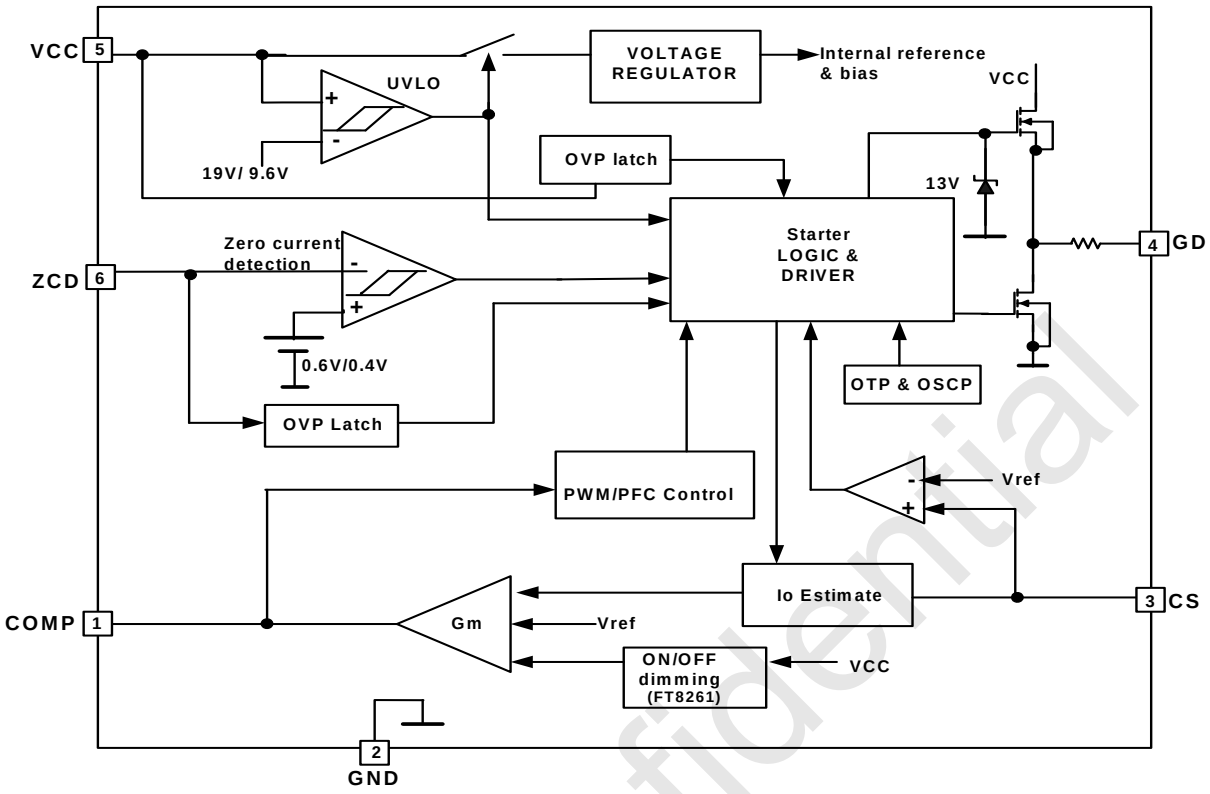

Figure 4.1 FT8260/1 Block Diagram

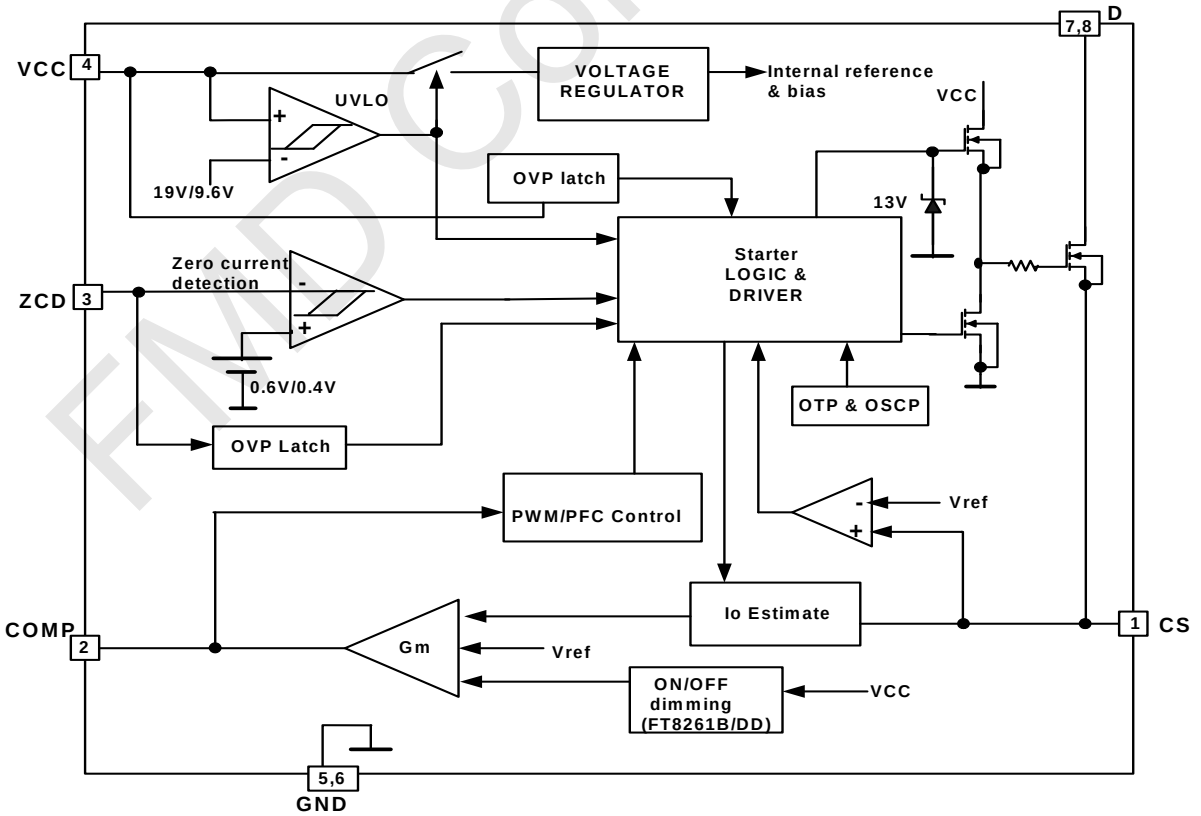

Figure 4.2 FT8260/1B/0DD Block Diagram

FMD Confidential

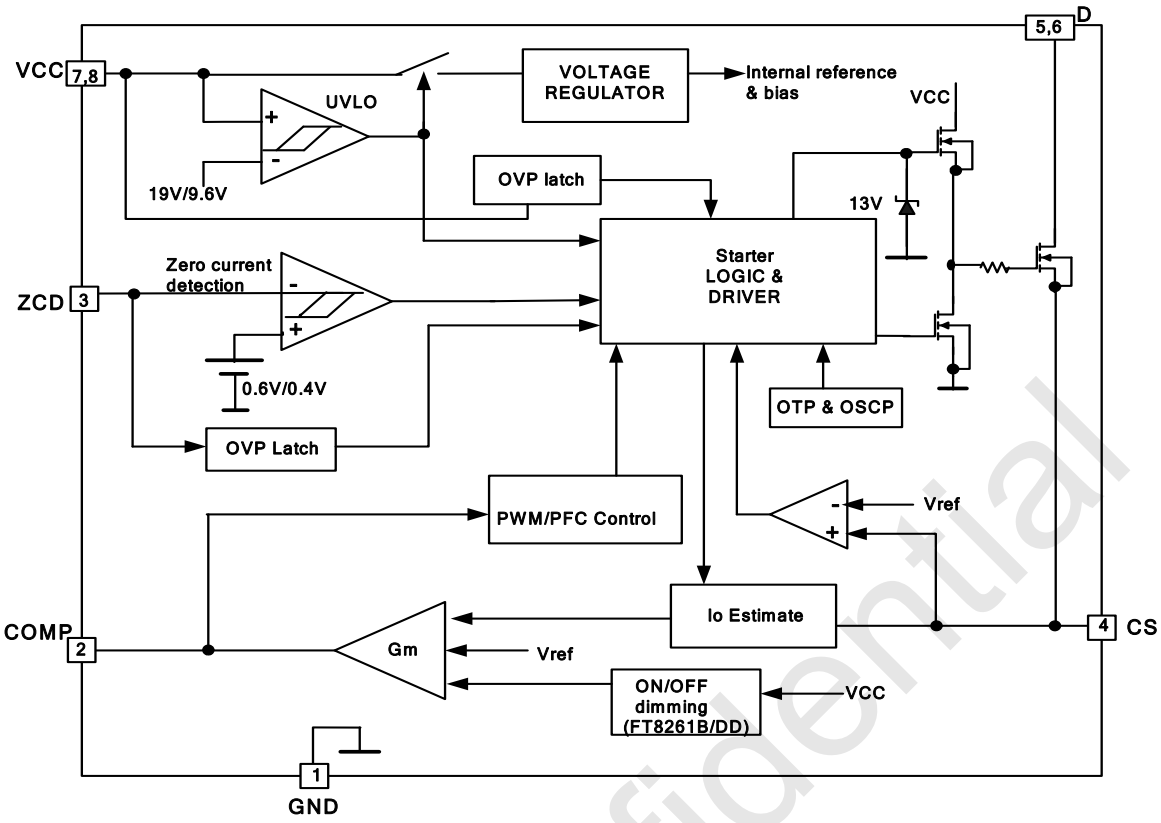

Figure 4.3 FT8261/2DD Block Diagram

FMD Confidential

ELECTRICAL CHARACTERISTICS

(Tj = 25°C, VCC = 16V, unless otherwise specified)

Symbol	Parameter	Test Condition	Min	Typ	Max	Unit
SUPPLY VOLTAGE & SUPPLY CURRENT						
VCC_{on}	Turn-on threshold			19		V
VCC_{off}	Turn-off threshold			9.6		V
VCC_{OVP}	VCC over voltage			24		V
Istart-up	Start-up current			23		uA
Iq	Quiescent Current	No switching		1.1		mA
Iclamp	VCC clamp current			3.5		mA
ERROR AMPLIFIER						
V_{FB}	Feedback Input Voltage			0.4		V
V_{COMP}	Lower Clamp Voltage			0.9		V
V_{COMP_OVP}	OSCP COMP voltage			2.6		V
CURRENT SENSE COMPARATOR						
$V_{CS\ max}$	Over current protection voltage			1.8		V
t_{LEB}	Leading Edge blanking time			380		ns
ZERO CURRENT DETECTOR						
V_{ZCD_T}	Zero Current Detect threshold	(1)		0.4		V
V_{ZCD_Hy}	Zero Current Detect Hystestic	(1)		0.2		V
V_{ZCD_OVP}	ZCD over voltage threshold	1us delay after turn-off		3.2		V
LOGIC						
t_{START}	Start Timer period			140		us
T_{off_min}	Minimum off time			6.4		us
T_{on_max}	Maximum on time			24		us
GATE DRIVER (FT8260/1)						
I_{GD}-source	Max source current			65		mA
I_{GD}-sink	Max sink current			-160		mA
Power MOSFET (FT8260/1B)						
R_{DSON}	Static drain-source on resistance	V_{GS}=10V,I_{DS}=0.5A		4.5		Ω
BV_{DSS}	Drain-source breakdown voltage	V_{GS}=0V,I_{DS}=250uA	650			V
I_{DSS}	Drain-source leakage current	V_{GS}=0V,V_{DS}=650V			10	uA
I_{DMAX}	Maximum drain current	Vd=3V		0.65		A

FMD Confidential

Power MOSFET (FT8260/1/2DD)						
R_{DSON}	Static drain-source on resistance	V_{GS}=10V,I_{DS}=0.5A		2.3		Ω
BV_{DSS}	Drain-source breakdown voltage	V_{GS}=0V,I_{DS}=250uA	650			V
I_{DSS}	Drain-source leakage current	V_{GS}=0V,V_{DS}=650V			10	uA
I_{DMAX}	Maximum drain current	Vd=3V		1.3		A
ON-OFF DIMMING (FT8261x)						
K_{DIM}	On-off Dimming level 1	FT8261x		100		%
	On-off Dimming level 2	FT8261x		50		%
	On-off Dimming level 3	FT8261x		25		%
T_{ONOFF}	Time interval of On-off Dimming	FT8261x, R1=280k, C2=10uF, Rd=750k			1.5	S
T_{RESET}	Time interval of Shutdown	FT8261x, R1=280k, C2=10uF, Rd=750k	2.5			S
OVER TEMPERATURE PROTECTION						
OTP	OTP shut down			150		℃
OTP-hys	OTP release			130		℃

Table 3

(1) Parameters guaranteed by design, functionality tested in production.

(2) FT8260DD is not recommended for new design.

FMD Confidential

FUNCTIONAL DESCRIPTION

Real Current Control

FT8260/1/2x accurately regulates LED current by sensing the primary side information. The LED current can be easily set as following (refer to figure 1):

$$I_{OUT} = \frac{1}{2} * \frac{V_{FB}}{R_S} * \frac{N_P}{N_S}$$

Where N_P is the primary winding and N_S is the secondary winding; V_{FB} (=400mV) is the internal voltage reference and R_S is the external current sensing resistor.

Power Factor Correction

High power factor is achieved by constant on operation. By connecting a 1uF~2.2uF capacitor between the COMP pin and ground, the COMP pin voltage is relatively constant, constant on time is achieved by simple circuit structure.

Start Up

During start-up process, VCC is charged through a start-up resistor. As VCC reaches VCCon voltage, COMP pin is pre-charged by an internal circuit. After COMP reaches 0.9V and the internal control loop is settled, a starter signal is sent to GD Pin to power up the converter. The power is then supplied by the auxiliary winding once the voltage of the winding is high enough. The PWM signal is shut down if VCC goes below VCCoff threshold voltage, COMP Pin is then discharged to ground.

Line Compensation

An offset current proportional to instantaneous mains voltage streams out CS pin. A compensation resistor inversely proportional to the offset current is added between ZCD Pin and transformer auxiliary winding to achieve excellent line compensation; the compensation resistor can be adjusted externally.

Zero current switching

The IC is switched on when the transformer is demagnetized after MOSFET's minimum off time about 6.4us typically. Internal circuitry connected to the ZCD pin detects the end of the secondary stroke. After MOSFET's minimum off time, if no demagnetization signal is detected on the ZCD pin, the controller generates a startup signal typically 140us after the last GD signal.

Leading Edge Blanking (LEB)

A turn on spike on CS pin will inevitably appear when the power MOSFET is switched on. At the beginning of each switching pulse, the current-limit comparator is disabled for around 380nsec to avoid premature termination. The gate driver output cannot be switched off during the blanking period.

Output Over Voltage Protection (OUTOVP)

Refer to figure 1, the voltage of ZCD pin is set by R2, R3 and auxiliary winding due to the coupling polarity between the auxiliary winding and the secondary winding of the transformer. Once the ZCD voltage exceeds 3.2V after a blanking time about 1us to allow the leakage inductance ringing fully damped, ZCD OVP is triggered, the IC stops switching, It can be reset by re-starting the voltage on pin VCC.

FMD Confidential

The OVP voltage can be adjusted by the equation:

$$V_{OUT\_OVP} = 3.2 * (1 + \frac{R2}{R3}) * \frac{N_S}{N_{VCC}} + V_{Df}$$

Where N_S is secondary winding, N_{VCC} is the auxiliary winding, V_{Df} is the forward bias voltage of the secondary diode.

VCC Over Voltage Protection (VCCOVP)

Once the VCC voltage exceeds 24V and last for about 6us, VCC OVP is triggered, the IC stops switching, VCC voltage will be pulled down. It can be reset by re-starting the voltage on pin VCC. It is recommended to set the VCC normal operating voltage between 11V and 22V.

Output Short Circuit Protection

When output short circuit detected, the system works at low frequency (Fop=7KHz), so the power consumption is low, meanwhile COMP pin voltage will rise. When COMP voltage exceeds 2.6V, the power MOSFET will be shut down immediately. It can be reset by re-starting the voltage on pin VCC.

Over Current Protection

FT8260/1/2x immediately turns off the power MOSFET once the voltage at CS pin exceeds 1.8V. This cycle by cycle current limitation scheme prevents the relevant components, such as power MOSFET, transformer, etc. from damage.

Over Temperature Protection

The thermal protection circuitry in the FT8260/1/2x senses the die temperature after start up. When the temperature on die rises to 150℃, the power MOSFET will be shut down immediately and will remain switched off until the temperature on die falls to 130℃.

ON-OFF-Dimming (For FT8261x only)

Compare to Triac dimming, ON-OFF dimming is a simple and green solution to LED lighting applications. FT8261x enables three-level ON/OFF dimming function with proper choice of VCC capacitor and discharge resistor Rd. By simply counting the number of wall switch toggling, the output power cycles through the 100%, 50% and 25% settings, in that order. There are two parameters governing the ON/OFF action. If mains switch is turned off and stays off for longer than T_{RESET}, the turning off is regarded as true turning-off action, hence any subsequent turning on will output rated 100% power. If the wall switch is turned on and off or toggles in less than T_{ONOFF} apart, the output will go through 100%, 50%, 25% rated power levels and repeat the process. T_{RESET} and T_{ONOFF} can be set by the VCC capacitor, C2 and the resistor between VCC and GND, Rd. Typical settings are given in Table 3.

FMD Confidential

SOT23–6 PACKAGE OUTLINE DIMENSIONS

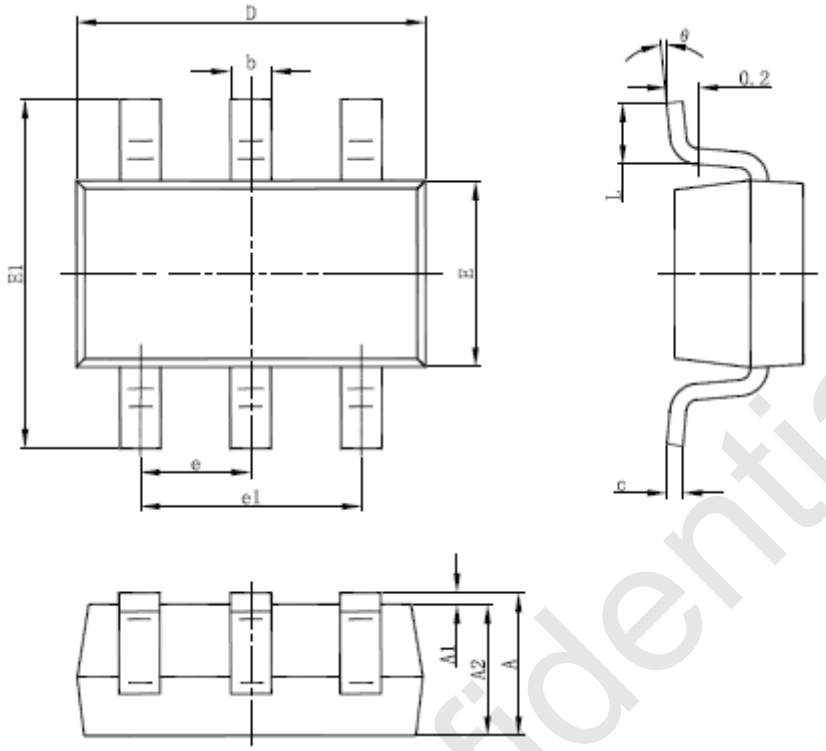

Symbol	Dimensions In Millimeters		Dimensions In Inches	
	Min	Max	Min	Max
A	1.050	1.250	0.041	0.049
A1	0.000	0.100	0.000	0.004
A2	1.050	1.150	0.041	0.045
b	0.300	0.500	0.012	0.020
c	0.100	0.200	0.004	0.008
D	2.820	3.020	0.111	0.119
E	1.500	1.700	0.059	0.067
E1	2.650	2.950	0.104	0.116
e	0.950 (BSC)		0.037（BSC）	
e1	1.800	2.000		0.079
L	0.300	0.600		0.024
θ	0°	8°	0°	8°

FMD Confidential

SOP8 PACKAGE OUTLINE DIMENSIONS

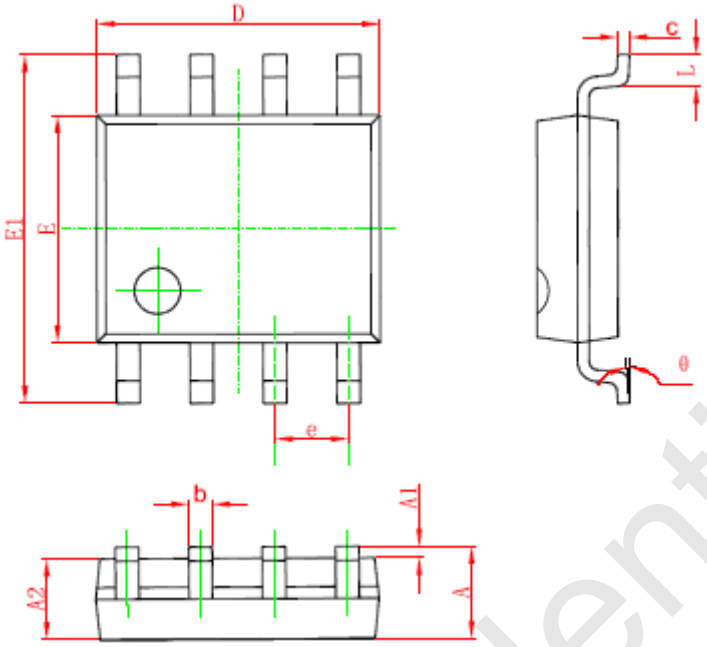

Symbol	Dimensions in Millimeters		Dimensions in Inches	
	Mix	Max	Min	Max
A	1.350	1.750	0.053	0.069
A1	0.100	0.250	0.004	0.010
A2	1.350	1.550	0.053	0.061
b	0.330	0.510	0.013	0.020
c	0.170	0.250	0.006	0.010
D	4.700	5.100	0.185	0.200
E	3.800	4.000	0.150	0.157
E1	5.800	6.200	0.228	0.244
e	1.270 (BSC)		0.050（BSC）	
L	0.400	1.270	0.016	0.050
θ	0°	8°	0°	8°

FMD Confidential

DIP8 PACKAGE OUTLINE DIMENSIONS

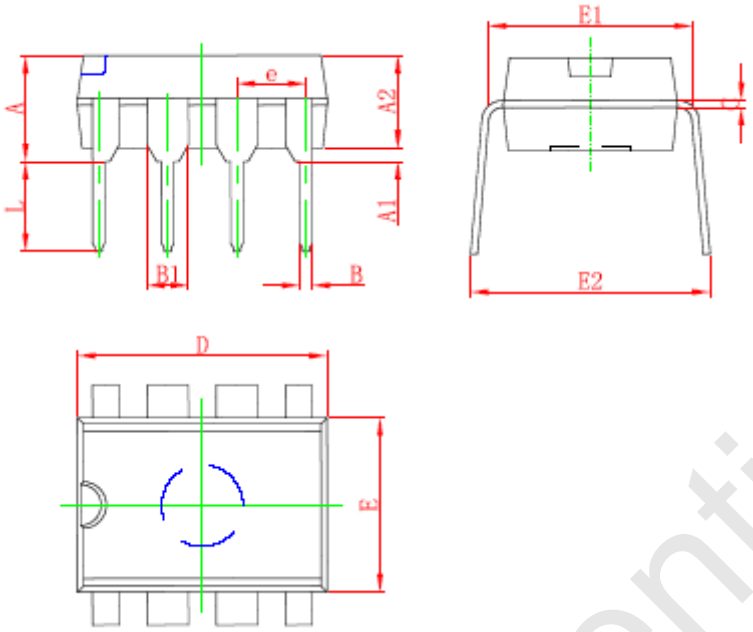

Symbol	Dimensions in Millimeters		Dimensions in Inches	
	Min	Max	Min	Max
A	3.710	4.310	0.146	0.170
A1	0.510		0.020	
A2	3.200	3.600	0.126	0.142
B	0.380	0.570	0.015	0.022
B1	1.524（BSC）		0.060（BSC）	
C	0.204	0.360	0.008	0.014
D	9.000	9.400	0.354	0.370
E	6.200	6.600	0.244	0.260
E1	7.320	7.920	0.288	0.312
e	2.540 (BSC)		0.100（BSC）	
L	3.000	3.600	0.118	0.142
E2	8.400	9.000	0.331	0.354

FMD Confidential

Fremont Micro Devices (SZ) Limited

#5-8, 10/F, Changhong Building, Ke-Ji Nan 12 Road, Nanshan District, Shenzhen
Tel: (86 755) 86117811
Fax: (86 755) 86117810

Fremont Micro Devices (Hong Kong) Limited

#16, 16/F, Blk B, Veristrong Industrial Centre, 34-36 Au Pui Wan Street, Fotan, Shatin, Hong Kong
Tel: (852) 27811186
Fax: (852) 27811144

Fremont Micro Devices (USA), Inc.

42982 Osgood Road Fremont, CA 94539
Tel: (1-510) 668-1321
Fax: (1-510) 226-9918

Web Site: http://www.fremontmicro.com/

FMD Confidential

* Information furnished is believed to be accurate and reliable. However, Fremont Micro Devices, Incorporated (BVI) assumes no responsibility for the consequences of use of such information or for any infringement of patents of other rights of third parties which may result from its use. No license is granted by implication or otherwise under any patent rights of Fremont Micro Devices, Incorporated (BVI). Specifications mentioned in this publication are subject to change without notice. This publication supersedes and replaces all information previously supplied. Fremont Micro Devices, Incorporated (BVI) products are not authorized for use as critical components in life support devices or systems without express written approval of Fremont Micro Devices, Incorporated (BVI). The FMD logo is a registered trademark of Fremont Micro Devices, Incorporated (BVI). All other names are the property of their respective owners.