Future Technology Devices International Ltd.

FT81x

(Advanced Embedded Video Engine)

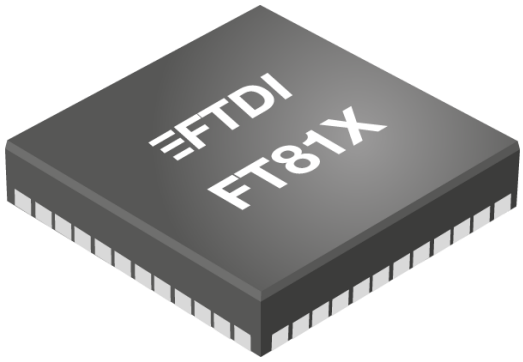

The FT81x is a series of easy to use graphic controllers targeted at embedded applications to generate high-quality Human Machine Interfaces (HMIs). It has the following features:

- Advanced Embedded Video Engine(EVE) with high resolution graphics and video playback
- FT81x functionality includes graphic control, audio control, and touch control interface.
- Pinout backward compatible with FT800 (FT810) and FT801 (FT811).
- Support multiple widgets for simplified design implementation
- Built-in graphics operations allow users with little expertise to create high-quality displays
- Support 4-wire resistive touch screen (FT810/FT812)
- Support capacitive touch screen with up to 5 touches detection (FT811/FT813)
- Hardware engine can recognize touch tags and track touch movement. Provides notification for up to 255 touch tags.
- Enhanced sketch processing
- Programmable interrupt controller provides interrupts to host MCU
- Built-in 12MHz crystal oscillator with PLL providing programmable system clock up to 60MHz
- Clock switch command for internal or external clock source. External 12MHz crystal or clock input can be used for higher accuracy.
- Video RGB parallel output; configurable to support PCLK up to 60MHz and R/G/B output of 1 to 8 bits
- Programmable timing to adjust HSYNC and VSYNC timing, enabling interface to numerous displays
- Support for LCD display with resolution up to SVGA (800x600) and formats with data enable (DE) mode or VSYNC/HSYNC mode
- Support landscape and portrait orientations
- Display enable control output to LCD panel
- Integrated 1MByte graphics RAM, no frame buffer RAM required
- Support playback of motion-JPEG encoded AVI videos
- Mono audio channel output with PWM output
- Built-in sound synthesizer
- Audio wave playback for mono 8-bit linear PCM, 4-bit ADPCM and μ-Law coding format at sampling frequencies from 8kHz to 48kHz. Built-in digital filter reduces the system design complexity of external filtering
- PWM output for display backlight dimming control
- Advanced object oriented architecture enables low cost MPU/MCU as system host using SPI interfaces
- Support SPI data lines in single, dual or quad mode; SPI clock up to 30MHz
- Power mode control allows the chip to be put in power down, sleep and standby states
- Supports I/O voltage from 1.8V to 3.3V
- Internal voltage regulator supplies 1.2V to the digital core
- Build-in Power-on-reset circuit
- -40°C to 85°C extended operating temperature range
- Available in a compact Pb-free, VQFN-48 and VQFN-56 package, RoHS compliant

Copyright © 2015 Future Technology Devices International Limited

Disclaimer:

Neither the whole nor any part of the information contained in, or the product described in this manual, may be adapted or reproduced in any material or electronic form without the prior written consent of the copyright holder. This product and its documentation are supplied on an as-is basis and no warranty as to their suitability for any particular purpose is either made or implied. Future Technology Devices International Ltd will not accept any claim for damages howsoever arising as a result of use or failure of this product. Your statutory rights are not affected. This product or any variant of it is not intended for use in any medical appliance, device or system in which the failure of the product might reasonably be expected to result in personal injury. This document provides preliminary information that may be subject to change without notice. No freedom to use patents or other intellectual property rights is implied by the publication of this document.

Future Technology Devices International Ltd
Unit 1, 2 Seaward Place
Centurion Business Park
Glasgow G41 1HH
United Kingdom

Scotland Registered Company Number: SC136640

1 Typical Applications

- Point of Sales Machines
- Multi-function Printers
- Instrumentation
- Home Security Systems
- Graphic touch pad – remote, dial pad
- Tele / Video Conference Systems
- Phones and Switchboards
- Medical Appliances
- Blood Pressure displays
- Heart monitors
- Glucose level displays
- Breathalyzers
- Gas chromatographs
- Power meter
- Home appliance devices
- Set-top box
- Thermostats
- Sprinkler system displays
- Medical Appliances
- GPS / Satnav
- Vending Machine Control Panels
- Elevator Controls
- ……and many more

1.1 Part Numbers

Part Number	Description	Package
FT810Q-x	EVE with 18 bit RGB, resistive touch	48 Pin VQFN, body 7 x 7 mm, pitch 0.5mm
FT811Q-x	EVE with 18 bit RGB, capacitive touch	48 Pin VQFN, body 7 x 7 mm, pitch 0.5mm
FT812Q-x	EVE with 24 bit RGB, resistive touch	56 Pin VQFN, body 8 x 8 mm, pitch 0.5mm
FT813Q-x	EVE with 24 bit RGB, capacitive touch	56 Pin VQFN, body 8 x 8 mm, pitch 0.5mm

Table 1- FT81x Embedded Video Engine Part Numbers

Note: Packaging codes for x is:

-R: Taped and Reel (3000pcs per reel)

-T: Tray packing (260 pcs per tray for VQFN-48, 348 pcs per tray for VQFN-56)

For example: FT810Q-R is 3000 VQFN pieces in taped and reel packaging

Copyright © 2015 Future Technology Devices International Limited

2 Block Diagram

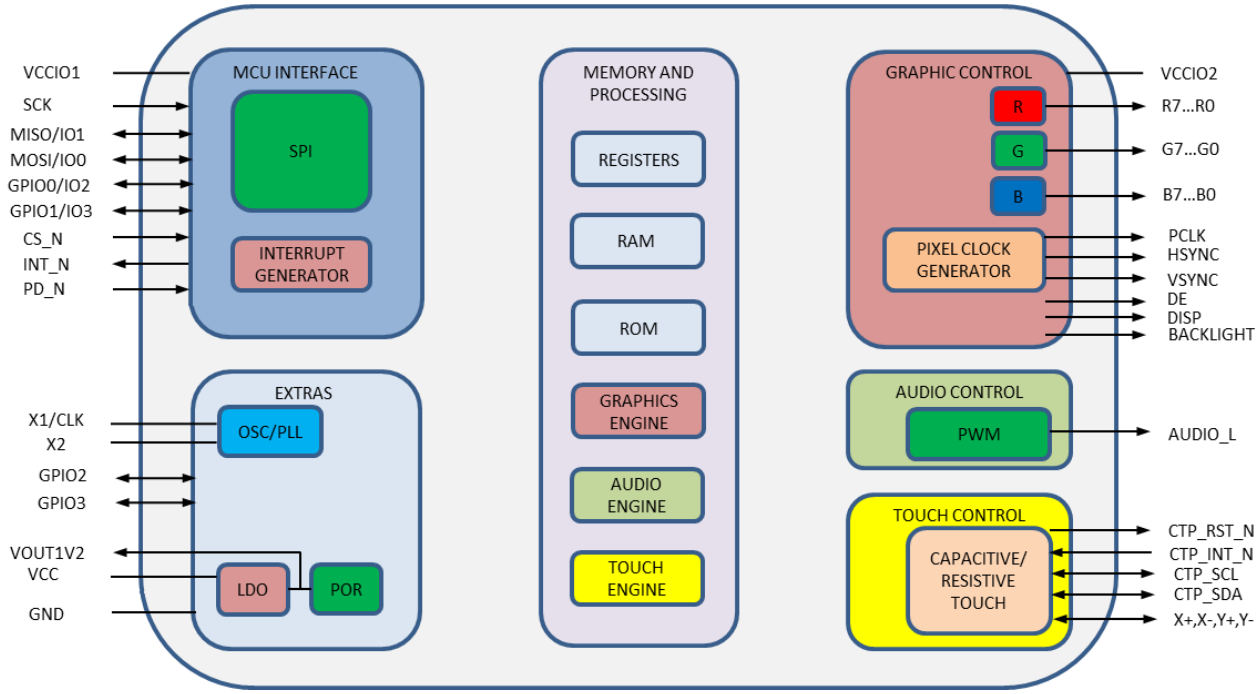

Figure 2-1 FT81x Block Diagram

For a description of each function please refer to Section 4.

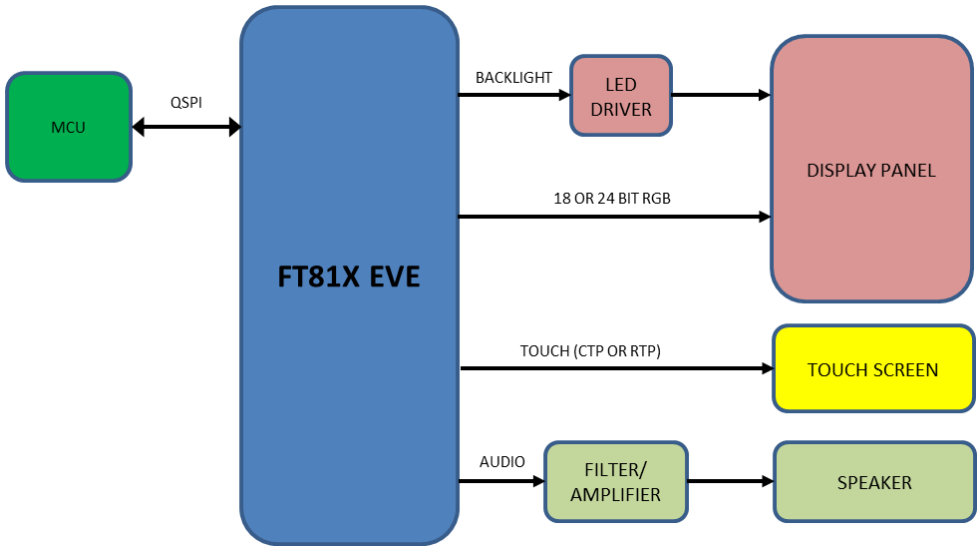

Figure 2-2 FT81x System Design Diagram

FT81x with EVE (Embedded Video Engine) technology simplifies the system architecture for advanced human machine interfaces (HMIs) by providing support for display, audio, and touch as well as an object oriented architecture approach that extends from display creation to the rendering of the graphics.

Copyright © 2015 Future Technology Devices International Limited

Contents

1 Typical Applications 3
1.1 Part Numbers 3
2 Block Diagram 4
3 Device Pin Out and Signal Description 7
3.1 FT810 VQFN-48 Package Pin Out 7
3.2 FT811 VQFN-48 Package Pin Out 7
3.3 FT812 VQFN-56 Package Pin Out 8
3.4 FT813 VQFN-56 Package Pin Out 8
3.5 Pin Description 9
4 Function Description 13
4.1 Quad SPI Host Interface 13
4.1.1 QSPI Interface 13
4.1.2 Serial Data Protocol 15
4.1.3 Host Memory Read 15
4.1.4 Host Memory Write 16
4.1.5 Host Command 16
4.1.6 Interrupts 20
4.2 System Clock 20
4.2.1 Clock Source 20
4.2.2 Phase Locked Loop 21
4.2.3 Clock Enable 21
4.2.4 Clock Frequency 22
4.3 Graphics Engine 22
4.3.1 Introduction 22
4.3.2 ROM and RAM Fonts 22
4.4 Parallel RGB Interface 26
4.5 Miscellaneous Control 28
4.5.1 Backlight Control Pin 29
4.5.2 DISP Control Pin 29
4.5.3 General Purpose IO pins 29
4.5.4 Pins Drive Current Control 29
4.6 Audio Engine 30
4.6.1 Sound Synthesizer 30
4.6.2 Audio Playback 32
4.7 Touch-Screen Engine 32
4.7.1 Resistive Touch Control 32
4.7.2 Capacitive Touch Control 33
4.7.3 Compatibility mode 34

Copyright © 2015 Future Technology Devices International Limited

4.7.4 Extended mode 34
4.7.5 Short-circuit protection 35
4.7.6 Capacitive touch configuration 35
4.7.7 Touch detection in none-ACTIVE state 35
4.8 Power Management 35
4.8.1 Power supply 35
4.8.2 Internal Regulator and POR 36
4.8.3 Power Modes 37
4.8.4 Reset and boot-up sequence 38
4.8.5 Pin Status at Different Power States 38
5 Memory Map 40
5.1 Registers 40
5.2 Chip ID 45
6 Devices Characteristics and Ratings 46
6.1 Absolute Maximum Ratings 46
6.2 ESD and Latch-up Specifications 46
6.3 DC Characteristics 46
6.4 AC Characteristics 49
6.4.1 System clock and reset 49
6.4.2 SPI interface timing 49
6.4.3 RGB Interface Timing 50
7 Application Examples 52
8 Package Parameters 54
8.1 VQFN-48 Package Dimensions 54
8.2 VQFN-56 Package Dimensions 54
8.3 Solder Reflow Profile 55
9 Contact Information 56
Appendix A – References 57
Appendix B - List of Figures and Tables 58
Appendix C - Revision History 60

Copyright © 2015 Future Technology Devices International Limited

3 Device Pin Out and Signal Description

3.1 FT810 VQFN-48 Package Pin Out

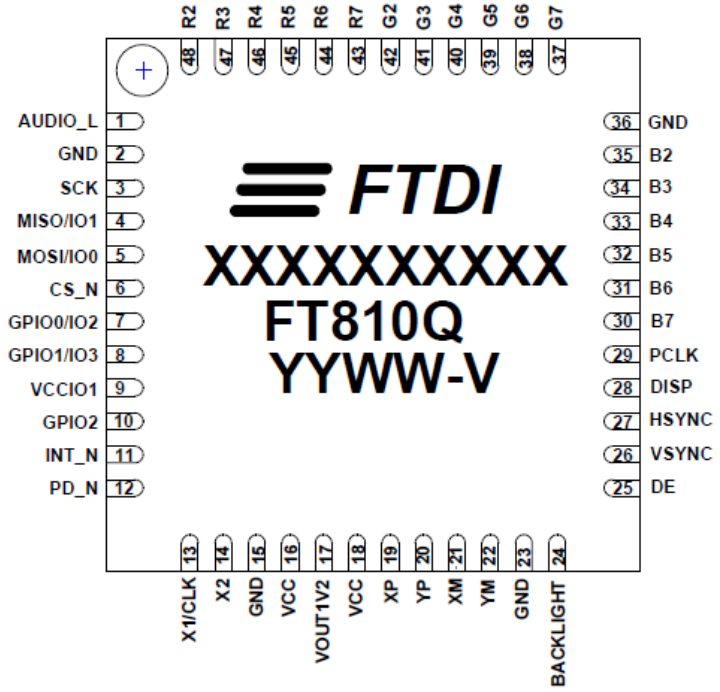

Figure 3-1 Pin Configuration FT810 VQFN-48 (top view)

3.2 FT811 VQFN-48 Package Pin Out

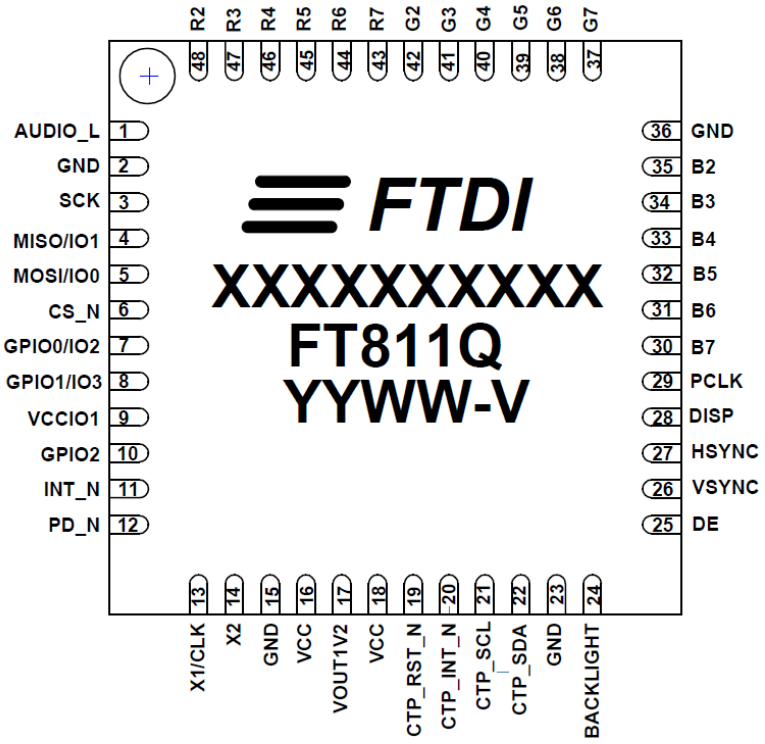

Figure 3-1 Pin Configuration FT811 VQFN-48 (top view)

Copyright © 2015 Future Technology Devices International Limited

3.3 FT812 VQFN-56 Package Pin Out

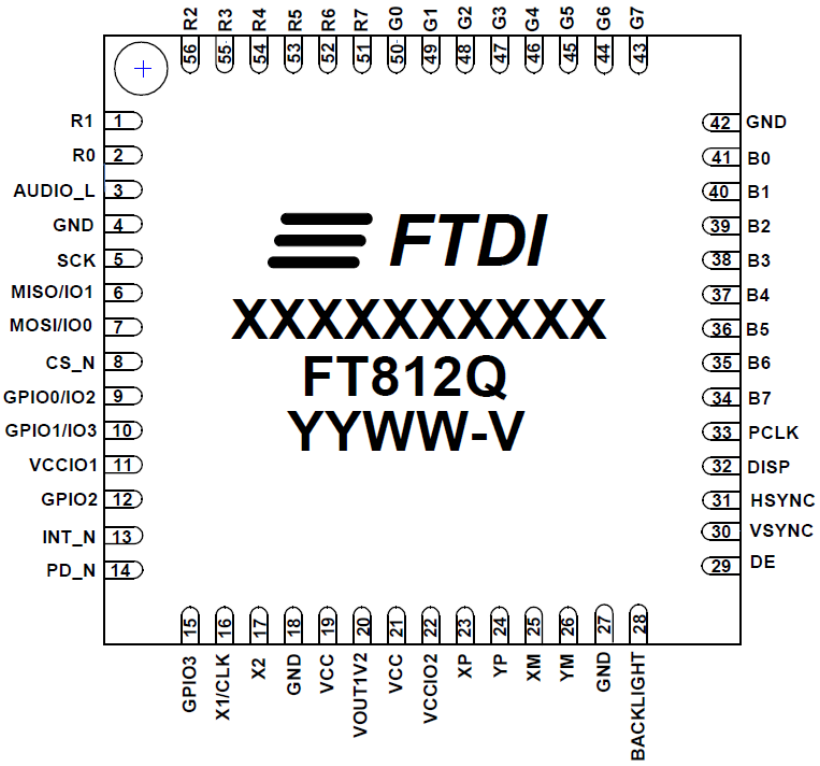

Figure 3-1 Pin Configuration FT812 VQFN-56 (top view)

3.4 FT813 VQFN-56 Package Pin Out

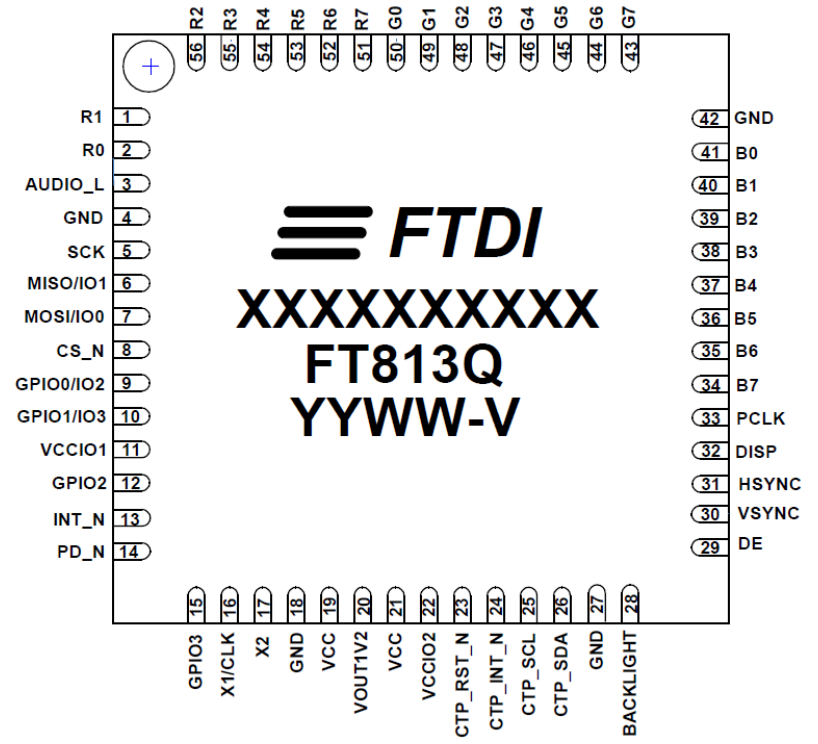

Figure 3-1 Pin Configuration FT813 VQFN-56 (top view)

Copyright © 2015 Future Technology Devices International Limited

3.5 Pin Description

Table 3-1 FT81x pin description

Pin Number				Pin Name	Type	Description
FT810	FT811	FT812	FT813			
-	-	1	1	R1	O	Bit 1 of Red RGB signals Powered from pin VCCIO2
-	-	2	2	R0	O	Bit 0 of Red RGB signals Powered from pin VCCIO2
1	1	3	3	AUDIO_L	O	Audio PWM out Powered from pin VCC
2	2	4	4	GND	P	Ground
3	3	5	5	SCK	I	SPI clock input Powered from pin VCCIO1
4	4	6	6	MISO/IO1	I/O	SPI Single mode: SPI MISO output SPI Dual/Quad mode: SPI data line 1 Powered from pin VCCIO1
5	5	7	7	MOSI/IO0	I/O	SPI Single mode: SPI MOSI input SPI Dual/Quad mode: SPI data line 0 Powered from pin VCCIO1
6	6	8	8	CS_N	I	SPI slave select input Powered from pin VCCIO1
7	7	9	9	GPIO0/IO2	I/O	SPI Single/Dual mode: General purpose IO 0 SPI Quad mode: SPI data line 2 Powered from pin VCCIO1
8	8	10	10	GPIO1/IO3	I/O	SPI Single/Dual mode: General purpose IO 1 SPI Quad mode: SPI data line 3 Powered from pin VCCIO1
9	9	11	11	VCCIO1	P	I/O power supply for host interface pins. Support 1.8V, 2.5V or 3.3V.
10	10	12	12	GPIO2	I/O	General purpose IO 2 Powered from pin VCCIO1
11	11	13	13	INT_N	OD/ O	Interrupt to host, open drain output(default) or push-pull output, active low
12	12	14	14	PD_N	I	Chip power down mode control input, active low. Connect to MCU GPIO for power management or hardware reset function, or pulled up to VCCIO1 through 47kΩ resistor and 100nF to ground. Powered from pin VCCIO1
-	-	15	15	GPIO3	I/O	General purpose IO 3 Powered from pin VCCIO1

Copyright © 2015 Future Technology Devices International Limited

Pin Number				Pin Name	Type	Description
FT810	FT811	FT812	FT813			
13	13	16	16	X1/CLK	I	Crystal oscillator or clock input; Connect to GND if not used. 3.3V peak input allowed. Powered from pin VCC.
14	14	17	17	X2	O	Crystal oscillator output; leave open if not used. Powered from pin VCC.
15	15	18	18	GND	P	Ground
16	16	19	19	VCC	P	3.3V power supply input.
17	17	20	20	VOUT1V2	O	1.2V regulator output pin. Connect a 4.7uF decoupling capacitor to GND.
18	18	21	21	VCC	P	3.3V power supply input.
		22	22	VCCIO2	P	I/O power supply for RGB and touch pins. For QFN-48 package, VCCIO2 is bonded together with VCC pin; For QFN-56 package, VCCIO2 is separate from VCC pin. VCCIO2 supports 1.8V, 2.5V or 3.3V. VCCIO2 can be connected to different voltage with VCCIO1.
19		23		XP	AI/O	Connect to X right electrode of 4-wire resistive touch-screen panel. Powered from pin VCCIO2.
20		24		YP	AI/O	Connect to Y top electrode of 4-wire resistive touch-screen panel. Powered from pin VCCIO2.
21		25		XM	AI/O	Connect to X left electrode of 4-wire resistive touch-screen panel. Powered from pin VCCIO2.
22		26		YM	AI/O	Connect to Y bottom electrode of 4-wire resistive touch-screen panel. Powered from pin VCCIO2.
-	19	-	23	CTP_RST_N	O	Connect to reset pin of the CTPM. Powered from pin VCCIO2.
-	20	-	24	CTP_INT_N	I	Connect to interrupt pin of the CTPM. Powered from pin VCCIO2.
-	21	-	25	CTP_SCL	I/OD	Connect to I2C SCL pin of the CTPM. Powered from pin VCCIO2.
-	22	-	26	CTP_SDA	I/OD	Connect to I2C SDA pin of the CTPM. Powered from pin VCCIO2.
23	23	27	27	GND	P	Ground
24	24	28	28	BACKLIGHT	O	LED Backlight brightness PWM control signal.

Copyright © 2015 Future Technology Devices International Limited

Pin Number				Pin Name	Type	Description
FT810	FT811	FT812	FT813			
						Powered from pin VCCIO2.
25	25	29	29	DE	O	LCD Data Enable. Powered from pin VCCIO2.
26	26	30	30	VSYNC	O	LCD Vertical Sync. Powered from pin VCCIO2.
27	27	31	31	HSYNC	O	LCD Horizontal Sync. Powered from pin VCCIO2.
28	28	32	32	DISP	O	LCD Display Enable. Powered from pin VCCIO2.
29	29	33	33	PCLK	O	LCD Pixel Clock. Powered from pin VCCIO2.
30	30	34	34	B7	O	Bit 7 of Blue RGB signals. Powered from pin VCCIO2.
31	31	35	35	B6	O	Bit 6 of Blue RGB signals. Powered from pin VCCIO2.
32	32	36	36	B5	O	Bit 5 of Blue RGB signals. Powered from pin VCCIO2.
33	33	37	37	B4	O	Bit 4 of Blue RGB signals. Powered from pin VCCIO2.
34	34	38	38	B3	O	Bit 3 of Blue RGB signals. Powered from pin VCCIO2.
35	35	39	39	B2	O	Bit 2 of Blue RGB signals. Powered from pin VCCIO2.
-	-	40	40	B1	O	Bit 1 of Blue RGB signals. Powered from pin VCCIO2.
-	-	41	41	B0	O	Bit 0 of Blue RGB signals. Powered from pin VCCIO2.
36	36	42	42	GND	P	Ground
37	37	43	43	G7	O	Bit 7 of Green RGB signals. Powered from pin VCCIO2.
38	38	44	44	G6	O	Bit 6 of Green RGB signals. Powered from pin VCCIO2.
39	39	45	45	G5	O	Bit 5 of Green RGB signals. Powered from pin VCCIO2.
40	40	46	46	G4	O	Bit 4 of Green RGB signals. Powered from pin VCCIO2.
41	41	47	47	G3	O	Bit 3 of Green RGB signals. Powered from pin VCCIO2.

Copyright © 2015 Future Technology Devices International Limited

Pin Number				Pin Name	Type	Description
FT810	FT811	FT812	FT813			
42	42	48	48	G2	O	Bit 2 of Green RGB signals. Powered from pin VCCIO2.
-	-	49	49	G1	O	Bit 1 of Green RGB signals. Powered from pin VCCIO2.
-	-	50	50	G0	O	Bit 0 of Green RGB signals. Powered from pin VCCIO2.
43	43	51	51	R7	O	Bit 7 of Red RGB signals. Powered from pin VCCIO2.
44	44	52	52	R6	O	Bit 6 of Red RGB signals. Powered from pin VCCIO2.
45	45	53	53	R5	O	Bit 5 of Red RGB signals. Powered from pin VCCIO2.
46	46	54	54	R4	O	Bit 4 of Red RGB signals. Powered from pin VCCIO2.
47	47	55	55	R3	O	Bit 3 of Red RGB signals. Powered from pin VCCIO2.
48	48	56	56	R2	O	Bit 2 of Red RGB signals. Powered from pin VCCIO2.
EP	EP	EP	EP	GND	P	Ground. Exposed thermal pad.

Note:

P : Power or ground

I : Input

O : Output

OD : Open drain output

I/O : Bi-direction Input and Output

AI/O: Analog Input and Output

Copyright © 2015 Future Technology Devices International Limited

4 Function Description

The FT81x is a single chip, embedded video controller with the following function blocks:

- Quad SPI Host Interface
- System Clock
- Graphics Engine
- Parallel RGB video interface
- Audio Engine
- Touch-screen support and interface
- Power Management

The functions for each block are briefly described in the following subsections.

4.1 Quad SPI Host Interface

The FT81x uses a quad serial parallel interface (QSPI) to communicate with host microcontrollers and microprocessors.

4.1.1 QSPI Interface

The QSPI slave interface operates up to 30MHz. Only SPI mode 0 is supported. Refer to section 6.4.2 for detailed timing specification. The QSPI can be configured as a SPI slave in SINGLE, DUAL or QUAD channel modes.

By default the SPI slave operates in the SINGLE channel mode with MOSI as input from the master and MISO as output to the master. DUAL and QUAD channel modes can be configured through the SPI slave itself. To change the channel modes, write to register REG_SPI_WIDTH. The table below depicts the setting.

Table 4-1 QSPI channel selection

REG_SPI_WIDTH[1:0]	Channel Mode	Data pins	Max bus speed
00	SINGLE – default mode	MISO, MOSI	30 MHz
01	DUAL	IO0, IO1	30 MHz
10	QUAD	IO0, IO1, IO2, IO3	25 MHz
11	Reserved	-	-

With DUAL/QUAD channel modes, the SPI data ports are now unidirectional. In these modes, each SPI transaction (signified by CS_N going active low) will begin with the data ports set as inputs.

Hence, for writing to the FT81x, the protocol will operate as in FT800, with "WR-Command/Addr2, Addr1, Addr0, DataX, DataY, DataZ …" The write operation is considered complete when CS_N goes inactive high.

For reading from the FT81x, the protocol will still operate as in FT800, with "RD-Command/Addr2, Addr1, Addr0, Dummy-Byte, DataX, DataY, DataZ". However as the data ports are now unidirectional, a change of port direction will occur before DataX is clocked out of the FT81x. Therefore it is important that the firmware controlling the SPI master changes the SPI master data port direction to "input" after transmitting Addr0. The FT81x will not change the port direction till it starts to clock out DataX. Hence, the Dummy-Byte cycles will be used as a change-over period when neither the SPI master nor slave will be driving the bus; the data paths thus must have pull-ups/pull-downs. The SPI slave from the FT81x will reset all its data ports' direction to input once CS_N goes inactive high (i.e. at the end of the current SPI master transaction).

The diagram depicts the behaviour of both the SPI master and slave in the master read case.

Copyright © 2015 Future Technology Devices International Limited

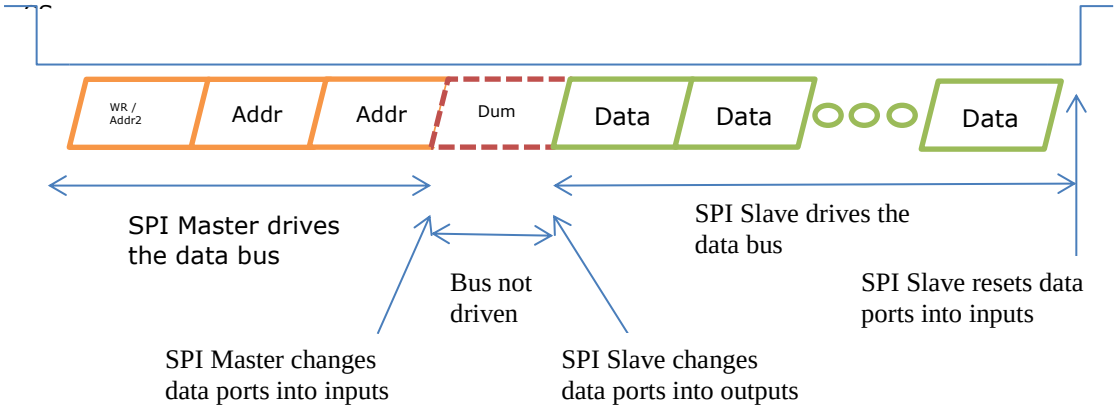

Figure 4-1 SPI master and slave in the master read case

In the DUAL channel mode, MISO (MSB) and MOSI are used while in the QUAD channel mode. IO3 (MSB), IO2, MISO and MOSI are used.

Figure 4-2 illustrates a direct connection to a 1.8-3.3V IO MPU/MCU with single or dual SPI interface.

Figure 4-3 illustrates a direct connection to a 1.8-3.3V IO MPU/MCU with Quad SPI interface.

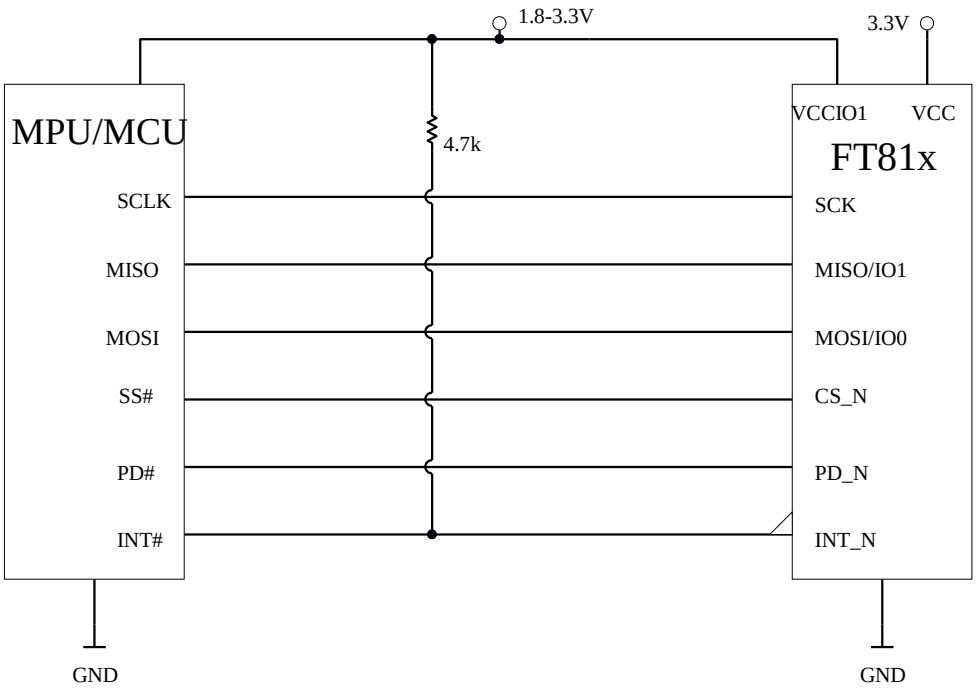

Figure 4-2 Single/Dual SPI Interface connection

Copyright © 2015 Future Technology Devices International Limited

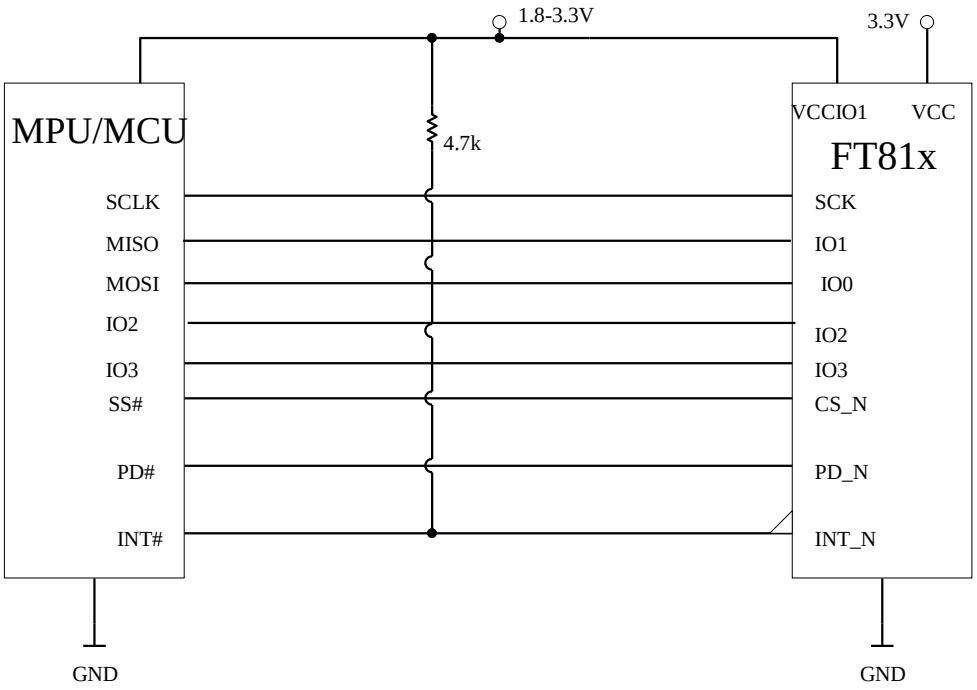

Figure 4-3 Quad SPI Interface connection

4.1.2 Serial Data Protocol

The FT81x appears to the host MPU/MCU as a memory-mapped SPI device. The host communicates with the FT81x using reads and writes to a large (4 megabyte) address space. Within this address space are dedicated areas for graphics, audio and touch control. Refer to section 5 for the detailed memory map.

The host reads and writes the FT81x address space using SPI transactions. These transactions are memory read, memory write and command write. Serial data is sent by the most significant bit first.

Each transaction starts with CS_N goes low, and ends when CS_N goes high. There's no limit on data length within one transaction, as long as the memory address is continuous.

4.1.3 Host Memory Read

For SPI memory read transactions, the host sends two zero bits, followed by the 22-bit address. This is followed by a dummy byte. After the dummy byte, the FT81x responds to each host byte with read data bytes.

Table 4-2 Host memory read transaction

7	6	5	4	3	2	1	0	
0	0	Address [21:16]						Write Address
Address [15:8]								
Address [7:0]								
Dummy byte								
Byte 0								Read Data
Byte *n*								

Copyright © 2015 Future Technology Devices International Limited

4.1.4 Host Memory Write

For SPI memory write transactions, the host sends a '1' bit and '0' bit, followed by the 22-bit address. This is followed by the write data.

Table 4-3 Host memory write transaction

7	6	5	4	3	2	1	0	
1	0	Address [21:16]						Write Address
Address [15:8]								
Address [7:0]								
Byte 0								Write Data
Byte *n*								

4.1.5 Host Command

When sending a command, the host transmits a 3 byte command. Table 4-5 Host command lists all the host command functions.

For SPI command transactions, the host sends a '0' bit and '1' bit, followed by the 6-bit command code. The 2nd byte can be either 00h, or the parameter of that command. The 3rd byte is fixed at 00h.

All SPI commands except the system reset can only be executed when the SPI is in the Single channel mode. They will be ignored when the SPI is in either Dual or Quad channel mode.

Some commands are used to configure the device and these configurations will be reset upon receiving the SPI PWRDOWN command, except those that configure the pin state during power down. These commands will be sticky unless reconfigured or power-on-reset (POR) occurs.

Table 4-4 Host command transaction

7	6	5	4	3	2	1	0	
0	1	Command [5:0]						1st Byte
Parameter for the command								2nd Byte
0	0	0	0	0	0	0	0	3rd Byte

Table 4-5 Host command list

1st Byte	2nd byte	3rd byte	Command	Description
Power Modes				
00000000b	00000000b	00000000b	00h ACTIVE	Switch from Standby/Sleep/PWRDOWN modes to active mode. Dummy memory read from address 0(read twice) generates ACTIVE command.

Copyright © 2015 Future Technology Devices International Limited

<table>
<tr><th>1st Byte</th><th>2nd byte</th><th>3rd byte</th><th>Command</th><th>Description</th></tr>
<tr><td>01000001b</td><td>00000000b</td><td>00000000b</td><td>41h
STANDBY</td><td>Put FT81x core to standby mode. Clock gate off, PLL and Oscillator remain on (default). ACTIVE command to wake up.</td></tr>
<tr><td>01000010b</td><td>00000000b</td><td>00000000b</td><td>42h
SLEEP</td><td>Put FT81x core to sleep mode. Clock gate off, PLL and Oscillator off. ACTIVE command to wake up.</td></tr>
<tr><td>01000011b
01010000b</td><td>00000000b</td><td>00000000b</td><td>43h/50h
PWRDOWN</td><td>Switch off 1.2V core voltage to the digital core circuits. Clock, PLL and Oscillator off. SPI is alive. ACTIVE command to wake up.</td></tr>
<tr><td>01000100b</td><td>xx</td><td>00000000b</td><td>49h
PD_ROMS</td><td>Select power down individual ROMs; Byte2 determines which ROM to power down or up. A 1 on a bit powers down the corresponding block; a 0 on a bit powers up the corresponding block. As these are not readable, the host must remember the setting on its own.
<table><tr><td>Byte2[7]</td><td>ROM_MAIN</td></tr><tr><td>Byte2[6]</td><td>ROM_RCOSATAN</td></tr><tr><td>Byte2[5]</td><td>ROM_SAMPLE</td></tr><tr><td>Byte2[4]</td><td>ROM_JABOOT</td></tr><tr><td>Byte2[3]</td><td>ROM_J1BOOT</td></tr><tr><td>Byte2[2-0]</td><td>reserved</td></tr></table></td></tr>
<tr><td colspan="5">Clock and Reset</td></tr>
<tr><td>01000100b</td><td>00000000b</td><td>00000000b</td><td>44h
CLKEXT</td><td>Select PLL input from external crystal oscillator or external input clock. No effect if external clock is already selected, otherwise a system reset will be generated</td></tr>
<tr><td>01001000b</td><td>00000000b</td><td>00000000b</td><td>48h
CLKINT</td><td>Select PLL input from internal relaxation oscillator (default). No effect if internal clock is already selected, otherwise a system reset will be generated</td></tr>
<tr><td>01100001b
01100010b</td><td>xx</td><td>00000000b</td><td>61h/62h
CLKSEL</td><td>This command will only be effective when the PLL is stopped (SLEEP mode).
For compatibility to FT800/FT801, set Byte2 to 0x00. This will set the PLL clock back to default (60 MHz).
<table><tr><td>Byte2 [5:0]</td><td>sets the clock frequency</td></tr><tr><td>0</td><td>Set to default clock speed</td></tr><tr><td>1</td><td>Reserved</td></tr><tr><td>2 to 5</td><td>2 to 5 times the osc frequency (i.e. 24 to 60MHz with 12MHz oscillator)</td></tr></table></td></tr>
</table>

Copyright © 2015 Future Technology Devices International Limited

<table>
<tr><th>1st Byte</th><th>2nd byte</th><th>3rd byte</th><th>Command</th><th>Description</th></tr>
<tr><td></td><td></td><td></td><td></td><td>
<table>
<tr><td>Byte2 [7:6]</td><td>sets the PLL range</td></tr>
<tr><td>0</td><td>When Byte2[5:0] = 0, 2, 3</td></tr>
<tr><td>1</td><td>When Byte2[5:0] = 4, 5</td></tr>
</table>
</td></tr>
<tr><td>01101000b</td><td>00000000b</td><td>00000000b</td><td>68h
RST_PULSE</td><td>Send reset pulse to FT81x core. The behaviour is the same as POR except that settings done through SPI commands will not be affected</td></tr>
<tr><td colspan="5">Configuration</td></tr>
<tr><td>01110000b</td><td>xx</td><td>00000000b</td><td>70h
PINDRIVE</td><td>
This will set the drive strength for various pins. For FT800/FT801 compatibility, by default those settings are from the GPIO registers. FT81x supports setting the drive strength via SPI command instead.

When PINDRIVE for a pin from the SPI command is not updated, the drive strength will be determined by its corresponding GPIO register bits, if they exist. If they don’t exist, a hard coded setting is used. Please refer to Table 4-20 for default values.

When PINDRIVE for a pin from the SPI command is updated, it will override the corresponding setting in the GPIO register bits.

Byte2 determines which pin and the setting are to be updated.

Byte2[1:0] determine the drive strength:
<table>
<tr><td>Byte2 [1:0]</td><td colspan="2">Drive Strength</td></tr>
<tr><td>0h</td><td>5mA</td><td></td></tr>
<tr><td>1h</td><td>10.0mA</td><td></td></tr>
<tr><td>2h</td><td>15.0mA</td><td></td></tr>
<tr><td>3h</td><td>20.0mA</td><td></td></tr>
</table>
Byte[7:2] determine which pin/pin group to set:
<table>
<tr><td>Byte2 [7:2]</td><td>Pin / Pin Group</td></tr>
<tr><td>00h</td><td>GPIO 0</td></tr>
<tr><td>01h</td><td>GPIO 1</td></tr>
<tr><td>02h</td><td>GPIO 2</td></tr>
<tr><td>03h</td><td>GPIO 3</td></tr>
</table>
</td></tr>
</table>

Copyright © 2015 Future Technology Devices International Limited

<table>
<tr><th>1st Byte</th><th>2nd byte</th><th>3rd byte</th><th>Command</th><th>Description</th></tr>
<tr><td></td><td></td><td></td><td></td><td>
<table>
<tr><td>04-07h</td><td>Reserved</td></tr>
<tr><td>08h</td><td>DISP</td></tr>
<tr><td>09h</td><td>DE</td></tr>
<tr><td>0Ah</td><td>VSYNC / HSYNC</td></tr>
<tr><td>0Bh</td><td>PCLK</td></tr>
<tr><td>0Ch</td><td>BACKLIGHT</td></tr>
<tr><td>0Dh</td><td>R[7:0], G[7:0], B[7:0]</td></tr>
<tr><td>0Eh</td><td>AUDIO_L</td></tr>
<tr><td>0Fh</td><td>INT_N</td></tr>
<tr><td>10h</td><td>CTP_RST_N</td></tr>
<tr><td>11h</td><td>CTP_SCL</td></tr>
<tr><td>12h</td><td>CTP_SDA</td></tr>
<tr><td>13h</td><td>SPI MISO/MOSI/IO2/IO3</td></tr>
<tr><td>Others</td><td>Reserved</td></tr>
</table>
Note: GPIO0 shares the same pin as SPI IO2 and GPIO1 with SPI IO3. When SPI is set in Quad mode, IO2 and IO3 will inherit the drive strength set in GROUP 13h; otherwise GPIO0 and GPIO1 will inherit the drive strength from GROUP 00h and 01h respectively.
</td></tr>
<tr><td>01110001b</td><td>xx</td><td>00000000b</td><td>71h
PIN_PD_STATE</td><td>
During power down, all output and in/out pins will not be driven. Please refer to Table 4-20 for their default power down state.

These settings will only be effective during power down and will not affect normal operations. Also note that these configuration bits are sticky and, unlike other configuration bits, will not reset to default values upon exiting power down. Only POR will reset them.

Byte2 determines which pin and the setting are to be updated.

Byte2[1:0] determine the pin state.
<table>
<tr><td>Byte2 [1:0]</td><td>Pin Setting</td></tr>
<tr><td>0h</td><td>Float</td></tr>
<tr><td>1h</td><td>Pull-Down</td></tr>
</table>
</td></tr>
</table>

Copyright © 2015 Future Technology Devices International Limited

1st Byte	2nd byte	3rd byte	Command	Description
				2h: Pull-Up 3h: Reserved Byte2[7:2] determine which pin/pin group to set. Please refer to the table in command PINDRIVE entry.

NOTE: Any command code not specified is reserved and should not be used by the software

4.1.6 Interrupts

The interrupt output pin is enabled by REG_INT_EN. When REG_INT_EN is 0, INT_N is tri-state (pulled to high by external pull-up resistor). When REG_INT_EN is 1, INT_N is driven low when any of the interrupt flags in REG_INT_FLAGS are high, after masking with REG_INT_MASK. Writing a '1' in any bit of REG_INT_MASK will enable the corresponding interrupt. Each bit in REG_INT_FLAGS is set by a corresponding interrupt source. REG_INT_FLAGS is readable by the host at any time, and clears when read.

The INT_N pin is open-drain (OD) output by default. It can be configured to push-pull output by register REG_GPIOX.

Table 4-6 Interrupt Flags bit assignment

Bit	7	6	5	4
Interrupt Sources	CONVCOMPLETE	CMDFLAG	CMDEMPTY	PLAYBACK
Conditions	Touch-screen conversions completed	Command FIFO flag	Command FIFO empty	Audio playback ended
Bit	3	2	1	0
Interrupt Sources	SOUND	TAG	TOUCH	SWAP
Conditions	Sound effect ended	Touch-screen tag value change	touch detected	Display list swap occurred

4.2 System Clock

4.2.1 Clock Source

The FT81x can be configured to use any of the three clock sources for system clock:

- Internal relaxation oscillator clock (default)
- External 12MHz crystal
- External 12MHz square wave clock

Figure 4-4, Figure 4-5 and Figure 4-6 show the pin connections for these clock options.

Copyright © 2015 Future Technology Devices International Limited

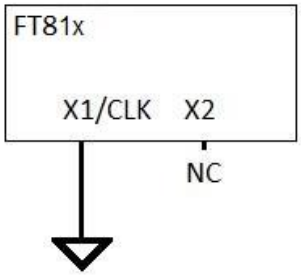

Figure 4-4 Internal relaxation oscillator connection

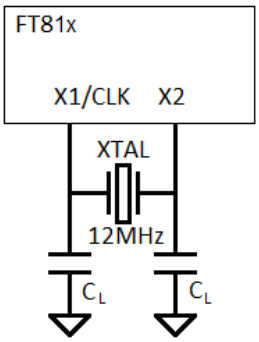

Figure 4-5 Crystal oscillator connection

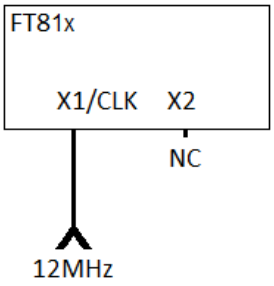

Figure 4-6 External clock input

4.2.2 Phase Locked Loop

The internal PLL takes an input clock from the oscillator, and generates clocks to all internal circuits, including the graphics engine, audio engine and touch engine.

4.2.3 Clock Enable

At power-on the FT81x enters sleep mode. The internal relaxation oscillator is selected for the PLL clock source. The system clock will be enabled when the following step is executed:

- Host sends an "ACTIVE" command

If the application chooses to use the external clock source (12MHz crystal or clock), the following steps shall be executed:

- Host sends a "CLKEXT" command
- Host sends an "ACTIVE" command

Copyright © 2015 Future Technology Devices International Limited

4.2.4 Clock Frequency

By default the system clock is 60MHz when the input clock is 12MHz. The host is allowed to switch the system clock to other frequencies (48MHz, 36MHz, 24MHz) by the host command "CLKSEL". The clock switching command shall be sent in SLEEP mode only.

When using the internal relaxation oscillator, its clock frequency is trimmed to be 12MHz at factory. Software is allowed to change the frequency to a lower value by programming the register REG_TRIM. Note that software shall not change the internal oscillator frequency to be higher than 12MHz.

4.3 Graphics Engine

4.3.1 Introduction

The graphics engine executes the display list once for every horizontal line. It executes the primitive objects in the display list and constructs the display line buffer. The horizontal pixel content in the line buffer is updated if the object is visible at the horizontal line.

Main features of the graphics engine are:

- The primitive objects supported by the graphics processor are: lines, points, rectangles, bitmaps (comprehensive set of formats), text display, plotting bar graph, edge strips, and line strips, etc.
- Operations such as stencil test, alpha blending and masking are useful for creating a rich set of effects such as shadows, transitions, reveals, fades and wipes.
- Anti-aliasing of the primitive objects (except bitmaps) gives a smoothing effect to the viewer.
- Bitmap transformations enable operations such as translate, scale and rotate.
- Display pixels are plotted with 1/16th pixel precision.
- Four levels of graphics states
- Tag buffer detection

The graphics engine also supports customized built-in widgets and functionalities such as jpeg decode, screen saver, calibration etc. The graphics engine interprets commands from the MPU host via a 4 Kbyte FIFO in the FT81x memory at RAM_CMD. The MPU/MCU writes commands into the FIFO, and the graphics engine reads and executes the commands. The MPU/MCU updates the register REG_CMD_WRITE to indicate that there are new commands in the FIFO, and the graphics engine updates REG_CMD_READ after commands have been executed.

Main features supported are:

- Drawing of widgets such as buttons, clock, keys, gauges, text displays, progress bars, sliders, toggle switches, dials, gradients, etc.
- JPEG and motion-JPEG decode
- Inflate functionality (zlib inflate is supported)
- Timed interrupt (generate an interrupt to the host processor after a specified number of milliseconds)
- In-built animated functionalities such as displaying logo, calibration, spinner, screen saver and sketch
- Snapshot feature to capture the current graphics display

For a complete list of graphics engine display commands and widgets refer to FT81x Series Programmer Guide, Chapter 4.

4.3.2 ROM and RAM Fonts

The FT81x has built in ROM character bitmaps as font metrics. The graphics engine can use these metrics when drawing text fonts. There are a total of 19 ROM fonts, numbered with font handle 16-34. The user can define and load customized font metrics into RAM_G, which can be used by display command with handle 0-15.

Each font metric block has a 148 byte font table which defines the parameters of the font and the pointer of font image. The font table format is shown in Table 4-7.

Copyright © 2015 Future Technology Devices International Limited

Table 4-7 Font table format

Address Offset	Size(byte)	Parameter Description
0	128	width of each font character, in pixels
128	4	font bitmap format, for example L1, L4 or L8
132	4	font line stride, in bytes
136	4	font width, in pixels
140	4	font height, in pixels
144	4	pointer to font image data in memory

The ROM fonts are stored in the memory space ROM_FONT. The ROM font table is also stored in the ROM. The starting address of the ROM font table for font index 16 is stored at ROM_FONT_ADDR, with other font tables following. The ROM font table and individual character width (in pixel) are listed in Table 4-8 through Table 4-10. Font index 16, 18 and 20-31 are for basic ASCII characters (code 0-127), while font index 17 and 19 are for Extended ASCII characters (code 128-255). The character width for font index 16 through 19 is fixed at 8 pixels for any of the ASCII characters.

Table 4-8 ROM font table

Font Index	16	17	18	19	20	21	22	23	24	25	26	27	28	29	30	31	32	33	34
Font format	L1	L1	L1	L1	L1	L1	L1	L1	L1	L1	L4	L4	L4	L4	L4	L4	L4	L4	L4
Line stride	1	1	1	1	2	2	2	3	3	4	7	8	9	11	14	18	23	30	39
Font width (max)	8	8	8	8	11	13	17	18	25	34	13	15	19	21	28	37	49	63	82
Font height	8	8	16	16	13	17	20	22	29	38	16	20	25	28	36	49	63	83	108
Image pointer start address (hex)	2FF7FC	2FFBFC	2FE7FC	2FEFFC	2FDAFC	2FCD3C	2FBD7C	2FA17C	2F7E3C	2F3D1C	2F181C	2ED61C	2E799C	2DFBBC	2D263C	2BAC3C	2945FC	251E1C	1E1B5C

Table 4-9 ROM font ASCII character width in pixels

		Font Index =>	16/18	20	21	22	23	24	25	26	27	28	29	30	31	32	33	34
ASCII Character width in pixels	0	NULL	8	0	0	0	0	0	0	0	0	0	0	0	0	0	0	0
	1	SOH	8	0	0	0	0	0	0	0	0	0	0	0	0	0	0	0
	2	STX	8	0	0	0	0	0	0	0	0	0	0	0	0	0	0	0
	3	ETX	8	0	0	0	0	0	0	0	0	0	0	0	0	0	0	0
	4	EOT	8	0	0	0	0	0	0	0	0	0	0	0	0	0	0	0
	5	ENQ	8	0	0	0	0	0	0	0	0	0	0	0	0	0	0	0
	6	ACK	8	0	0	0	0	0	0	0	0	0	0	0	0	0	0	0
	7	BEL	8	0	0	0	0	0	0	0	0	0	0	0	0	0	0	0
	8	BS	8	0	0	0	0	0	0	0	0	0	0	0	0	0	0	0
	9	HT	8	0	0	0	0	0	0	0	0	0	0	0	0	0	0	0
	10	LF	8	0	0	0	0	0	0	0	0	0	0	0	0	0	0	0
	11	VT	8	0	0	0	0	0	0	0	0	0	0	0	0	0	0	0
	12	FF	8	0	0	0	0	0	0	0	0	0	0	0	0	0	0	0
	13	CR	8	0	0	0	0	0	0	0	0	0	0	0	0	0	0	0
	14	SO	8	0	0	0	0	0	0	0	0	0	0	0	0	0	0	0
	15	SI	8	0	0	0	0	0	0	0	0	0	0	0	0	0	0	0
	16	DLE	8	0	0	0	0	0	0	0	0	0	0	0	0	0	0	0
	17	DC1	8	0	0	0	0	0	0	0	0	0	0	0	0	0	0	0
	18	DC2	8	0	0	0	0	0	0	0	0	0	0	0	0	0	0	0
	19	DC3	8	0	0	0	0	0	0	0	0	0	0	0	0	0	0	0
	20	DC4	8	0	0	0	0	0	0	0	0	0	0	0	0	0	0	0

Copyright © 2015 Future Technology Devices International Limited

Font Index =>		16/18	20	21	22	23	24	25	26	27	28	29	30	31	32	33	34
21	NAK	8	0	0	0	0	0	0	0	0	0	0	0	0	0	0	0
22	SYN	8	0	0	0	0	0	0	0	0	0	0	0	0	0	0	0
23	ETB	8	0	0	0	0	0	0	0	0	0	0	0	0	0	0	0
24	CAN	8	0	0	0	0	0	0	0	0	0	0	0	0	0	0	0
25	EM	8	0	0	0	0	0	0	0	0	0	0	0	0	0	0	0
26	SUB	8	0	0	0	0	0	0	0	0	0	0	0	0	0	0	0
27	ESC	8	0	0	0	0	0	0	0	0	0	0	0	0	0	0	0
28	FS	8	0	0	0	0	0	0	0	0	0	0	0	0	0	0	0
29	GS	8	0	0	0	0	0	0	0	0	0	0	0	0	0	0	0
30	RS	8	0	0	0	0	0	0	0	0	0	0	0	0	0	0	0
31	US	8	0	0	0	0	0	0	0	0	0	0	0	0	0	0	0
32	space	8	3	4	5	5	6	9	3	4	5	6	8	10	13	18	23
33	!	8	3	4	5	6	6	9	3	4	6	6	9	11	15	19	25
34	"	8	4	5	6	5	8	12	5	6	7	8	12	15	19	25	33
35	#	8	6	8	9	10	14	19	10	11	14	15	19	26	33	44	57
36	$	8	6	8	9	10	13	18	8	10	11	15	18	25	31	41	54
37	%	8	9	12	14	16	22	29	11	13	16	17	23	31	40	52	68
38	&	8	8	10	11	13	17	22	9	11	14	15	19	26	34	44	57
39	'	8	2	3	3	3	6	6	3	4	4	5	7	10	11	15	20
40	(	8	4	5	6	6	8	11	5	6	7	9	11	15	18	24	31
41	)	8	4	5	6	6	8	11	5	6	8	8	10	14	18	24	31
42	*	8	4	7	6	7	10	13	7	8	10	11	14	18	24	31	40
43	+	8	6	9	10	10	14	19	9	10	12	14	17	24	30	41	52
44	,	8	3	3	4	5	6	9	3	4	4	5	7	9	12	16	20
45	-	8	4	4	5	6	8	11	6	7	10	11	15	18	24	32	41
46	.	8	3	3	4	5	6	9	3	4	6	7	8	11	14	19	24
47	/	8	3	4	5	5	7	9	6	7	9	10	13	17	22	29	38
48	0	8	6	8	9	10	13	18	8	10	12	14	17	24	30	40	52
49	1	8	6	8	9	10	13	18	8	10	12	14	17	24	30	40	52
50	2	8	6	8	9	10	13	18	8	10	12	14	17	24	30	40	52
51	3	8	6	8	9	10	13	18	8	10	12	14	17	24	30	40	52
52	4	8	6	8	9	10	13	18	8	10	12	14	17	24	30	40	52
53	5	8	6	8	9	10	13	18	8	10	12	14	17	24	30	40	52
54	6	8	6	8	9	10	13	18	8	10	12	14	17	24	30	40	52
55	7	8	6	8	9	10	13	18	8	10	12	14	17	24	30	40	52
56	8	8	6	8	9	10	13	18	8	10	12	14	17	24	30	40	52
57	9	8	6	8	9	10	13	18	8	10	12	14	17	24	30	40	52
58	:	8	3	3	4	5	6	9	3	4	6	6	7	10	13	18	23
59	;	8	3	4	4	5	6	9	3	4	6	6	8	10	14	18	23
60	<	8	6	8	10	10	15	19	8	9	11	12	16	21	28	36	46
61	=	8	5	9	10	11	15	19	8	9	13	14	18	23	30	40	52
62	>	8	6	8	10	10	15	19	8	9	11	13	16	22	29	37	48
63	?	8	6	8	9	10	12	18	7	9	10	12	15	20	26	34	44
64	@	8	11	13	17	18	25	34	13	15	19	21	28	37	49	63	82
65	A	8	7	9	11	13	17	22	9	11	13	15	20	27	34	45	58
66	B	8	7	9	11	13	17	22	9	10	14	15	19	27	34	45	58
67	C	8	8	10	12	14	18	24	9	11	13	15	20	26	34	45	58
68	D	8	8	10	12	14	18	24	9	11	14	17	22	28	36	48	63
69	E	8	7	9	11	13	16	22	7	9	12	13	16	23	29	39	50
70	F	8	6	8	10	12	14	20	7	9	12	13	17	22	29	39	50
71	G	8	8	11	13	15	19	25	9	11	14	16	22	28	37	48	62
72	H	8	8	10	12	14	18	24	9	11	15	17	23	29	37	50	65
73	I	8	3	4	4	6	8	9	4	5	6	7	9	12	15	20	26
74	J	8	5	7	8	10	13	16	8	9	12	13	17	23	30	40	50
75	K	8	7	9	11	13	18	22	9	11	14	16	19	26	34	45	58

Copyright © 2015 Future Technology Devices International Limited

Font Index =>		16/18	20	21	22	23	24	25	26	27	28	29	30	31	32	33	34
76	L	8	6	8	9	11	14	18	7	9	12	13	17	22	29	39	51
77	M	8	9	12	13	16	21	27	11	14	19	21	26	35	46	62	79
78	N	8	8	10	12	14	18	24	9	11	15	17	23	29	37	50	65
79	O	8	8	11	13	15	18	25	10	12	14	16	22	28	37	49	63
80	P	8	7	9	11	13	16	22	9	10	14	15	19	26	34	45	58
81	Q	8	8	11	13	15	18	26	10	12	14	17	22	29	38	50	64
82	R	8	7	10	12	14	17	24	9	11	13	15	19	27	33	45	58
83	S	8	7	9	11	13	16	22	9	11	12	14	20	26	33	43	56
84	T	8	5	9	10	12	16	20	10	12	14	15	19	26	32	42	56
85	U	8	8	10	12	14	18	24	9	11	13	17	21	28	37	48	62
86	V	8	7	9	11	13	17	22	9	11	14	15	20	27	34	45	58
87	W	8	9	13	15	18	22	31	12	15	18	21	27	36	46	61	79
88	X	8	7	9	11	13	17	22	9	11	13	15	20	27	34	45	58
89	Y	8	7	9	11	13	16	22	9	10	14	15	19	26	34	45	58
90	Z	8	7	9	10	12	15	20	9	11	13	14	18	25	32	42	55
91	[	8	3	4	5	5	7	9	4	5	6	7	9	12	15	19	25
92	\	8	3	4	5	5	7	9	6	7	9	10	13	18	22	29	38
93	]	8	3	4	5	5	7	9	4	5	7	7	9	12	15	19	25
94	^	8	6	7	8	9	12	16	6	7	9	10	13	18	23	30	38
95	_	8	6	8	9	11	14	18	8	10	11	13	16	21	26	34	43
96	`	8	3	5	6	4	7	11	4	5	7	8	10	13	17	22	29
97	a	8	5	8	9	11	13	18	8	9	11	13	17	23	30	39	50
98	b	8	6	7	9	11	14	18	8	9	11	14	17	24	31	40	52
99	c	8	5	7	8	10	12	16	8	9	11	12	16	22	28	37	48
100	d	8	6	8	9	11	14	18	8	10	12	14	17	24	31	40	52
101	e	8	5	8	9	10	13	18	8	9	11	12	16	22	29	37	48
102	f	8	4	4	5	6	8	9	6	7	8	10	12	15	19	25	31
103	g	8	6	8	9	11	14	18	8	10	11	14	18	24	31	41	52
104	h	8	6	8	9	10	13	18	8	9	11	14	17	24	31	41	52
105	i	8	2	3	3	4	6	7	3	4	6	6	7	10	13	18	23
106	j	8	2	3	4	4	6	7	3	4	6	6	8	11	14	18	23
107	k	8	5	7	8	9	12	16	7	9	11	13	16	22	28	36	47
108	l	8	2	3	3	4	6	7	3	4	6	6	7	10	13	18	23
109	m	8	8	11	14	16	20	27	11	15	18	21	27	36	47	63	80
110	n	8	6	8	9	10	14	18	8	9	11	14	17	24	31	41	52
111	o	8	6	8	9	11	13	18	8	10	12	13	17	24	31	40	52
112	p	8	6	8	9	11	14	18	8	9	11	14	17	24	31	40	51
113	q	8	6	8	9	11	14	18	8	10	12	13	17	24	31	40	52
114	r	8	4	5	5	6	9	11	5	6	7	9	11	15	19	25	32
115	s	8	5	7	8	9	12	16	7	9	11	12	17	22	29	38	48
116	t	8	4	4	5	6	8	9	6	7	8	9	11	14	17	23	29
117	u	8	5	7	9	10	14	18	8	9	12	14	17	24	31	41	52
118	v	8	6	7	8	10	13	16	7	9	11	12	16	21	27	36	46
119	w	8	8	10	12	14	18	23	11	13	16	18	23	32	41	54	70
120	x	8	6	7	8	10	12	16	7	9	11	12	16	21	27	36	46
121	y	8	5	7	8	10	13	16	7	9	11	12	16	21	27	36	46
122	z	8	5	7	8	9	12	16	8	9	11	12	15	22	27	36	46
123	{	8	3	5	6	6	8	11	5	6	8	8	11	15	18	24	31
124	|	8	3	3	4	5	6	9	3	4	5	6	7	10	14	18	23
125	}	8	3	5	6	6	8	11	5	6	7	9	10	15	18	24	31
126	~	8	7	8	10	10	14	19	10	11	14	15	21	29	36	47	63
127	DEL	8	0	0	0	0	0	0	3	4	5	6	5	10	13	18	23

Table 4-10 ROM font Extended ASCII characters

Copyright © 2015 Future Technology Devices International Limited

Decimal	Symbol	Decimal	Symbol	Decimal	Symbol	Decimal	Symbol	Decimal	Symbol	Decimal	Symbol	Decimal	Symbol	Decimal	Symbol
128	Ç	144	É	160	á	176	▒	192	└	208	ð	224	Ó	240	-
129	ü	145	æ	161	í	177	▒	193	┴	209	Ð	225	ß	241	±
130	é	146	Æ	162	ó	178	▓	194	┬	210	Ê	226	Ô	242	‗
131	â	147	ô	163	ú	179	│	195	├	211	Ë	227	Ò	243	¾
132	ä	148	ö	164	ñ	180	┤	196	─	212	È	228	õ	244	¶
133	à	149	ò	165	Ñ	181	Á	197	┼	213	ı	229	Õ	245	§
134	å	150	û	166	ª	182	Â	198	ã	214	Í	230	µ	246	÷
135	ç	151	ù	167	º	183	À	199	Ã	215	Î	231	þ	247	¸
136	ê	152	ÿ	168	¿	184	©	200	╚	216	Ï	232	Þ	248	°
137	ë	153	Ö	169	®	185	╣	201	╔	217	┘	233	Ú	249	¨
138	è	154	Ü	170	¬	186	║	202	╩	218	┌	234	Û	250	·
139	ï	155	ø	171	½	187	╗	203	╦	219	█	235	Ù	251	¹
140	î	156	£	172	¼	188	╝	204	╠	220	▄	236	ý	252	³
141	ì	157	Ø	173	¡	189	¢	205	═	221	¦	237	Ý	253	²
142	Ä	158	×	174	«	190	¥	206	╬	222	Ì	238	¯	254	■
143	Å	159	ƒ	175	»	191	┐	207	¤	223	▀	239	´	255	nbsp

Note: Font 17 and 19 are extended ASCII characters, with width fixed at 8 pixels for all characters.

Note: All fonts included in the FT81x ROM are widely available to the market-place for general usage. See section nine for specific copyright data and links to the corresponding license agreements.

4.4 Parallel RGB Interface

The RGB parallel interface consists of 23 or 29 signals - DISP, PCLK, VSYNC, HSYNC, DE, 6 or 8 signals each for R, G and B.

A set of RGB registers configure the LCD operation and timing parameters.

REG_PCLK is the PCLK divisor. The default value is 0, which means the PCLK output is disabled. When REG_PCLK is none 0 (1-1023), the PCLK frequency can be calculated as:

PCLK frequency = System Clock frequency / REG_PCLK

The FT81x system clock frequency is programmable. Some of the possible PCLK frequencies that FT81x supports are listed in Table 4-11.

Table 4-11 RGB PCLK frequency

REG_PCLK	System Clock Frequency (MHz)			
	60(default)	48	36	24
1	60	48	36	24
2	30	24	18	12
3	20	16	12	8.0
4	15	12	9.0	6.0
5	12	9.6	7.2	4.8
6	10	8.0	6.0	4.0
7	8.6	6.9	5.1	3.4

Copyright © 2015 Future Technology Devices International Limited

REG_PCLK	System Clock Frequency (MHz)			
	60(default)	48	36	24
8	7.5	6.0	4.5	3.0
9	6.7	5.3	4.0	2.7
10	6.0	4.8	3.6	2.4

REG_PCLK_POL defines the clock polarity, with 0 for positive active clock edge, and 1 for negative clock edge.

REG_CSPREAD controls the transition of RGB signals with respect to the PCLK active clock edge. When REG_CSPREAD=0, R[7:0], G[7:0] and B[7:0] signals change following the active edge of PCLK. When REG_CSPREAD=1, R[7:0] changes a PCLK clock early and B[7:0] a PCLK clock later, which helps reduce the switching noise.

REG_DITHER enables colour dither. This option improves the half-tone appearance on displays. Internally, the graphics engine computes the colour values at an 8 bit precision; however, the LCD colour at a lower precision is sufficient. The FT810/FT811 output is only 6 bits per colour in 6:6:6 formats and a 2X2 dither matrix allow the truncated bits to contribute to the final colour values.

REG_OUTBITS gives the bit width of each colour channel, the default is 6/6/6(for FT810/FT811) or 8/8/8(for FT812/FT813) bits for each R/G/B colour. A lower value means fewer bits are output for each channel allowing dithering on lower precision LCD displays.

REG_SWIZZLE controls the arrangement of the output colour pins, to help the PCB route different LCD panel arrangements. Bit 0 of the register causes the order of bits in each colour channel to be reversed. Bits 1-3 control the RGB order. Setting Bit 1 causes R and B channels to be swapped. Setting Bit 3 allows rotation to be enabled. If Bit 3 is set, then (R,G,B) is rotated right if bit 2 is one, or left if bit 2 is zero.

Table 4-12 REG_SWIZZLE RGB Pins Mapping

REG_SWIZZLE				PINS (FT810/FT811, 6 bits)			PINS (FT812/FT813, 8 bits)		
b3	b2	b1	b0	R7, R6, R5, R4, R3, R2	G7, G6, G5, G4, G3, G2	B7, B6, B5, B4, B3, B2	R7, R6, R5, R4, R3, R2, R1, R0	G7, G6, G5, G4, G3, G2, G1, G0	B7, B6, B5, B4, B3, B2, B1, B0
0	X	0	0	R[7:2]	G[7:2]	B[7:2]	R[7:0]	G[7:0]	B[7:0]
0	X	0	1	R[2:7]	G[2:7]	B[2:7]	R[0:7]	G[0:7]	B[0:7]
0	X	1	0	B[7:2]	G[7:2]	R[7:2]	B[7:0]	G[7:0]	R[7:0]
0	X	1	1	B[2:7]	G[2:7]	R[2:7]	B[0:7]	G[0:7]	R[0:7]
1	0	0	0	B[7:2]	R[7:2]	G[7:2]	B[7:0]	R[7:0]	G[7:0]
1	0	0	1	B[2:7]	R[2:7]	G[2:7]	B[0:7]	R[0:7]	G[0:7]
1	0	1	0	G[7:2]	R[7:2]	B[7:2]	G[7:0]	R[7:0]	B[7:0]
1	0	1	1	G[2:7]	R[2:7]	B[2:7]	G[0:7]	R[0:7]	B[0:7]
1	1	0	0	G[7:2]	B[7:2]	R[7:2]	G[7:0]	B[7:0]	R[7:0]
1	1	0	1	G[2:7]	B[2:7]	R[2:7]	G[0:7]	B[0:7]	R[0:7]
1	1	1	0	R[7:2]	B[7:2]	G[7:2]	R[7:0]	B[7:0]	G[7:0]
1	1	1	1	R[2:7]	B[2:7]	G[2:7]	R[0:7]	B[0:7]	G[0:7]

REG_HCYCLE, REG_HSIZE, REG_HOFFSET, REG_HSYNC0 and REG_HSYNC1 define the LCD horizontal timings. Each register has 12 bits to allow programmable range of 0-4095 PCLK cycles. REG_VCYCLE, REG_VSIZE, REG_VOFFSET, REG_VSYNC0 and REG_VSYNC1 define the LCD vertical timings. Each register has 12 bits to allow programmable range of 0-4095 lines.

Table 4-13 Registers for RGB horizontal and vertical timings

Copyright © 2015 Future Technology Devices International Limited

	Register	Display Parameter	Description
Horizontal	REG_HCYCLE	T_H	**Total** length of line (visible and non-visible) (in PCLKs)
	REG_HSIZE	T_{HD}	Length of **visible** part of line (in PCLKs)
	REG_HOFFSET	$T_{HF} + T_{HP} + T_{HB}$	Length of **non-visible** part of line (in PCLK cycles)
	REG_HSYNC0	T_{HF}	Horizontal Front Porch (in PCLK cycles)
	REG_HSYNC1	$T_{HF} + T_{HP}$	Horizontal Front Porch plus Hsync Pulse width (in PCLK cycles)
Vertical	REG_VCYCLE	T_V	**Total** number of lines (visible and non-visible) (in lines)
	REG_VSIZE	T_{VD}	Number of **visible** lines (in lines)
	REG_VOFFSET	$T_{VF} + T_{VP} + T_{VB}$	Number of **non-visible** lines (in lines)
	REG_VSYNC0	T_{VF}	Vertical Front Porch (in lines)
	REG_VSYNC1	$T_{VF} + T_{VP}$	Vertical Front Porch plus Vsync Pulse width (in lines)

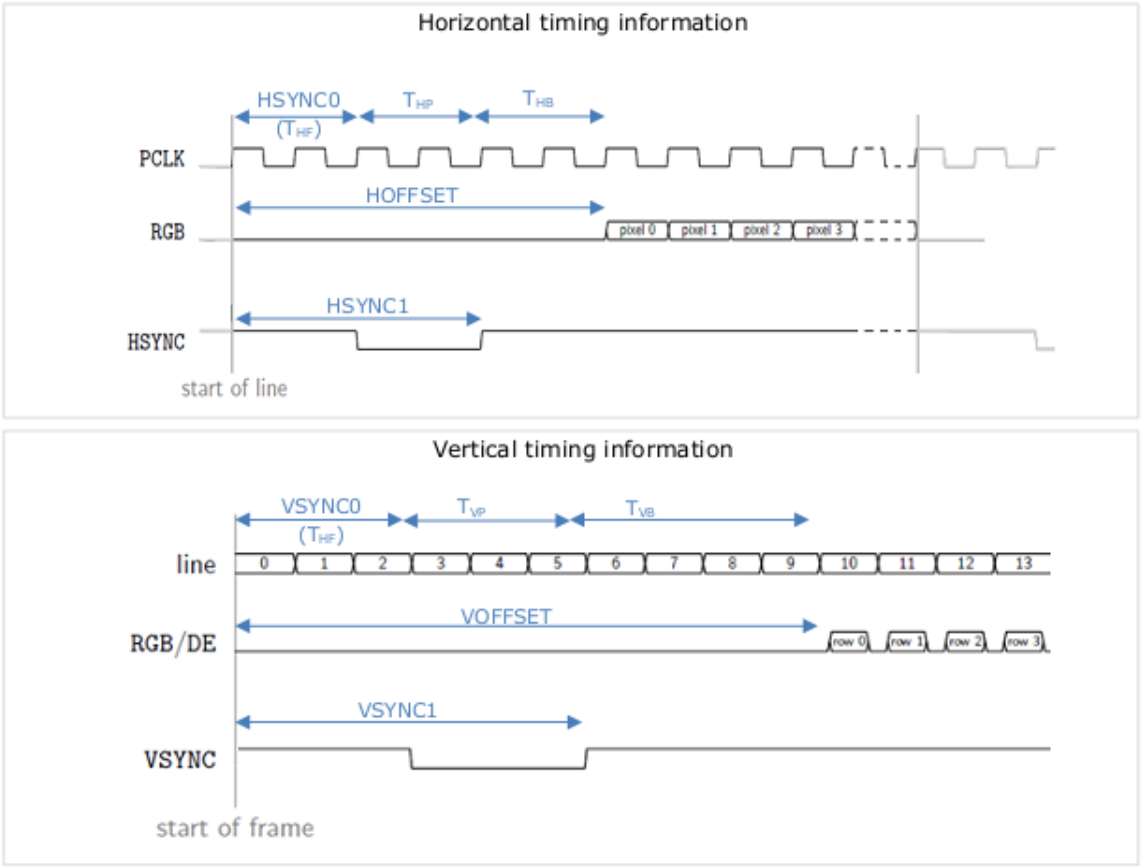

Figure 4-7 RGB timing waveforms

4.5 Miscellaneous Control

Copyright © 2015 Future Technology Devices International Limited

4.5.1 Backlight Control Pin

The backlight dimming control pin (BACKLIGHT) is a pulse width modulated (PWM) signal controlled by two registers: *REG_PWM_HZ* and *REG_PWM_DUTY*. REG_PWM_HZ specifies the PWM output frequency, the range is 250-10000 Hz. REG_PWM_DUTY specifies the duty cycle; the range is 0-128. A value of 0 means that the PWM is completely off and 128 means completely on.
The BACKLIGHT pin will output low when the DISP pin is not enabled (i.e. logic 0).

4.5.2 DISP Control Pin

The DISP pin is a general purpose output that can be used to enable, or reset the LCD display panel. The pin is controlled by writing to Bit 7 of the REG_GPIO register, or bit 15 of REG_GPIOX.

4.5.3 General Purpose IO pins

Depending on the package, the FT81x can be configured to use up to 4 GPIO pins. These GPIO pins are controlled by the REG_GPIOX_DIR and REG_GPIOX registers. Alternatively the GPIO0 and GPIO1 pins can also be controlled by REG_GPIO_DIR and REG_GPIO to maintain backward compatibility with the FT800/FT801.

When the QSPI is enabled in Quad mode, GPIO0/IO2 and GPIO1/IO3 pins are used as data lines of the QSPI.

4.5.4 Pins Drive Current Control

The output drive current of output pins can be changed as per the following table by writing to bit[6:2] of REG_GPIO register or bit[14:10] of REG_GPIOX register. Alternatively, use the SPI command PINDRIVE to change the individual pin drive strength.

Table 4-14 Output drive current selection

REG_GPIO	Bit[6:5]				Bit[4]		Bit[3:2]			
REG_GPIOX	Bit[14:13]				Bit[12]		Bit[11:10]			
Value	00b#	01b	10b	11b	0b#	1b	00b#	01b	10b	11b
Drive Current	5mA	10mA	15mA	20mA	5mA	10mA	5mA	10mA	15mA	20mA
Pins	GPIO0 GPIO1 GPIO2 GPIO3 CTP_RST_N				PCLK DISP VSYNC HSYNC DE R7..R0 G7..G0 B7..B0 BACKLIGHT		MISO MOSI IO2 IO3 INT_N			

Note: #Default value

Copyright © 2015 Future Technology Devices International Limited

4.6 Audio Engine

FT81x provides mono audio output through a PWM output pin, AUDIO_L. It outputs two audio sources, the sound synthesizer and audio file playback.

4.6.1 Sound Synthesizer

A sound processor, AUDIO ENGINE, generates the sound effects from a small ROM library of waves table. To play a sound effect listed in Table 4.3, load the REG_SOUND register with a code value and write 1 to the REG_PLAY register. The REG_PLAY register reads 1 while the effect is playing and returns a '0' when the effect ends. Some sound effects play continuously until interrupted or instructed to play the next sound effect. To interrupt an effect, write a new value to REG_SOUND and REG_PLAY registers; e.g. write 0 (Silence) to REG_SOUND and 1 to PEG_PLAY to stop the sound effect.

The sound volume is controlled by register REG_VOL_SOUND. The 16-bit REG_SOUND register takes an 8-bit sound in the low byte. For some sounds, marked "pitch adjust" in the table below, the high 8 bits contain a MIDI note value. For these sounds, a note value of zero indicates middle C. For other sounds the high byte of REG_SOUND is ignored.

Table 4-15 Sound Effect

Value	Effect	Continuous	Pitch adjust
00h	Silence	Y	N
01h	square wave	Y	Y
02h	sine wave	Y	Y
03h	sawtooth wave	Y	Y
04h	triangle wave	Y	Y
05h	Beeping	Y	Y
06h	Alarm	Y	Y
07h	Warble	Y	Y
08h	Carousel	Y	Y
10h	1 short pip	N	Y
11h	2 short pips	N	Y
12h	3 short pips	N	Y
13h	4 short pips	N	Y
14h	5 short pips	N	Y
15h	6 short pips	N	Y
16h	7 short pips	N	Y
17h	8 short pips	N	Y
18h	9 short pips	N	Y
19h	10 short pips	N	Y
1Ah	11 short pips	N	Y
1Bh	12 short pips	N	Y
1Ch	13 short pips	N	Y
1Dh	14 short pips	N	Y
1Eh	15 short pips	N	Y
1Fh	16 short pips	N	Y
23h	DTMF #	Y	N
2Ch	DTMF *	Y	N
30h	DTMF 0	Y	N
31h	DTMF 1	Y	N

Value	Effect	Continuous	Pitch adjust
32h	DTMF 2	Y	N
33h	DTMF 3	Y	N
34h	DTMF 4	Y	N
35h	DTMF 5	Y	N
36h	DTMF 6	Y	N
37h	DTMF 7	Y	N
38h	DTMF 8	Y	N
39h	DTMF 9	Y	N
40h	harp	N	Y
41h	xylophone	N	Y
42h	tuba	N	Y
43h	glockenspiel	N	Y
44h	organ	N	Y
45h	trumpet	N	Y
46h	piano	N	Y
47h	chimes	N	Y
48h	music box	N	Y
49h	bell	N	Y
50h	click	N	N
51h	switch	N	N
52h	cowbell	N	N
53h	notch	N	N
54h	hihat	N	N
55h	kickdrum	N	N
56h	pop	N	N
57h	clack	N	N
58h	chack	N	N
60h	mute	N	N
61h	unmute	N	N

Copyright © 2015 Future Technology Devices International Limited

Table 4-16 MIDI Note Effect

MIDI note	ANSI note	Freq (Hz)
21	A0	27.5
22	A#0	29.1
23	B0	30.9
24	C1	32.7
25	C#1	34.6
26	D1	36.7
27	D#1	38.9
28	E1	41.2
29	F1	43.7
30	F#1	46.2
31	G1	49.0
32	G#1	51.9
33	A1	55.0
34	A#1	58.3
35	B1	61.7
36	C2	65.4
37	C#2	69.3
38	D2	73.4
39	D#2	77.8
40	E2	82.4
41	F2	87.3
42	F#2	92.5
43	G2	98.0
44	G#2	103.8
45	A2	110.0
46	A#2	116.5
47	B2	123.5
48	C3	130.8
49	C#3	138.6
50	D3	146.8
51	D#3	155.6
52	E3	164.8
53	F3	174.6
54	F#3	185.0
55	G3	196.0
56	G#3	207.7
57	A3	220.0
58	A#3	233.1
59	B3	246.9
60	C4	261.6
61	C#4	277.2
62	D4	293.7
63	D#4	311.1
64	E4	329.6
65	F4	349.2
66	F#4	370.0
67	G4	392.0
68	G#4	415.3
69	A4	440.0
70	A#4	466.2
71	B4	493.9
72	C5	523.3
73	C#5	554.4
74	D5	587.3
75	D#5	622.3
76	E5	659.3
77	F5	698.5
78	F#5	740.0
79	G5	784.0
80	G#5	830.6
81	A5	880.0
82	A#5	932.3
83	B5	987.8
84	C6	1046.5
85	C#6	1108.7
86	D6	1174.7
87	D#6	1244.5
88	E6	1318.5
89	F6	1396.9
90	F#6	1480.0
91	G6	1568.0
92	G#6	1661.2
93	A6	1760.0
94	A#6	1864.7
95	B6	1975.5
96	C7	2093.0
97	C#7	2217.5
98	D7	2349.3
99	D#7	2489.0
100	E7	2637.0
101	F7	2793.8
102	F#7	2960.0
103	G7	3136.0
104	G#7	3322.4
105	A7	3520.0
106	A#7	3729.3
107	B7	3951.1
108	C8	4186.0

Copyright © 2015 Future Technology Devices International Limited

4.6.2 Audio Playback

The FT81x can play back recorded sound through its audio output. To do this, load the original sound data into the FT81x's RAM, and set registers to start the playback.

The registers controlling audio playback are:

REG_PLAYBACK_START:	the start address of the audio data
REG_PLAYBACK_LENGTH:	the length of the audio data, in bytes
REG_PLAYBACK_FREQ:	the playback sampling frequency, in Hz
REG_PLAYBACK_FORMAT:	the playback format, one of LINEAR SAMPLES, uLAW SAMPLES, or ADPCM SAMPLES
REG_PLAYBACK_LOOP:	if zero, the sample is played once. If one, the sample is repeated indefinitely
REG_PLAYBACK_PLAY:	a write to this location triggers the start of audio playback, regardless of writing '0' or '1'. Read back '1' when playback is ongoing, and '0' when playback finishes
REG_VOL_PB:	playback volume, 0-255

The mono audio formats supported are 8-bits PCM, 8-bits uLAW and 4-bits IMA-ADPCM. For ADPCM_SAMPLES, each sample is 4 bits, so two samples are packed per byte, the first sample is in bits 0-3 and the second is in bits 4-7.

The current audio playback read pointer can be queried by reading the REG_PLAYBACK_READPTR. Using a large sample buffer, looping, and this read pointer, the host MPU/MCU can supply a continuous stream of audio.

4.7 Touch-Screen Engine

The FT81x touch-screen engine supports both resistive and capacitive touch panels. FT810 and FT812 support resistive touch, while FT811 and FT813 support capacitive touch.

4.7.1 Resistive Touch Control

The resistive touch-screen consists of a touch screen engine, ADC, Axis-switches, and ADC input multiplexer. The touch screen engine reads commands from the memory map register and generates the required control signals to the axis-switches and inputs mux and ADC. The ADC data are acquired, processed and updated in the respective register for the MPU/MCU to read.

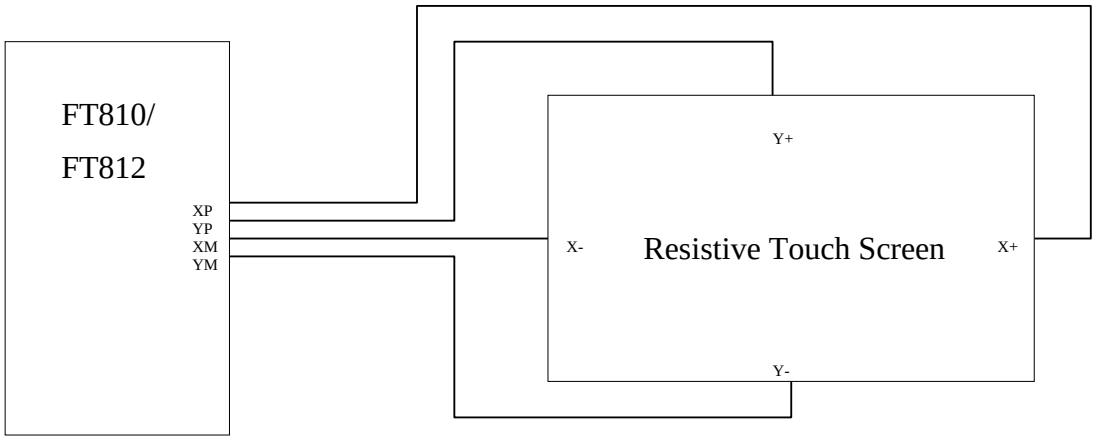

Figure 4-8 Resistive Touch screen connection

Copyright © 2015 Future Technology Devices International Limited

The host controls the TOUCH SCREEN ENGINE operation mode by writing the REG_TOUCH_MODE.

Table 4-17 Resistive Touch Controller Operating Mode

REG_TOUCH_MODE	Mode	Description
0	OFF	Acquisition stopped, only touch detection interrupt is still valid.
1	ONE-SHOT	Perform acquisition once every time the MPU writes '1' to REG_TOUCH_MODE.
2	FRAME-SYNC	Perform acquisition for every frame sync (~60 data acquisition/second.
3	CONTINUOUS	Perform acquisition continuously at approximately 1000 data acquisition / second.

The Touch Screen Engine captures the raw X and Y coordinate and writes to register REG_TOUCH_RAW XY. The range of these values is 0-1023. If the touch screen is not being pressed, both registers read 65535 (FFFFh).

These touch values are transformed into screen coordinates using the matrix in registers REG_TOUCH_TRANSFORM_A-F. The post-transform coordinates are available in register REG_TOUCH_SCREEN_XY. If the touch screen is not being pressed, both registers read -32768 (8000h). The values for REG TOUCH TRANSFORM A-F may be computed using an on-screen calibration process.

If the screen is being touched, the screen coordinates are looked up in the screen's tag buffer, delivering a final 8-bit tag value, in REG TOUCH TAG. Because the tag lookup takes a full frame, and touch coordinates change continuously, the original (x; y) used for the tag lookup is also available in REG_TOUCH_TAG_XY.

Screen touch pressure is available in REG_TOUCH_RZ. The value is relative to the resistance of the touch contact, a lower value indicates more pressure. The register defaults to 32767 when touch is not detected. The REG_TOUCH_THRESHOLD can be set to accept a touch only when the force threshold is exceeded.

4.7.2 Capacitive Touch Control

The Capacitive Touch Screen Engine (CTSE) of the FT81x communicates with the external capacitive touch panel module (CTPM) through an I^2C interface. The CTPM will assert its interrupt line when there is a touch detected. Upon detecting CTP_INT_N line active, the FT81x will read the touch data through I^2C. Up to 5 touches can be reported and stored in FT81x registers.

For a supported CTPM list please consult FTDI website.

Copyright © 2015 Future Technology Devices International Limited

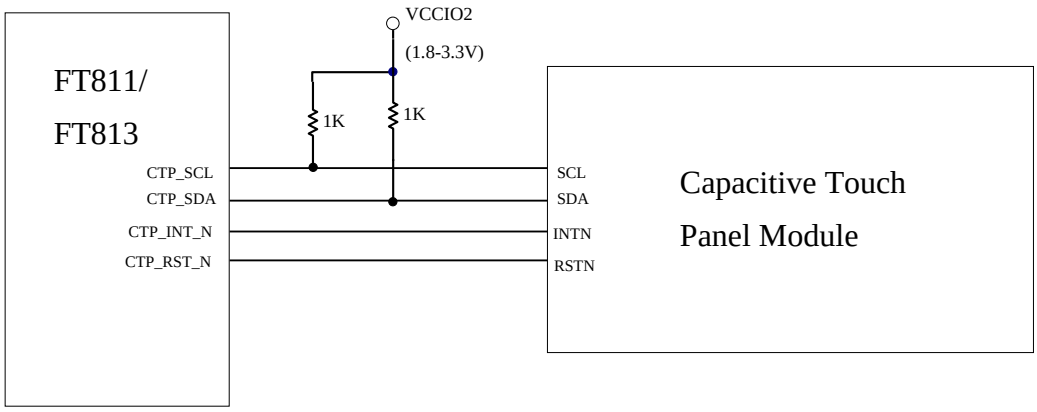

Figure 4-9 Touch screen connection

The host controls the CTSE operation mode by writing the REG_CTOUCH_MODE.

Table 4-18 Capacitive Touch Controller Operating Mode

REG_CTOUCH_MODE	Mode	Description
0	OFF	Acquisition stopped
1-2	Reserved	Reserved
3	CONTINUOUS	Perform acquisition continuously at the reporting rate of the connected CTPM.

The FT81x CTSE supports compatibility mode and extended mode. By default the CTSE runs in compatibility mode where the touch system provides an interface very similar to the resistive touch engine. In this mode the same application code can run on FT810/FT812 and FT811/FT813 without alteration. In extended mode, the touch register meanings are modified, and a second set of registers are exposed. These allow multi-touch detection (up to 5 touches).

4.7.3 Compatibility mode

The CTSE reads the X and Y coordinates from the CTPM and writes to register REG_CTOUCH_RAW_XY. If the touch screen is not being pressed, both registers read 65535 (FFFFh).

These touch values are transformed into screen coordinates using the matrix in registers REG_CTOUCH_TRANSFORM_A-F. The post-transform coordinates are available in register REG_CTOUCH_SCREEN_XY. If the touch screen is not being pressed, both registers read -32768 (8000h). The values for REG_CTOUCH_TRANSFORM_A-F may be computed using an on-screen calibration process.

If the screen is being touched, the screen coordinates are looked up in the screen's tag buffer, delivering a final 8-bit tag value, in REG_TOUCH_TAG. Because the tag lookup takes a full frame, and touch coordinates change continuously, the original (x; y) used for the tag lookup is also available in REG_TOUCH_TAG_XY.

4.7.4 Extended mode

Setting REG_CTOUCH_EXTENDED to 1b'0 enables extended mode. In extended mode a new set of readout registers are available, allowing gestures and up to five touches to be read. There are two classes of registers: control registers and status registers. Control registers are written by the MCU. Status registers can be read out by the MCU and the FT81x's hardware tag system.

Copyright © 2015 Future Technology Devices International Limited

The five touch coordinates are packed in REG_CTOUCH_TOUCH0_XY, REG_CTOUCH_TOUCH1_XY, REG_CTOUCH_TOUCH2_XY, REG_CTOUCH_TOUCH3_XY, REG_CTOUCH4_X and REG_CTOUCH4_Y.

Coordinates stored in these registers are signed 16-bit values, so have range -32768 to 32767. The no-touch condition is indicated by x=y= -32768. These coordinates are already transformed into screen coordinates based on the raw data read from the CTPM, using the matrix in registers REG_CTOUCH_TRANSFORM_A-F. To obtain raw (x,y) coordinates read from CTPM, the user sets the REG_CTOUCH_TRANSFORM_A-F registers to the identity matrix.

The FT81x tag mechanism is implemented by hardware, where up to 5 tags can be looked up.

4.7.5 Short-circuit protection

For resistive touch it is useful to protect the chip from permanent damage due to potential short-circuits on the 4 XY lines. When a short circuit on the touch screen happens, the FT81x can detect it and stop the touch detection operation, leaving the 4 XY pins in the high impedance state.

The short-circuit protection can be enabled/disabled by the REG_TOUCH_CONFIG.

4.7.6 Capacitive touch configuration

On capacitive touch system some users may need to adjust the CTPM default values, such as the registers affecting touch sensitivity. To do this the following sequence shall be executed once after chip reset:

- Hold the touch engine in reset (set REG_CPURESET = 2)
- Write the CTPM configure register address and value to FT81x designated memory location
- Up to 10 register address/value can be added
- Release the touch engine reset (set REG_CPURESET = 0)

The CTPM can be enabled in low power state when the touch function is not required by the application. Setting the low-power bit in REG_TOUCH_CONFIG will enable the low power mode of the CTPM. When the low-power bit is cleared, the FT81x touch engine will send a reset to the CTPM, thus re-enabling the touch detection function.

4.7.7 Touch detection in none-ACTIVE state

When FT81x is in none-ACTIVE state, a touch event can still be detected and reported to the host through the INT_N pin. In other words, a touch event can wake-up the host if needed.

For resistive touch, the INT_N pin will be asserted low when the screen is touched, regardless of the setting of the interrupt registers. This will happen when the FT81x is in STANDBY or SLEEP state, but not in POWERDOWN state.

For capacitive touch, the INT_N pin will follow CTP_INT_N pin when the FT81x is in STANDBY, SLEEP or POWERDOWN state.

4.8 Power Management

4.8.1 Power supply

The FT81x may be operated with a single supply of 3.3V applied to VCC and VCCIO pins. For operation with a host MPU/MCU at a lower supply, connect the VCCIO1 to the MPU IO supply to match the interface voltage. For operation with LCD/touch panels at lower voltages, connect the VCCIO2 to the LCD/touch IO supply.

Copyright © 2015 Future Technology Devices International Limited

Table 4-19 Power supply

Symbol	Typical	Description
VCCIO1	1.8V, or 2.5V, or 3.3V	Supply for Host interface digital I/O pins
VCCIO2	1.8V, or 2.5V, or 3.3V	Supply for RGB and touch interface I/O pins
VCC	3.3V	Supply for 3.3V circuits and internal regulator
VOUT1V2	1.2V	Supply for digital core. Generated by internal regulator

4.8.2 Internal Regulator and POR

The internal regulator provides power to the core circuit. A 47kΩ resistor is recommended to pull the PD_N pin up to VCCIO1, together with a 100nF capacitor to ground in order to delay the internal regulator powering up after the VCC and VCCIO are stable.

The internal regulator requires a compensation capacitor to be stable. A typical design requires a 4.7uF capacitor between the VOUT1V2 and GND pins. Do not connect any other load to the VOUT1V2 pin.

The internal regulator will generate a Power-On-Reset (POR) pulse when the output voltage rises above the POR threshold. The POR will reset all the core digital circuits.

It is possible to use PD_N pin as an asynchronous hardware reset input. Drive PD_N low for at least 5ms and then drive it high will reset the FT81x chip.

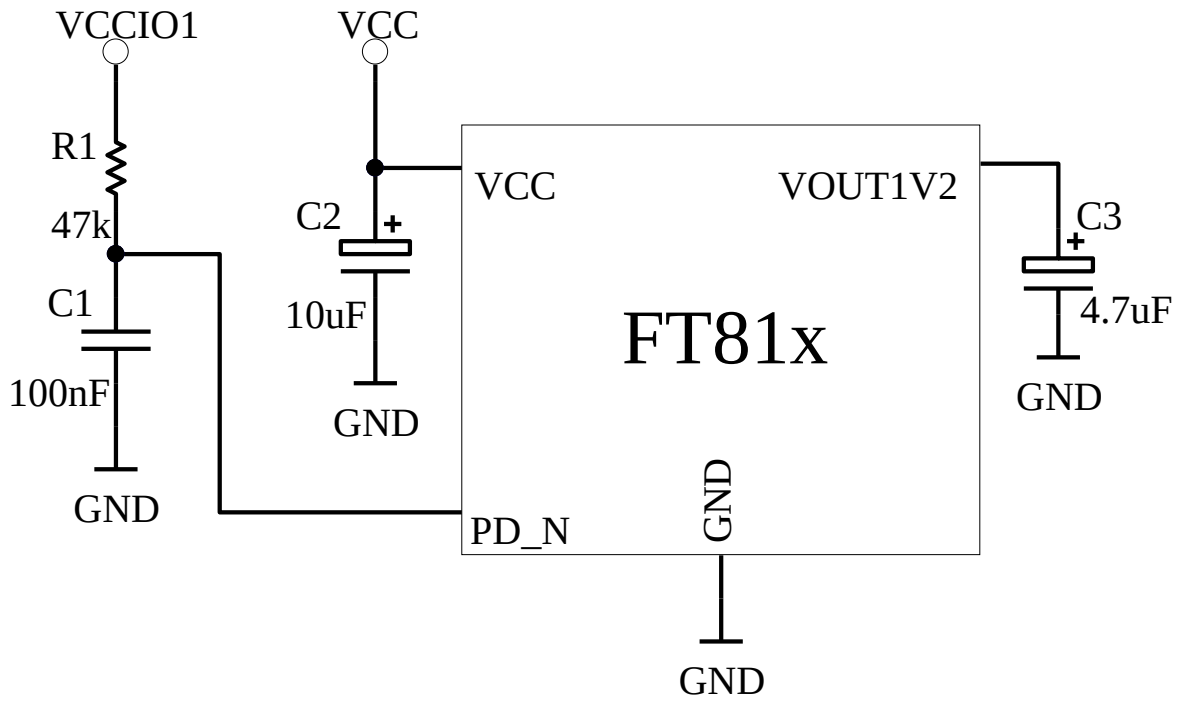

Figure 4-10 Internal regulator

Copyright © 2015 Future Technology Devices International Limited

4.8.3 Power Modes

When the supply to VCCIO and VCC is applied, the internal regulator is powered by VCC. An internal POR pulse will be generated during the regulator power up until it is stable. After the initial power up, the FT81x will stay in the SLEEP state. When needed, the host can set the FT81x to the ACTIVE state by performing a SPI ACTIVE command. The graphics engine, the audio engine and the touch engine are only functional in the ACTIVE state. To save power the host can send a command to put the FT81x into any of the low power modes: STANDBY, SLEEP and POWERDOWN. In addition, the host is allowed to put the FT81x in POWERDOWN mode by driving the PD_N pin to low, regardless of what state it is currently in. Refer to Figure 4-11 for the power state transitions.

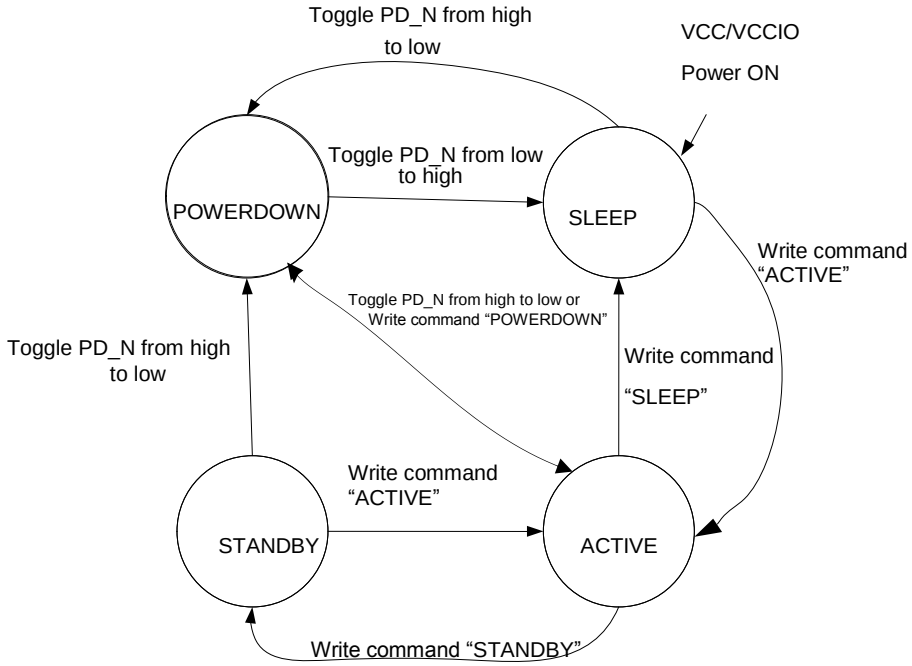

Figure 4-11 Power State Transition

4.8.3.1 ACTIVE state

In ACTIVE state, the FT81x is in normal operation. The clock oscillator and PLL are functioning. The system clock applied to the FT81x core engines is enabled.

4.8.3.2 STANDBY state

In STANDBY state, the clock oscillator and PLL remain functioning; the system clock applied to the FT81x core engines is disabled. All register contents are retained.

4.8.3.3 SLEEP state

In SLEEP state, the clock oscillator, PLL and system clock applied to the FT81x core engines are disabled. All register contents are retained.

4.8.3.4 POWERDOWN state

In POWERDOWN state, the clock oscillator, the PLL and the system clock applied to the FT81x core is disabled. The core engines are powered down while the SPI interface for host commands remains functional. All register contents are lost and reset to default when the chip is next switched on. The internal regulator remains on.

Copyright © 2015 Future Technology Devices International Limited

4.8.3.5 Wake up to ACTIVE from other power states

When in the POWER DOWN state, if the device enters this state via an SPI command, then only the SPI ACTIVE command will bring the device back to the ACTIVE state, provided PD_N pin is also high. However, if PD_N is used instead, then making PD_N high followed by a SPI ACTIVE command will wake up the device. Upon exiting this state, the device will perform a global reset, and will go through the same power up sequence. All settings from SPI commands will be reset except those that pertain to pin states during power down. The clock enable sequence mentioned in section 4.2.3 shall be executed to properly select and enable the system clock.

From the SLEEP state, the host MPU sends an SPI ACTIVE command to wake the FT81x into the ACTIVE state. The host needs to wait for at least 20ms before accessing any registers or commands. This is to guarantee the clock oscillator and PLL are up and stable.

From the STANDBY state, the host MPU sends SPI ACTIVE command to wake the FT81x into the ACTIVE state. The host can immediately access any register or command.

4.8.4 Reset and boot-up sequence

There are a few hardware and software reset events which can be triggered to reset the FT81x.

Hardware reset events:

- Power-on-Reset(POR)
- Toggle the PD_N pin

Software reset events:

- SPI command RST_PULSE
- SPI command to switch between the internal clock and the external clock
- SPI command to enter POWERDOWN then wakeup

After reset the FT81x will be in the SLEEP state. Upon receiving an SPI ACTIVE command, the internal oscillator and PLL will start up. Once the clock is stable, the chip will check and repair its internal RAM, running the configuration and release the clock to the system. The chip will exit the reset and boot-up state and enter into normal operations. The boot-up may take up to 300ms to complete.

4.8.5 Pin Status at Different Power States

The FT81x pin status depends on the power state of the chip. See the following table for more details. At the power transition from ACTIVE to STANDBY or ACTIVE to SLEEP, all pins retain their previous status. The software needs to set AUDIO_L, BACKLIGHT to a known state before issuing power transition commands.

The pin status in the power down state can be changed by SPI command PIN_PD_STATE.

Table 4-20 Pin Status

Pin Name	Default Drive	Reset	Normal	Power Down (Default)
AUDIO_L	20mA	Out, Float	Out	Pull Low
SCK	-	In	In	In
MISO	5mA	Out, Float (CS_N = 1)	IO	Out, Float
MOSI	5mA	In	IO	In
CS_N	-	In	In	In

Copyright © 2015 Future Technology Devices International Limited

Pin Name	Default Drive	Reset	Normal	Power Down (Default)
IO2 GPIO0	5mA 5mA	In In	IO IO	Float Float
IO3 GPIO1	5mA 5mA	In In	IO IO	Float Float
GPIO2	5mA	In	IO	Float
INT_N	5mA	OD, Float	OD / Out	Float
PD_N	-	In	In	In
GPIO3	5mA	In	IO	Float
X1/CLK	-	In	In	In
XP	-	IO, Float	IO	Float
YP	-	IO, Float	IO	Float
XM	-	IO, Float	IO	Float
YM	-	IO, Float	IO	Float
CTP_RST_N	5mA	Out	Out	Pull Low
CTP_INT_N	-	In (internal pull-up)	In (internal pull-up)	In (internal pull-up)
CTP_SCL	20mA	OD	IO	Float
CTP_SDA	20mA	OD	IO	Float
BACKLIGHT	5mA	Out	Out	Pull Low
DE	5mA	Out	Out	Pull Low
VSYNC	5mA	Out	Out	Pull Low
HSYNC	5mA	Out	Out	Pull Low
DISP	5mA	Out	Out	Pull Low
PCLK	5mA	Out	Out	Pull Low
R/G/B	5mA	Out	Out	Pull Low

Copyright © 2015 Future Technology Devices International Limited

5 Memory Map

All memory and registers in the FT81x core are memory mapped in 22-bit address space with a 2-bit SPI command prefix. Prefix 0'b00 for read and 0'b10 for write to the address space, 0'b01 is reserved for Host Commands and 0'b11 undefined. The following are the memory space definition.

Table 5-1 FT81x Memory Map

Start Address	End Address	Size	NAME	Description
00 0000h	0F FFFFh	1024 kB	RAM_G	General purpose graphics RAM
1E 0000h	2F FFFBh	1152 kB	ROM_FONT	Font table and bitmap
2F FFFCh	2F FFFFh	4 B	ROM_FONT_ADDR	Font table pointer address
30 0000h	30 1FFFh	8 kB	RAM_DL	Display List RAM
30 2000h	30 2FFFh	4 kB	RAM_REG	Registers
30 8000h	30 8FFFh	4 kB	RAM_CMD	Command buffer

Note 1: The addresses beyond this table are reserved and shall not be read or written unless otherwise specified.

5.1 Registers

Table 5-2 shows the complete list of the FT81x registers. Refer to FT81x_Series_Programmers_Guide, Chapter 2 for details of the register function.

Table 5-2 Overview of FT81x Registers

Address (hex)	Register Name	Bits	r/w	Reset value	Description
302000h	REG_ID	8	r/o	7Ch	Identification register, always reads as 7Ch
302004h	REG_FRAMES	32	r/o	0	Frame counter, since reset
302008h	REG_CLOCK	32	r/o	0	Clock cycles, since reset
30200Ch	REG_FREQUENCY	28	r/w	60000000	Main clock frequency (Hz)
302010h	REG_RENDERMODE	1	r/w	0	Rendering mode: 0 = normal, 1 = single-line
302014h	REG_SNAPY	11	r/w	0	Scanline select for RENDERMODE 1
302018h	REG_SNAPSHOT	1	r/w	-	Trigger for RENDERMODE 1
30201Ch	REG_SNAPFORMAT	6	r/w	20h	Pixel format for scanline readout
302020h	REG_CPURESET	3	r/w	2	Graphics, audio and touch engines reset control. Bit2: audio, bit1: touch, bit0: graphics
302024h	REG_TAP_CRC	32	r/o	-	Live video tap crc. Frame CRC is

Copyright © 2015 Future Technology Devices International Limited

Address (hex)	Register Name	Bits	r/w	Reset value	Description
					computed every DL SWAP.
302028h	REG_TAP_MASK	32	r/w	FFFFFFFFh	Live video tap mask
30202Ch	REG_HCYCLE	12	r/w	224h	Horizontal total cycle count
302030h	REG_HOFFSET	12	r/w	02Bh	Horizontal display start offset
302034h	REG_HSIZE	12	r/w	1E0h	Horizontal display pixel count
302038h	REG_HSYNC0	12	r/w	000h	Horizontal sync fall offset
30203Ch	REG_HSYNC1	12	r/w	029h	Horizontal sync rise offset
302040h	REG_VCYCLE	12	r/w	124h	Vertical total cycle count
302044h	REG_VOFFSET	12	r/w	00Ch	Vertical display start offset
302048h	REG_VSIZE	12	r/w	110h	Vertical display line count
30204Ch	REG_VSYNC0	10	r/w	000h	Vertical sync fall offset
302050h	REG_VSYNC1	10	r/w	00Ah	Vertical sync rise offset
302054h	REG_DLSWAP	2	r/w	0	Display list swap control
302058h	REG_ROTATE	3	r/w	0	Screen rotation control. Allow normal/mirrored/inverted for landscape or portrait orientation.
30205Ch	REG_OUTBITS	9	r/w	1B6h/000h	Output bit resolution, 3 bits each for R/G/B. Default is 6/6/6 bits for FT810/FT811, and 8/8/8 bits for FT812/FT813 (0b'000 means 8 bits)
302060h	REG_DITHER	1	r/w	1	Output dither enable
302064h	REG_SWIZZLE	4	r/w	0	Output RGB signal swizzle
302068h	REG_CSPREAD	1	r/w	1	Output clock spreading enable
30206Ch	REG_PCLK_POL	1	r/w	0	PCLK polarity: 0 = output on PCLK rising edge, 1 = output on PCLK falling edge
302070h	REG_PCLK	8	r/w	0	PCLK frequency divider, 0 = disable
302074h	REG_TAG_X	11	r/w	0	Tag query X coordinate
302078h	REG_TAG_Y	11	r/w	0	Tag query Y coordinate
30207Ch	REG_TAG	8	r/o	0	Tag query result
302080h	REG_VOL_PB	8	r/w	FFh	Volume for playback
302084h	REG_VOL_SOUND	8	r/w	FFh	Volume for synthesizer sound

Copyright © 2015 Future Technology Devices International Limited

Address (hex)	Register Name	Bits	r/w	Reset value	Description
302088h	REG_SOUND	16	r/w	0	Sound effect select
30208Ch	REG_PLAY	1	r/w	0h	Start effect playback
302090h	REG_GPIO_DIR	8	r/w	80h	Legacy GPIO pin direction, 0 = input , 1 = output
302094h	REG_GPIO	8	r/w	00h	Legacy GPIO read/write
302098h	REG_GPIOX_DIR	16	r/w	8000h	Extended GPIO pin direction, 0 = input , 1 = output
30209Ch	REG_GPIOX	16	r/w	0080h	Extended GPIO read/write
3020A0h - 3020A4h	Reserved	-	-	-	Reserved
3020A8h	REG_INT_FLAGS	8	r/o	00h	Interrupt flags, clear by read
3020Ach	REG_INT_EN	1	r/w	0	Global interrupt enable, 1=enable
3020B0h	REG_INT_MASK	8	r/w	FFh	Individual interrupt enable, 1=enable
3020B4h	REG_PLAYBACK_START	20	r/w	0	Audio playback RAM start address
3020B8h	REG_PLAYBACK_LENGTH	20	r/w	0	Audio playback sample length (bytes)
3020BCh	REG_PLAYBACK_READPTR	20	r/o	-	Audio playback current read pointer
3020C0h	REG_PLAYBACK_FREQ	16	r/w	8000	Audio playback sampling frequency (Hz)
3020C4h	REG_PLAYBACK_FORMAT	2	r/w	0	Audio playback format
3020C8h	REG_PLAYBACK_LOOP	1	r/w	0	Audio playback loop enable
3020CCh	REG_PLAYBACK_PLAY	1	r/w	0	Start audio playback
3020D0h	REG_PWM_HZ	14	r/w	250	BACKLIGHT PWM output frequency (Hz)
3020D4h	REG_PWM_DUTY	8	r/w	128	BACKLIGHT PWM output duty cycle 0=0%, 128=100%
3020D8h	REG_MACRO_0	32	r/w	0	Display list macro command 0
3020DCh	REG_MACRO_1	32	r/w	0	Display list macro command 1
3020E0h – 3020F4h	Reserved	-	-	-	Reserved
3020F8h	REG_CMD_READ	12	r/w	0	Command buffer read pointer

Copyright © 2015 Future Technology Devices International Limited

Address (hex)	Register Name	Bits	r/w	Reset value	Description
3020FCh	REG_CMD_WRITE	12	r/o	0	Command buffer write pointer
302100h	REG_CMD_DL	13	r/w	0	Command display list offset
302104h	REG_TOUCH_MODE	2	r/w	3	Touch-screen sampling mode
302108h	REG_TOUCH_ADC_MODE REG_CTOUCH_EXTENDED	1	r/w	1	Set Touch ADC mode Set capacitive touch operation mode: 0: extended mode (multi-touch) 1: FT800 compatibility mode (single touch).
30210Ch	REG_TOUCH_CHARGE	16	r/w	9000	Touch charge time, units of 6 clocks
302110h	REG_TOUCH_SETTLE	4	r/w	3	Touch settle time, units of 6 clocks
302114h	REG_TOUCH_OVERSAMPLE	4	r/w	7	Touch oversample factor
302118h	REG_TOUCH_RZTHRESH	16	r/w	FFFFh	Touch resistance threshold
30211Ch	REG_TOUCH_ RAW_XY REG_CTOUCH_TOUCH1_XY	32	r/o	-	Compatibility mode: touch-screen raw (x-MSB16; y-LSB16) Extended mode: touch-screen screen data for touch 1 (x-MSB16; y-LSB16)
302120h	REG_TOUCH_RZ REG_CTOUCH_TOUCH4_Y	16	r/o	-	Compatibility mode: touch-screen resistance Extended mode: touch-screen screen Y data for touch 4
302124h	REG_TOUCH_ SCREEN_XY REG_CTOUCH_TOUCH0_XY	32	r/o	-	Compatibility mode: touch-screen screen (x-MSB16; y-LSB16) Extended mode: touch-screen screen data for touch 0 (x-MSB16; y-LSB16)
302128h	REG_TOUCH_ TAG_XY	32	r/o	-	Touch-screen screen (x-MSB16; y-LSB16) used for tag 0 lookup
30212Ch	REG_TOUCH_TAG	8	r/o	-	Touch-screen tag result 0
302130h	REG_TOUCH_ TAG1_XY	32	r/o	-	Touch-screen screen (x-MSB16; y-LSB16) used for tag 1 lookup
302134h	REG_TOUCH_TAG1	8	r/o	-	Touch-screen tag result 1
302138h	REG_TOUCH_ TAG2_XY	32	r/o	-	Touch-screen screen (x-MSB16; y-LSB16) used for tag 2 lookup
30213Ch	REG_TOUCH_TAG2	8	r/o	-	Touch-screen tag result 2

Copyright © 2015 Future Technology Devices International Limited

Address (hex)	Register Name	Bits	r/w	Reset value	Description
302140h	REG_TOUCH_ TAG3_XY	32	r/o	-	Touch-screen screen (x-MSB16; y-LSB16) used for tag 3 lookup
302144h	REG_TOUCH_TAG3	8	r/o	-	Touch-screen tag result 3
302148h	REG_TOUCH_ TAG4_XY	32	r/o	-	Touch-screen screen (x-MSB16; y-LSB16) used for tag 4 lookup
30214Ch	REG_TOUCH_TAG4	8	r/o	-	Touch-screen tag result 4
302150h	REG_TOUCH_TRANSFORM_A	32	r/w	00010000h	Touch-screen transform coefficient (s15.16)
302154h	REG_TOUCH_TRANSFORM_B	32	r/w	00000000h	Touch-screen transform coefficient (s15.16)
302158h	REG_TOUCH_TRANSFORM_C	32	r/w	00000000h	Touch-screen transform coefficient (s15.16)
30215Ch	REG_TOUCH_TRANSFORM_D	32	r/w	00000000h	Touch-screen transform coefficient (s15.16)
302160h	REG_TOUCH_TRANSFORM_E	32	r/w	00010000h	Touch-screen transform coefficient (s15.16)
302164h	REG_TOUCH_TRANSFORM_F	32	r/w	00000000h	Touch-screen transform coefficient (s15.16)
302168h	REG_TOUCH_CONFIG	16	r/w	8381h(FT810/FT812) 0381h(FT811/FT813)	Touch configuration. RTP/CTP select RTP: short-circuit, sample clocks CTP: I2C address, CTPM type, low-power mode
30216Ch	REG_CTOUCH_TOUCH4_X	16	r/o	-	Extended mode: touch-screen screen X data for touch 4
302170h	Reserved	-	-	-	Reserved
302174h	REG_BIST_EN	1	r/w	0	BIST memory mapping enable

Copyright © 2015 Future Technology Devices International Limited

Address (hex)	Register Name	Bits	r/w	Reset value	Description
302178h	Reserved	-	-	-	Reserved
30217Ch	Reserved	-	-	-	Reserved
302180h	REG_TRIM	8	r/w	0	Internal relaxation clock trimming
302184h	REG_ANA_COMP	8	r/w	0	Analogue control register
302188h	REG_SPI_WIDTH	3	r/w	0	QSPI bus width setting Bit [2]: extra dummy cycle on read Bit [1:0]: bus width (0=1-bit, 1=2-bit, 2=4-bit)
30218Ch	REG_TOUCH_DIRECT_XY REG_CTOUCH_TOUCH2_XY	32	r/o	-	Compatibility mode: Touch screen direct (x-MSB16; y-LSB16) conversions Extended mode: touch-screen screen data for touch 2 (x-MSB16; y-LSB16)
302190h	REG_TOUCH_DIRECT_Z1Z2 REG_CTOUCH_TOUCH3_XY	32	r/o	-	Compatibility mode: Touch screen direct (z1-MSB16; z2-LSB16) conversions Extended mode: touch-screen screen data for touch 3 (x-MSB16; y-LSB16)
302194h - 302560h	Reserved	-	-	-	Reserved
302564h	REG_DATESTAMP	128	r/o	-	Stamp date code
302574h	REG_CMDB_SPACE	12	r/w	FFCh	Command DL (bulk) space available
302578h	REG_CMDB_WRITE	32	w/o	0	Command DL (bulk) write

Note: All register addresses are 4-byte aligned. The value in the "Bits" column refers to the number of valid bits from bit 0 unless otherwise specified; other bits are reserved.

5.2 Chip ID

The FT81x Chip ID can be read at memory location 0C0000h – 0C0003h. The reset values of these bytes are:

- 0C0000h: 08h
- 0C0001h: 10h (FT810), 11h(FT811), 12h(FT812), 13h(FT813)
- 0C0002h: 01h
- 0C0003h: 00h

Note that the Chip ID location can be over-written by software.

Copyright © 2015 Future Technology Devices International Limited

6 Devices Characteristics and Ratings

6.1 Absolute Maximum Ratings

The absolute maximum ratings for the FT81x device are as follows. These are in accordance with the Absolute Maximum Rating System (IEC 60134). Exceeding these may cause permanent damage to the device.

Table 6-1 Absolute Maximum Ratings

Parameter	Value	Unit
Storage Temperature	-65 to +150	°C
Floor Life (Out of Bag) At Factory Ambient (30°C / 60% Relative Humidity)	168 (IPC/JEDEC J-STD-033A MSL Level 3 Compliant)*	Hours
Ambient Temperature (Power Applied)	-40 to +85	°C
VCC Supply Voltage	0 to +4	V
VCCIO Supply Voltage	0 to +4	V
DC Input Voltage	-0.5 to + (VCCIO + 0.3)	V

* If the devices are stored out of the packaging, beyond this time limit, the devices should be baked before use. The devices should be ramped up to a temperature of +125°C and baked for up to 17 hours.

6.2 ESD and Latch-up Specifications

Table 6-2 ESD and Latch-Up Specifications

Description	**Specification**
Human Body Mode (HBM)	**> ± 2kV**
Machine mode (MM)	**> ± 200V**
Charged Device Mode (CDM)	**> ± 500V**
Latch-up	**> ± 200mA**

6.3 DC Characteristics

Table 6-3 Operating Voltage and Current

Parameter	Description	Minimum	Typical	Maximum	Units	Conditions
VCCIO1/ VCCIO2	VCCIO operating supply voltage	1.62	1.80	1.98	V	Normal Operation
		2.25	2.50	2.75	V	
		2.97	3.30	3.63	V	
VCC	VCC operating supply voltage	2.97	3.30	3.63	V	Normal Operation

Copyright © 2015 Future Technology Devices International Limited

Parameter	Description	Minimum	Typical	Maximum	Units	Conditions
Icc1	Power Down current	-	0.17	-	mA	Power down mode
Icc2	Sleep current	-	0.76	-	mA	Sleep Mode
Icc3	Standby current	-	1.8	-	mA	Standby Mode
Icc4	Operating current	-	22	-	mA	Normal Operation

Table 6-4 Digital I/O Pin Characteristics (VCCIO = +3.3V)

Parameter	Description	Minimum	Typical	Maximum	Units	Conditions
Voh	Output Voltage High	VCCIO-0.4	-	-	V	Ioh=5mA
Vol	Output Voltage Low	-	-	0.4	V	Iol=5mA
Vih	Input High Voltage	2.0	-	-	V	
Vil	Input Low Voltage	-	-	0.8	V	
Vth	Schmitt Hysteresis Voltage	0.22	-	0.3	V	
Iin	Input leakage current	-10	-	10	uA	Vin = VCCIO or 0
Ioz	Tri-state output leakage current	-10	-	10	uA	Vin = VCCIO or 0
Rpu	Pull-up resistor	-	42	-	kΩ	
Rpd	Pull-down resistor	-	44	-	kΩ	

Table 6-5 Digital I/O Pin Characteristics (VCCIO = +2.5V)

Parameter	Description	Minimum	Typical	Maximum	Units	Conditions
Voh	Output Voltage High	VCCIO-0.4	-	-	V	Ioh=5mA
Vol	Output Voltage Low	-	-	0.4	V	Iol=5mA
Vih	Input High Voltage	1.7	-	-	V	-
Vil	Input Low Voltage	-	-	0.7	V	-
Vth	Schmitt Hysteresis Voltage	0.2	-	0.3	V	-
Iin	Input leakage current	-10	-	10	uA	Vin = VCCIO or 0
Ioz	Tri-state output leakage current	-10	-	10	uA	Vin = VCCIO or 0
Rpu	Pull-up resistor	-	57	-	kΩ	

Copyright © 2015 Future Technology Devices International Limited

Rpd	Pull-down resistor	-	59	-	kΩ	

Table 6-6 Digital I/O Pin Characteristics (VCCIO = +1.8V)

Parameter	Description	Minimum	Typical	Maximum	Units	Conditions
Voh	Output Voltage High	VCCIO-0.4	-	-	V	Ioh=5mA
Vol	Output Voltage Low	-	-	0.4	V	Iol=5mA
Vih	Input High Voltage	1.2	-	-	V	-
Vil	Input Low Voltage	-	-	0.6	V	-
Vth	Schmitt Hysteresis Voltage	0.17	-	0.3	V	-
Iin	Input leakage current	-10	-	10	uA	Vin = VCCIO or 0
Ioz	Tri-state output leakage current	-10	-	10	uA	Vin = VCCIO or 0
Rpu	Pull-up resistor	-	90	-	kΩ	
Rpd	Pull-down resistor	-	97	-	kΩ	

Table 6-7 Touch Sense Characteristics

Parameter	Description	Minimum	Typical	Maximum	Units	Conditions
Rsw-on	X-,X+,Y- and Y+ Drive On resistance	-	6	10	Ω	VCCIO=3.3V
		-	9	16	Ω	VCCIO=1.8V
Rsw-off	X-,X+,Y- and Y+ Drive Off resistance	10	-	-	MΩ	
Rpu	Touch sense pull up resistance	78	100	125	kΩ	
Vth+	Touch Detection rising-edge threshold on XP pin	1.59	-	2.04	V	VCCIO=3.3V
		0.58	-	0.68	V	VCCIO=1.8V
Vth-	Touch Detection falling-edge threshold on XP pin	1.23	-	1.55	V	VCCIO=3.3V
		0.51	-	0.56	V	VCCIO=1.8V
Rl	X-axis and Y-axis drive load resistance	200	-	-	Ω	

Copyright © 2015 Future Technology Devices International Limited

6.4 AC Characteristics

6.4.1 System clock and reset

Table 6-8 System clock characteristics

Parameter	Value			Units
	Minimum	Typical	Maximum	
Internal Relaxation Clock				
Trimmed frequency	-	12	-	MHz
Frequency variation	-5.5	-	+5.5	%
Crystal				
Frequency	-	12.000	-	MHz
X1/X2 Capacitance	-	-	10	pF
External clock input				
Frequency	-	12.000	-	MHz
Duty cycle	45	50	55	%
Input voltage on X1/CLK	-	3.3	-	V
Reset				
Reset pulse on PD_N	5			ms

6.4.2 SPI interface timing

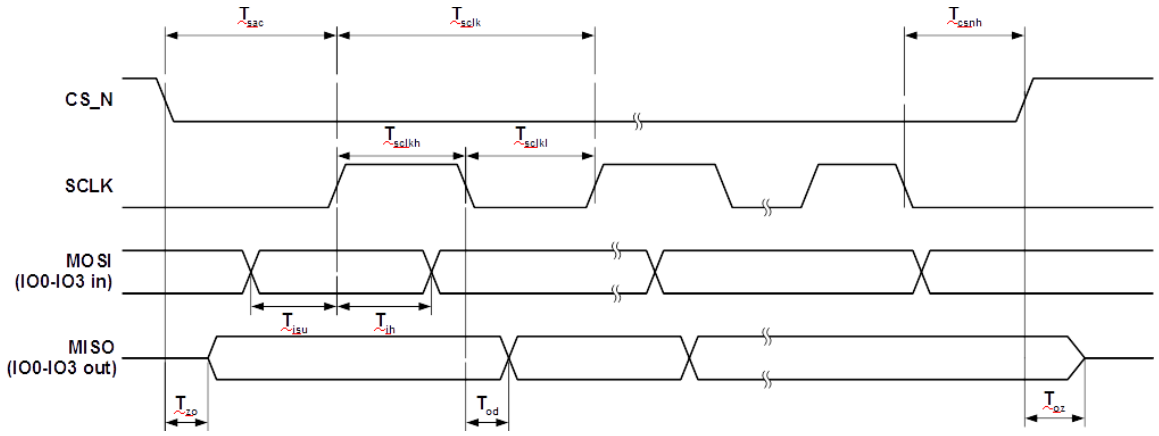

Figure 6-1 SPI Interface Timing

Copyright © 2015 Future Technology Devices International Limited

Table 6-9 SPI Interface Timing Specification

Parameter	Description	VCCIO=1.8V		VCCIO=2.5V		VCCIO=3.3V		Units
		Min	Max	Min	Max	Min	Max	
Tsclk	SPI clock period (SINGLE/DUAL mode)	33.3		33.3		33.3		ns
Tsclk	SPI clock period (QUAD mode)	40		40		40		ns
Tsclkl	SPI clock low duration	13		13		13		ns
Tsclkh	SPI clock high duration	13		13		13		ns
Tsac	SPI access time	4		3.5		3		ns
Tisu	Input Setup	4		3.5		3		ns
Tih	Input Hold	0		0		0		ns
Tzo	Output enable delay		16		13		11	ns
Toz	Output disable delay		13		11		10	ns
Tod	Output data delay		15		12		11	ns
Tcsnh	CSN hold time	0		0		0		ns

6.4.3 RGB Interface Timing

Table 6-10 RGB interface timing characteristics

Parameter	Description	Value			Units
		Min	Typ	Max	
Tpclk	Pixel Clock period	15.7			ns
Tpclkdc	Pixel Clock duty cycle	40	50	60	%
Td	Output delay relative to PCLK rising edge (REG_PCLK_POL=0) or falling edge (REG_PCLK_POL=1). Applied for all the RGB output pins.			4	ns
Th	Output hold time relative to PCLK rising edge (REG_PCLK_POL=0) or falling edge (REG_PCLK_POL=1). Applied for all the RGB output pins.	0.5			ns

Copyright © 2015 Future Technology Devices International Limited

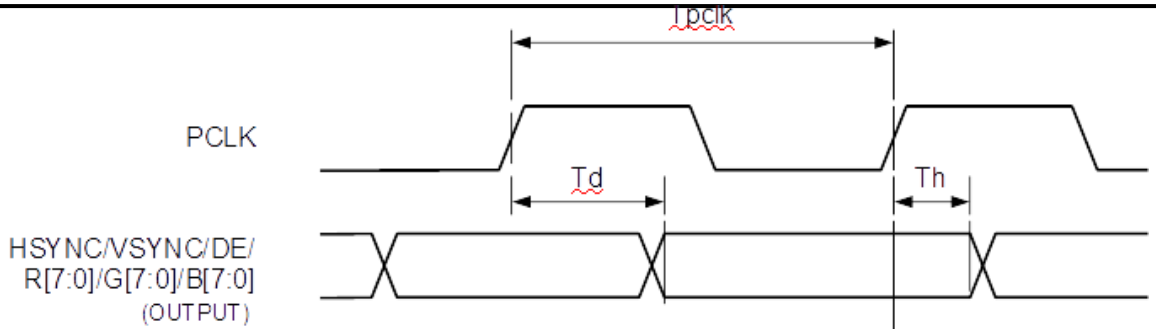

Figure 6-2 RGB Interface Timing

Copyright © 2015 Future Technology Devices International Limited

7 Application Examples

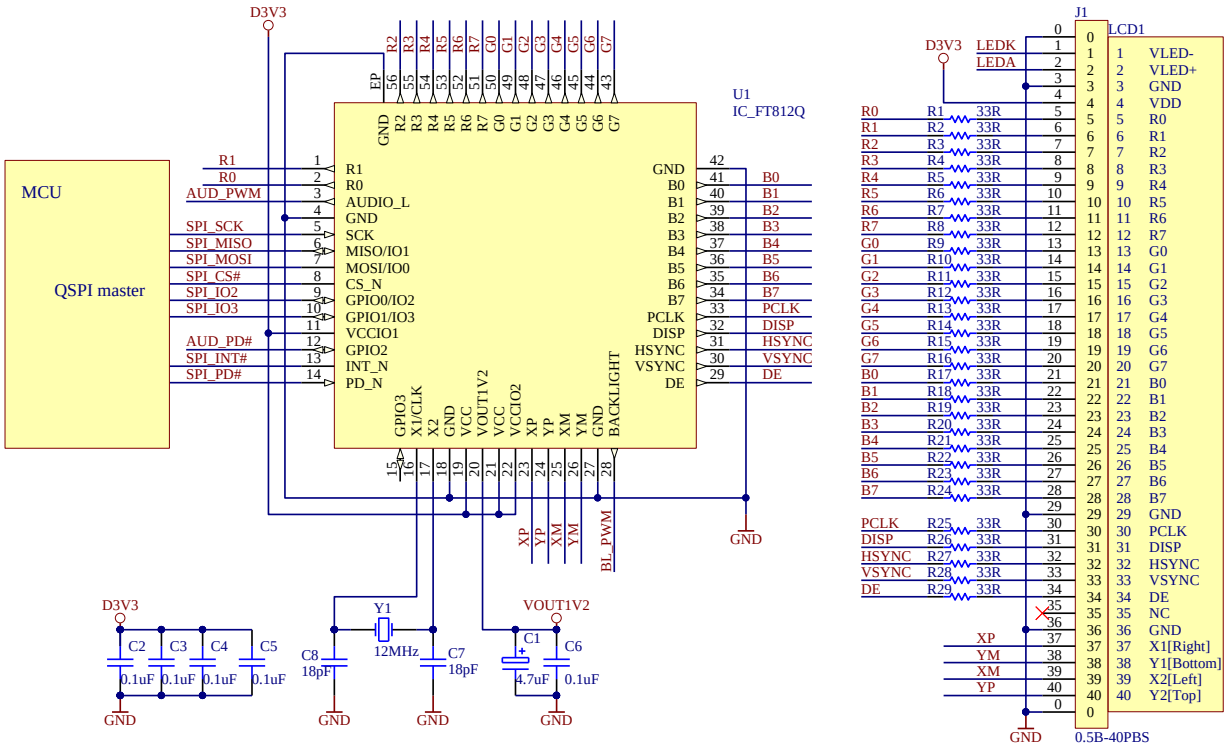

Figure 7-1 FT812 application circuit

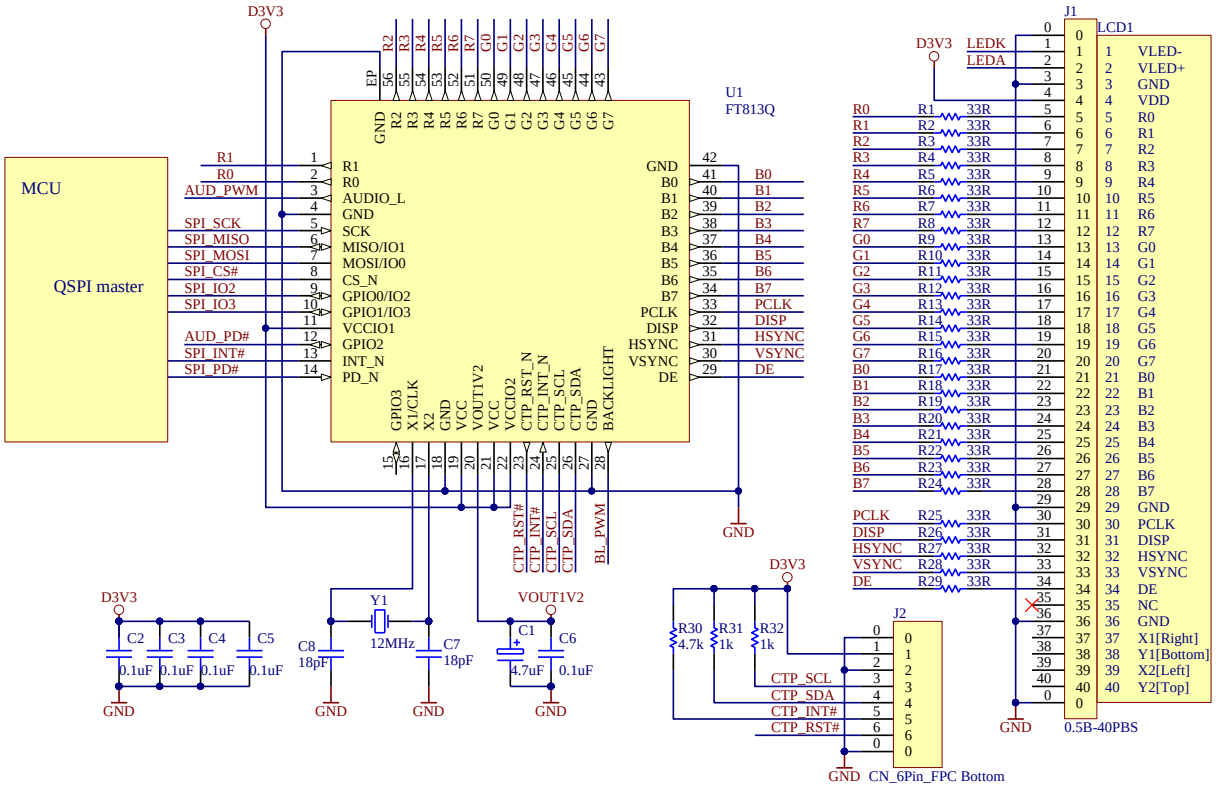

Figure 7-2 FT813 application circuit

Copyright © 2015 Future Technology Devices International Limited

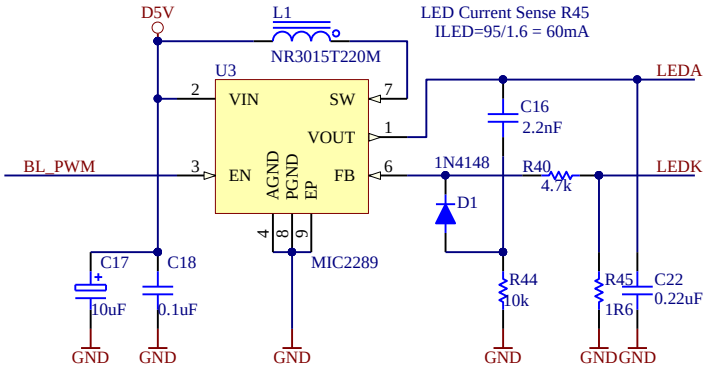

Figure 7-3 Backlight drive circuit

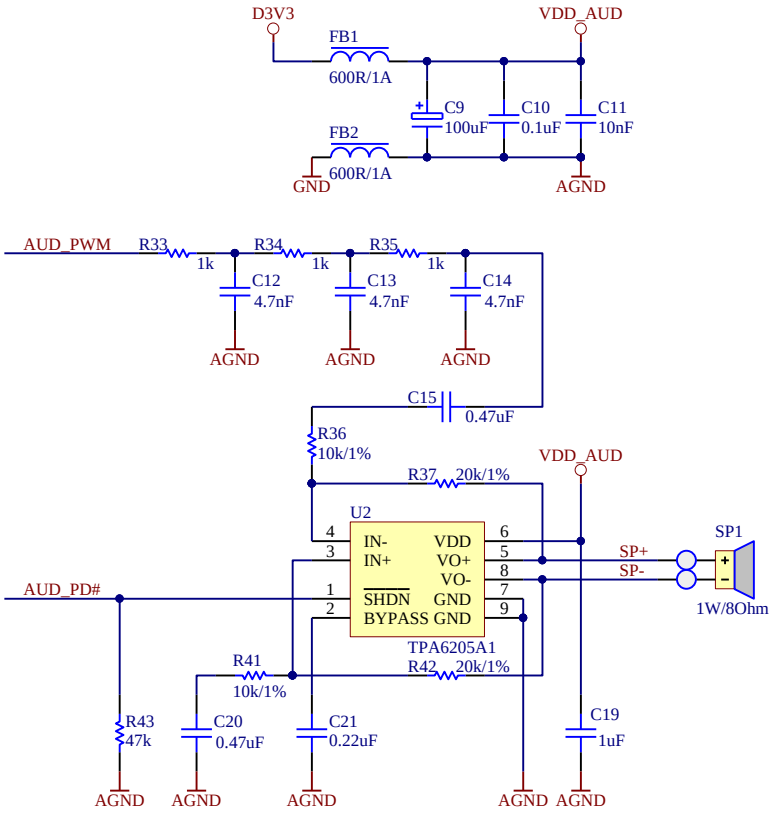

Figure 7-4 Audio filter and amplifier circuit

Copyright © 2015 Future Technology Devices International Limited

8 Package Parameters

The FT81x is available in VQFN-48 and VQFN-56 packages. The package dimensions, markings and solder reflow profile for all packages are described in following sections.

8.1 VQFN-48 Package Dimensions

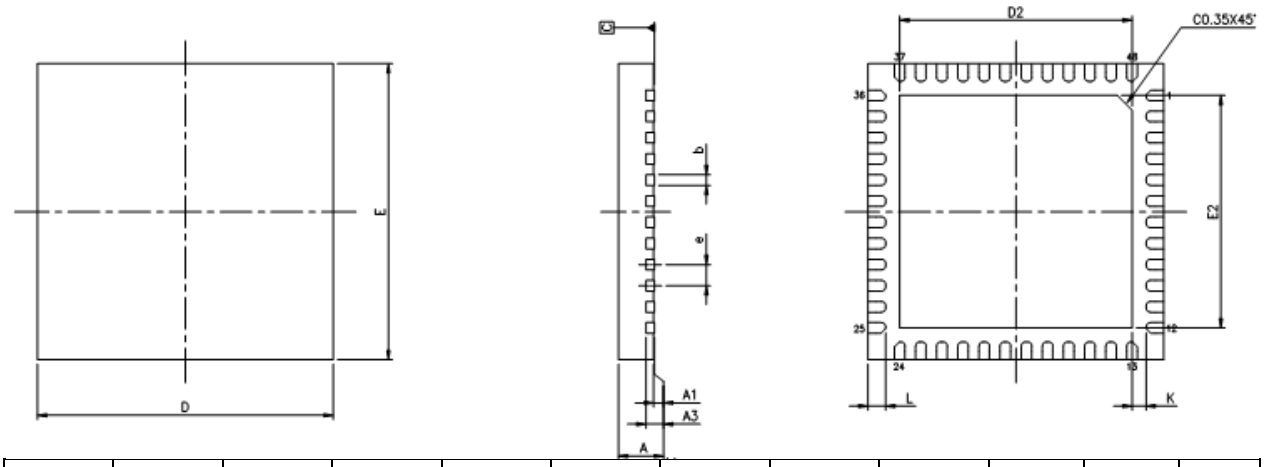

	A	A1	A3	b	D	E	D2	E2	e	L	K
MIN.	0.80	0.00		0.20			5.15	5.15		0.35	0.20
NOM.	0.85	0.02	0.20	0.25	7.00	7.00	5.20	5.20	0.50	0.40	
MAX.	0.90	0.05		0.30			5.25	5.25		0.45	

All dimensions are in millimetres (mm)

Figure 8-1 VQFN-48 Package Dimensions

8.2 VQFN-56 Package Dimensions

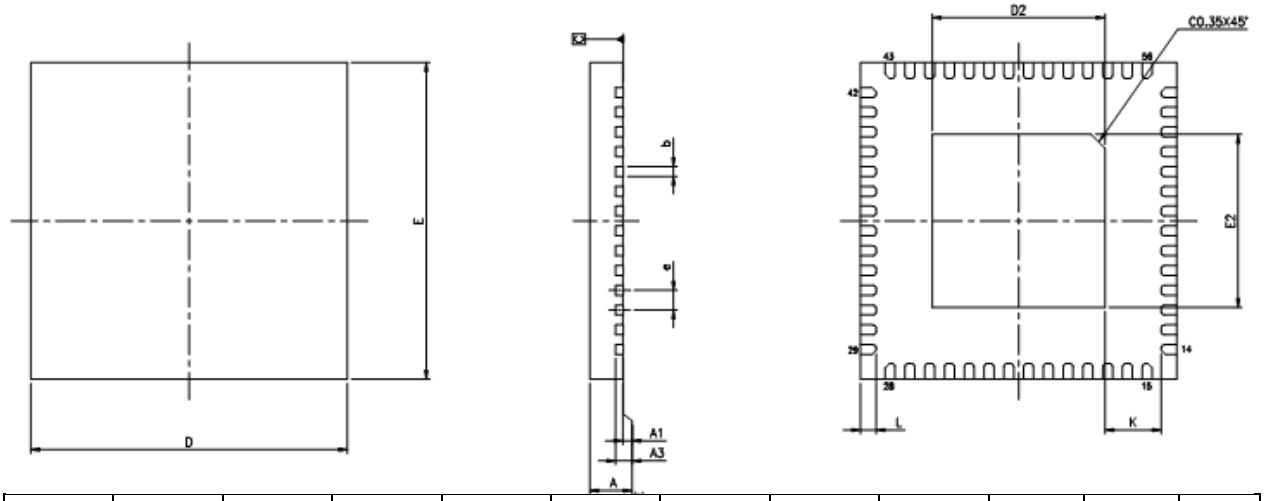

	A	A1	A3	b	D	E	D2	E2	e	L	K
MIN.	0.80	0.00		0.20			5.85	5.85		0.30	0.20
NOM.	0.85	0.02	0.20	0.25	8.00	8.00	5.90	5.90	0.50	0.40	
MAX.	0.90	0.05		0.30			5.95	5.95		0.50	

All dimensions are in millimetres (mm)

Figure 8-2 VQFN-56 Package Dimensions

Copyright © 2015 Future Technology Devices International Limited

8.3 Solder Reflow Profile

The FT81x is supplied in a Pb free VQFN-48 or VQFN-56 package. The recommended solder reflow profile for the package is shown in Figure 8-3.

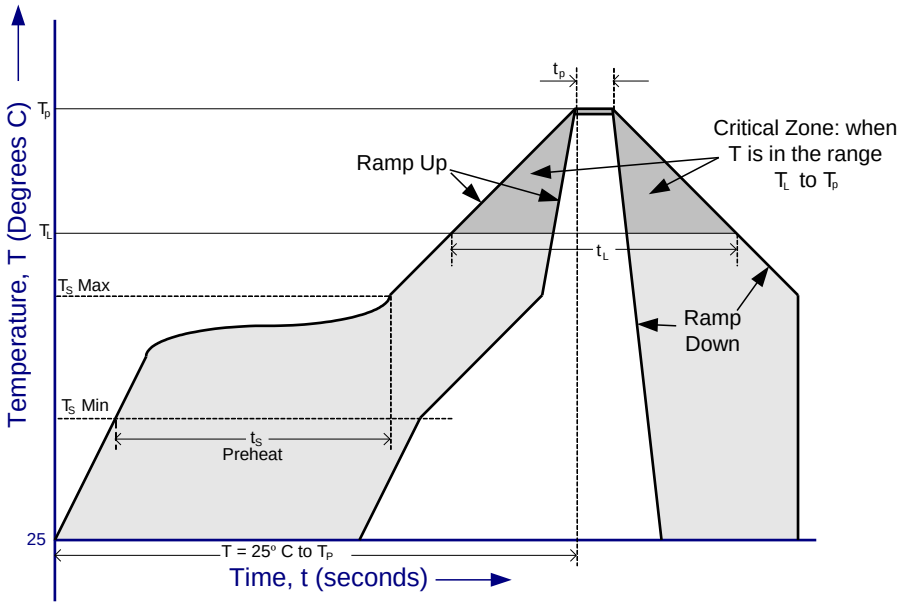

Figure 8-3 FT81x Solder Reflow Profile

The recommended values for the solder reflow profile are detailed in Table 8-1. Values are shown for both a completely Pb free solder process (i.e. the FT81x is used with Pb free solder), and for a non-Pb free solder process (i.e. the FT81x is used with non-Pb free solder).

Table 8-1 Reflow Profile Parameter Values

Profile Feature	Pb Free Solder Process	Non-Pb Free Solder Process
Average Ramp Up Rate (T_s to T_p)	3°C / second Max.	3°C / Second Max.
Preheat - Temperature Min (T_s Min.) - Temperature Max (T_s Max.) - Time (t_s Min to t_s Max)	 150°C 200°C 60 to 120 seconds	 100°C 150°C 60 to 120 seconds
Time Maintained Above Critical Temperature T_L: - Temperature (T_L) - Time (t_L)	 217°C 60 to 150 seconds	 183°C 60 to 150 seconds
Peak Temperature (T_p)	260°C	240°C
Time within 5°C of actual Peak Temperature (t_p)	20 to 40 seconds	20 to 40 seconds
Ramp Down Rate	6°C / second Max.	6°C / second Max.
Time for T= 25°C to Peak Temperature, T_p	8 minutes Max.	6 minutes Max.

Copyright © 2015 Future Technology Devices International Limited

9 Contact Information

Head Office – Glasgow, UK

Unit 1, 2 Seaward Place, Centurion Business Park
Glasgow G41 1HH
United Kingdom
Tel: +44 (0) 141 429 2777
Fax: +44 (0) 141 429 2758

E-mail (Sales) sales1@ftdichip.com
E-mail (Support) support1@ftdichip.com
E-mail (General Enquiries) admin1@ftdichip.com

Branch Office – Taipei, Taiwan

2F, No. 516, Sec. 1, NeiHu Road
Taipei 114
Taiwan, R.O.C.
Tel: +886 (0) 2 8797 1330
Fax: +886 (0) 2 8751 9737

E-mail (Sales) tw.sales1@ftdichip.com
E-mail (Support) tw.support1@ftdichip.com
E-mail (General Enquiries) tw.admin1@ftdichip.com

Branch Office – Tigard, Oregon, USA

7130 SW Fir Loop
Tigard, OR 97223
USA
Tel: +1 (503) 547 0988
Fax: +1 (503) 547 0987

E-Mail (Sales) us.sales@ftdichip.com
E-Mail (Support) us.support@ftdichip.com
E-Mail (General Enquiries) us.admin@ftdichip.com

Branch Office – Shanghai, China

Room 1103, No. 666 West Huaihai Road,
Changning District
Shanghai, 200052
China
Tel: +86 21 62351596
Fax: +86 21 62351595

E-mail (Sales) cn.sales@ftdichip.com
E-mail (Support) cn.support@ftdichip.com
E-mail (General Enquiries) cn.admin@ftdichip.com

Web Site

http://www.ftdichip.com

Distributor and Sales Representatives

Please visit the Sales Network page of the FTDI Web site for the contact details of our distributor(s) and sales representative(s) in your country.

System and equipment manufacturers and designers are responsible to ensure that their systems, and any Future Technology Devices International Ltd (FTDI) devices incorporated in their systems, meet all applicable safety, regulatory and system-level performance requirements. All application-related information in this document (including application descriptions, suggested FTDI devices and other materials) is provided for reference only. While FTDI has taken care to assure it is accurate, this information is subject to customer confirmation, and FTDI disclaims all liability for system designs and for any applications assistance provided by FTDI. Use of FTDI devices in life support and/or safety applications is entirely at the user's risk, and the user agrees to defend, indemnify and hold harmless FTDI from any and all damages, claims, suits or expense resulting from such use. This document is subject to change without notice. No freedom to use patents or other intellectual property rights is implied by the publication of this document. Neither the whole nor any part of the information contained in, or the product described in this document, may be adapted or reproduced in any material or electronic form without the prior written consent of the copyright holder. Future Technology Devices International Ltd, Unit 1, 2 Seaward Place, Centurion Business Park, Glasgow G41 1HH, United Kingdom. Scotland Registered Company Number: SC136640

Appendix A – References

Useful Application Notes

FT81x_Series_Programmer_Guide

AN_252 FT800 Audio Primer

AN_254 FT800 Designs with Visual TFT

AN_259 FT800 Example with 8-bit MCU

AN_275 FT800 Example with Arduino

AN_276 Audio File Conversion

AN_277 FT800 Create User Defined Font

AN_291 FT800 Create Multi-Language Font

AN_299 FT800 FT801 Internal Clock Trimming

AN_303 - FT800 Image File Conversion

AN_308 FT800 Example with an 8-bit MCU

AN_312 FT800 Example with ARM

AN_314 FT800 Advanced Techniques - Working with Bitmaps

AN_318 Arduino Library for FT800 Series

AN_320 FT800 Example with PIC

AN_327 EVE Screen Editor Installation Guide

AN_281 FT800 Emulator Library User Guide

AN_333 FT800 and FT801 Touch Capabilities

AN_336 FT800 - Selecting an LCD Display

FT800 Series Sample Application

EVE Frequently Asked Questions

Copyright © 2015 Future Technology Devices International Limited

Appendix B - List of Figures and Tables

List of Figures

Figure 2-1 FT81x Block Diagram 4
Figure 2-2 FT81x System Design Diagram 4
Figure 4-1 SPI master and slave in the master read case 14
Figure 4-2 Single/Dual SPI Interface connection 14
Figure 4-3 Quad SPI Interface connection 15
Figure 4-4 Internal relaxation oscillator connection 21
Figure 4-5 Crystal oscillator connection 21
Figure 4-6 External clock input 21
Figure 4-7 RGB timing waveforms 28
Figure 4-8 Resistive Touch screen connection 32
Figure 4-9 Touch screen connection 34
Figure 4-10 Internal regulator 36
Figure 4-11 Power State Transition 37
Figure 6-1 SPI Interface Timing 49
Figure 6-2 RGB Interface Timing 51
Figure 7-1 FT812 application circuit 52
Figure 7-2 FT813 application circuit 52
Figure 7-3 Backlight drive circuit 53
Figure 7-4 Audio filter and amplifier circuit 53
Figure 8-1 VQFN-48 Package Dimensions 54
Figure 8-2 VQFN-56 Package Dimensions 54
Figure 8-3 FT81x Solder Reflow Profile 55

List of Tables

Table 3-1 FT81x pin description 9
Table 4-1 QSPI channel selection 13
Table 4-2 Host memory read transaction 15
Table 4-3 Host memory write transaction 16
Table 4-4 Host command transaction 16
Table 4-5 Host command list 16
Table 4-6 Interrupt Flags bit assignment 20
Table 4-7 Font table format 23
Table 4-8 ROM font table 23
Table 4-9 ROM font ASCII character width in pixels 23
Table 4-10 ROM font Extended ASCII characters 25
Table 4-11 RGB PCLK frequency 26
Table 4-12 REG_SWIZZLE RGB Pins Mapping 27
Table 4-13 Registers for RGB horizontal and vertical timings 27
Table 4-14 Output drive current selection 29

Copyright © 2015 Future Technology Devices International Limited

Table 4-15 Sound Effect 30
Table 4-16 MIDI Note Effect 31
Table 4-17 Resistive Touch Controller Operating Mode 33
Table 4-18 Capacitive Touch Controller Operating Mode 34
Table 4-19 Power supply 36
Table 4-20 Pin Status 38
Table 5-1 FT81x Memory Map 40
Table 5-2 Overview of FT81x Registers 40
Table 6-1 Absolute Maximum Ratings 46
Table 6-2 ESD and Latch-Up Specifications 46
Table 6-3 Operating Voltage and Current 46
Table 6-4 Digital I/O Pin Characteristics (VCCIO = +3.3V) 47
Table 6-5 Digital I/O Pin Characteristics (VCCIO = +2.5V) 47
Table 6-6 Digital I/O Pin Characteristics (VCCIO = +1.8V) 48
Table 6-7 Touch Sense Characteristics 48
Table 6-8 System clock characteristics 49
Table 6-9 SPI Interface Timing Specification 50
Table 6-10 RGB interface timing characteristics 50
Table 8-1 Reflow Profile Parameter Values 55

Copyright © 2015 Future Technology Devices International Limited

Appendix C - Revision History

Document Title: FT81X Embedded Video Engine Datasheet
Document Reference No.: FT_001165
Clearance No.: FTDI#440
Product Page: http://www.ftdichip.com/EVE.htm
Document Feedback: DS_FT81x

Revision	Changes	Date
Draft	Initial Release	2015-02-15
1.0	Revised Release	2015-07-07
1.1	Revised Release	2015-09-14
1.2	Revised Release	2015-09-29

Copyright © 2015 Future Technology Devices International Limited