FSP3126

■ FEATURES

- 2A Output Current
- Up to 95% Efficiency
- 4.75V to 20V Input Range
- 8μA Shutdown Supply Current
- 410kHz Switching Frequency
- Adjustable Output Voltage
- Cycle-by-Cycle Current Limit Protection
- Thermal Shutdown Protection
- Frequency Foldback at Short Circuit
- Stability with Wide Range of Capacitors, Including Low ESR Ceramic Capacitors
- SOP8L Package

■ GENERAL DESCRIPTION

The FSP3126 is a current-mode step-down DC/DC converter that generates up to 2A of output current at 410kHz switching frequency. The device utilizes ISOBCD20 process for operation with input voltages up to 20V.

Consuming only 8μA in shutdown mode, the FSP3126 is highly efficient with peak operating efficiency at 95%. Protection features include cycle-by-cycle current limit, thermal shutdown, and frequency foldback at short circuit.

The FSP3126 is available in a SOP8L package and requires very few external devices for operation.

■ Typical Application

- TFT LCD Monitors
- Portable DVDs
- Car-Powered or Battery-Powered Equipments
- Set-Top Boxes
- Telecom Power Supplies
- DSL and Cable Modems and Routers
- Termination Supplies

■ PIN ASSIGNMENT

(Top View)

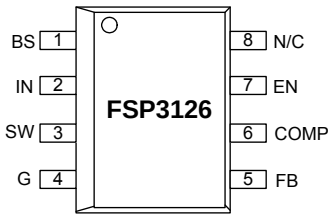

■ PIN DESCRIPTION

Name	No.	Description
BS	1	Bootstrap. This pin acts as the positive rail for the high-side switch's gate driver. Connect a 10nF capacitor between BS and SW.
IN	2	Input Supply. Bypass this pin to G with a low ESR capacitor. See Input Capacitor in the Application Information section.
SW	3	Switch Output. Connect this pin to the switching end of the inductor.
G	4	Ground.
FB	5	Feedback Input. The voltage at this pin is regulated to 1.293V. Connect to the resistor divider between output and ground to set output voltage.
COMP	6	Compensation Pin. See Stability Compensation in the Application Information section.
EN	7	Enable Input. When higher than 1.3V, this pin turns the IC on. When lower than 0.7V, this pin turns the IC off. Output voltage is discharged when the IC is off. When left unconnected, EN is pulled up to 4.5V tip with a 2μA pull up current.
N/C	8	Not Connected.

■ ABSOLUTE MAXIMUM RATINGS

Parameter	Value	Unit
IN Supply Voltage	-0.3 to 25	V
SW Voltage	-1 to V_{IN} + 1	V
BS Voltage	V_{SW} – 0.3 to V_{SW} + 8	V
EN, FB, COMP Voltage	-0.3 to 6	V
Continuous SW Current	Internally limited	A
Junction to Ambient Thermal Resistance (θ_{JA})	105	°C/W
Maximum Power Dissipation	0.76	W
Operating Junction Temperature	-40 to 150	°C
Storage Temperature	-55 to 150	°C
Lead Temperature (Soldering, 10 sec)	300	°C

(Note: Exceeding these limits may damage the device. Exposure to absolute maximum rating conditions for long periods may affect device reliability.)

■ ELECTRICAL CHARACTERISTICS

(V_{IN} = 12V, TA= 25°C unless otherwise specified.)

Parameter	Symbol	Test Conditions	Min.	Typ.	Max.	Unit
Input Voltage	V_{IN}	V_{OUT} = 5V, I_{LOAD} = 0A to 1A	7		20	V
Feedback Voltage	V_{FB}	4.75V ≤ V_{IN} ≤ 20V, V_{COMP} = 1.5V	1.267	1.293	1.319	V
High-Side Switch On Resistance	R_{ONH}			0.20		Ω
Low-Side Switch On Resistance	R_{ONL}			4.7		Ω
SW Leakage		V_{EN} = 0		0	10	μA
Current Limit	I_{LIMT}		2.4	2.85		A
COMP to Current Limit Transconductance	G_{COMP}			1.8		A/V
Error Amplifier Transconductance	G_{EA}	ΔI_{COMP} = ±10μA		550		μA/V
Error Amplifier DC Gain	A_{VEA}			4000		V/V
Switching Frequency	f_{SW}		350	410	470	kHz
Short Circuit Switching Frequency		V_{FB} = 0		50		kHz
Maximum Duty Cycle	D_{MAX}	V_{FB} = 1.1V		90		%
Minimum Duty Cycle		V_{FB} = 1.4V			0	%
Enable Threshold Voltage		Hysteresis = 0.1V	0.7	1	1.3	V
Enable Pull Up Current		Pin pulled up to 4.5V typically when left unconnected		2		μA
Supply Current in Shutdown		V_{EN} = 0		8	20	μA
IC Supply Current in Operation		V_{EN} = 3V, V_{FB} = 1.4V		0.7		mA
Thermal Shutdown Temperature		Hysteresis = 10°C		160		°C

■ FUNCTIONAL BLOCK DIAGRAM

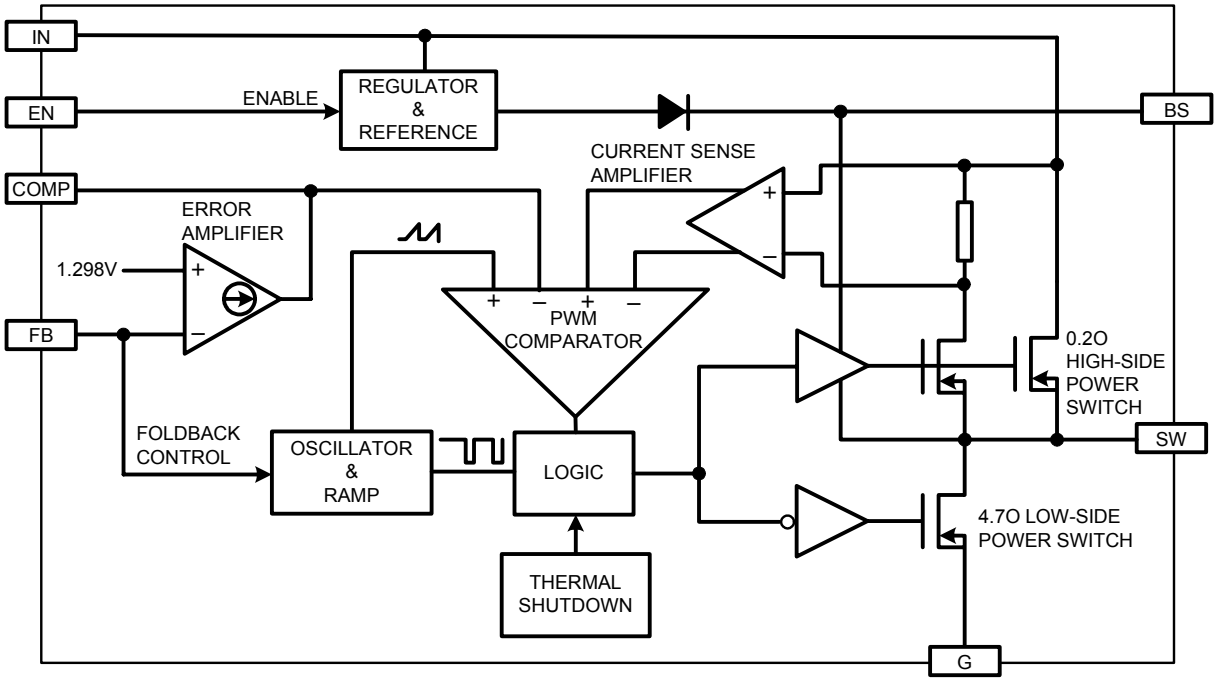

■ FUNCTIONAL DESCRIPTION

As seen in the above Figure, Functional Block Diagram, the FSP3126 is a current mode pulse width modulation (PWM) converter. The converter operates as follows:

A switching cycle starts when the rising edge of the Oscillator clock output causes the High-Side Power Switch to turn on and the Low-Side Power Switch to turn off. With the SW side of the inductor now connected to IN, the inductor current ramps up to store energy in the magnetic field. The inductor current level is measured by the Current Sense Amplifier and added to the Oscillator ramp signal. If the resulting summation is higher than the COMP voltage, the output of the PWM Comparator goes high. When this happens or when Oscillator clock output goes low, the High-Side Power Switch turns off and the Low-Side Power Switch turns on. At this point, the SW side of the inductor swings to a diode voltage below ground, causing the inductor current to decrease and magnetic energy to be transferred to output. This state continues until the cycle starts again.

The High-Side Power Switch is driven by logic using BS as the positive rail. This pin is charged to V_{SW} + 6V when the Low-Side Power Switch turns on.

The COMP voltage is the integration of the error between FB input and the internal 1.293V reference. If FB is lower than the reference voltage, COMP tends to go higher to increase current to the output. Current limit happens when COMP reaches its maximum clamp value of 2.55V.

The Oscillator normally switches at 410kHz. However, if FB voltage is less than 0.7V, then the switching frequency decreases until it reaches a minimum of 50kHz at V_{FB} = 0.5V.

Shutdown control

The FSP3126 has an enable input EN for turning the IC on or off. When EN is less than 0.7V, the IC is in 8μA low current shutdown mode and output is discharged through the Low-Side Power Switch. When EN is higher than 1.3V, the IC is in normal operation mode. EN is internally pulled up with a 2μA current source and can be left unconnected for always-on operation. Note that EN is a low voltage input with a maximum voltage of 6V; it should never be directly connected to IN.

Thermal Shutdown

The FSP3126 automatically turns off when its junction temperature exceeds 160°C.

■ APPLICATION INFORMATION

Output Voltage Setting

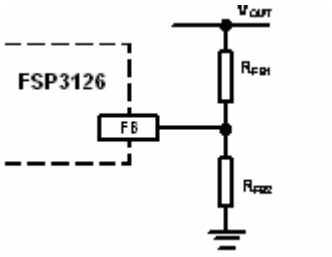

Figure1. Output Voltage Setting

Figure 1 shows the connections for setting the output voltage. Select the proper ratio of the two feedback resistors RFB1 and RFB2 based on the output voltage. Typically, use RFB2 ≈ 10kΩ and determine RFB1 from the following equation:

$$R_{FB1} = R_{FB2}\left(\frac{V_{OUT}}{1.293V} - 1\right) \quad (1)$$

Inductor Selection

The inductor maintains a continuous current to the output load. This inductor current has a ripple that is dependent on the inductance value: higher inductance reduces the peak-to-peak ripple current. The trade off for high inductance value is the increase in inductor core size and series resistance, and the reduction in current handling capability. In general, select an inductance value L based on the ripple current requirement:

$$L = \frac{V_{OUT} \bullet (V_{IN} - V_{OUT})}{V_{IN} f_{SW} I_{OUTMAX} K_{RIPPLE}} \quad (2)$$

where V_{IN} is the input voltage, V_{OUT} is the output voltage, f_{SW} is the switching frequency, I_{OUTMAX} is the maximum output current, and K_{RIPPLE} is the ripple factor. Typically, choose K_{RIPPLE} = 30% to correspond to the peak-to-peak ripple current being 30% of the maximum output current.

With this inductor value, the peak inductor current is I_{OUT} • (1 + K_{RIPPLE} / 2). Make sure that this peak inductor current is less that the 3A current limit. Finally, select the inductor core size so that it does not saturate at 3A. Typical inductor values for various output voltages are shown in Table 1.

V_{OUT}	1.5V	1.8V	2.5V	3.3V	5V
L	6.8μH	6.8μH	10μH	15μH	22μH

Table 1. Typical Inductor Values

Input Capacitor

The input capacitor needs to be carefully selected to maintain sufficiently low ripple at the supply input of the converter. A low ESR capacitor is highly recommended. Since large current flows in and out of this capacitor during switching, its ESR also affects efficiency.

The input capacitance needs to be higher than 10μF. The best choice is the ceramic type; however, low ESR tantalum or electrolytic types may also be used provided that the RMS ripple current rating is higher than 50% of the output current. The input capacitor should be placed close to the IN and G pins of the IC, with the shortest traces possible. In the case of tantalum or electrolytic types, they can be further away if a small parallel 0.1μF ceramic capacitor is placed right next to the IC.

Output Capacitor

The output capacitor also needs to have low ESR to keep low output voltage ripple. The output ripple voltage is:

$$V_{RIPPLE} = I_{OUTMAX} K_{RIPPLE} R_{ESR} + \frac{V_{IN}}{28 \bullet f_{SW}^{2} L C_{OUT}} \quad (3)$$

where I_{OUTMAX} is the maximum output current, K_{RIPPLE} is the ripple factor, R_{ESR} is the ESR of the output capacitor, f_{SW} is the switching frequency, L is the inductor value, and C_{OUT} is the output capacitance. In the case of ceramic output capacitors, R_{ESR} is very small and does not contribute to the ripple. Therefore, a lower capacitance value can be used for ceramic capacitors. In the case of tantalum or electrolytic capacitors, the ripple is dominated by R_{ESR} multiplied by the ripple current. In that case, the output capacitor is chosen to have sufficiently low ESR.

For ceramic output capacitors, typically choose a capacitance of about 22μF. For tantalum or electrolytic capacitors, choose a capacitor with less than 50mΩ ESR.

Rectifier Diode

Use a Schottky diode as the rectifier to conduct current when the High-Side Power Switch is off. The Schottky diode must have a current rating higher than the maximum output current and a reverse voltage rating higher than the maximum input voltage.

Stability Compensation

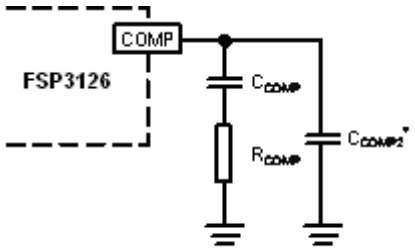

C_{COMP2} is needed only for high ESR output capacitor

Figure 2. Stability Compensation

The feedback loop of the IC is stabilized by the components at the COMP pin, as shown in Figure 2. The DC loop gain of the system is determined by the following equation:

$$A_{VDC} = \frac{1.3V}{I_{OUT}} A_{VEA} G_{COMP} \quad (4)$$

The dominant pole P1 is due to C_{COMP}:

$$f_{P1} = \frac{G_{EA}}{2\pi A_{VEA} C_{COMP}} \quad (5)$$

The second pole P2 is the output pole:

$$f_{P2} = \frac{I_{OUT}}{2\pi V_{OUT} C_{OUT}} \quad (6)$$

The first zero Z1 is due to R_{COMP} and C_{COMP}:

$$f_{Z1} = \frac{1}{2\pi R_{COMP} C_{COMP}} \quad (7)$$

And finally, the third pole is due to R_{COMP} and C_{COMP2} (if C_{COMP2} is used):

$$f_{P3} = \frac{1}{2\pi R_{COMP} C_{COMP2}} \quad (8)$$

The following steps should be used to compensate the IC:

STEP1. Set the crossover frequency at 1/10 of the switching frequency via RCOMP:

$$R_{COMP} = \frac{2\pi V_{OUT} C_{OUT} f_{SW}}{10 G_{EA} G_{COMP} \bullet 1.3V} \quad (9)$$

but limit RCOMP to 15kΩ maximum.

STEP2. Set the zero fZ1 at 1/4 of the crossover frequency. If RCOMP is less than 15kΩ, the equation for CCOMP is:

$$C_{COMP} = \frac{1.8 \times 10^{-5}}{R_{COMP}} \quad (F) \quad (10)$$

If RCOMP is limited to 15kΩ, then the actual crossover frequency is 3.4 / (VOUTCOUT). Therefore:

$$C_{COMP} = 1.2 \times 10^{-5} V_{OUT} C_{OUT} \quad (F) \quad (11)$$

STEP3. If the output capacitor's ESR is high enough to cause a zero at lower than 4 times the crossover frequency, an additional compensation capacitor CCOMP2 is required. The condition for using CCOMP2 is:

$$R_{ESRCOUT} \geq Min\left(\frac{1.1 \times 10^{-6}}{C_{OUT}}, 0.012 \bullet V_{OUT}\right) \quad (\Omega) \quad (12)$$

And the proper value for C_{COMP2} is:

$$C_{COMP2} = \frac{C_{OUT} R_{ESRCOUT}}{R_{COMP}} \quad (13)$$

Though C_{COMP2} is unnecessary when the output capacitor has sufficiently low ESR, a small value C_{COMP2} such as 100pF may improve stability against PCB layout parasitic effects.
Table 2 shows some calculated results based on the compensation method above.

V_{OUT}	C_{OUT}	R_{COMP}	C_{COMP}	C_{COMP2}
2.5V	22μF Ceramic	8.2kΩ	2.2nF	None
3.3V	22μF Ceramic	12kΩ	1.5nF	None
5V	22μF Ceramic	15kΩ	1.5nF	None
2.5V	47μF SP Cap	15kΩ	1.5nF	None
3.3V	47μF SP Cap	15kΩ	1.8nF	None
5V	47μF SP Cap	15kΩ	2.7nF	None
2.5V	470μF/6.3V/30mΩ	15kΩ	15nF	1nF
3.3V	470μF/6.3V/30mΩ	15kΩ	22nF	1nF
5V	470μF/10V/30mΩ	15kΩ	27nF	None

Table 2. Typical Compensation for Different Output Voltages and Output Capacitors

Figure 3 shows a sample FSP3126 application circuit generating 2.5V/2A output.

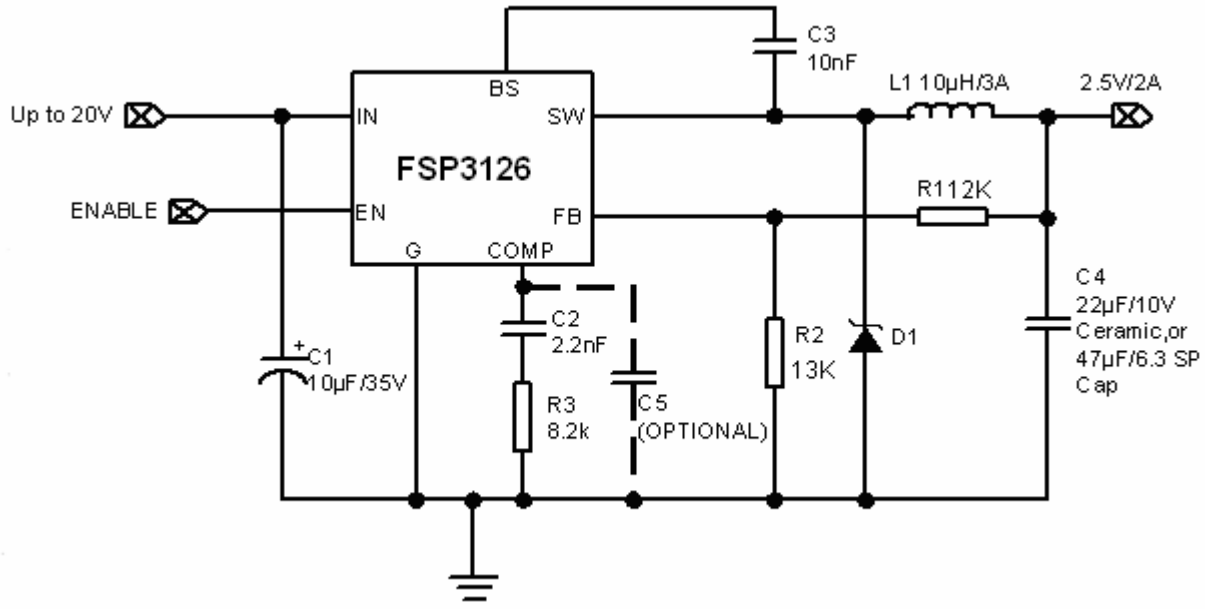

Figure3. FSP3126 2.5V/2A Output Application

■ TYPICAL CHARACTERISTICS

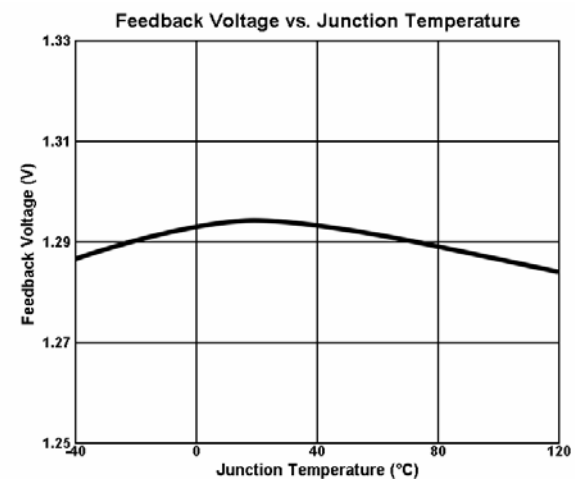

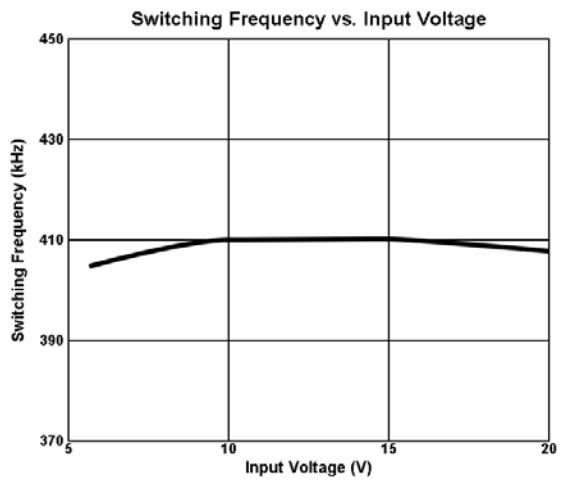

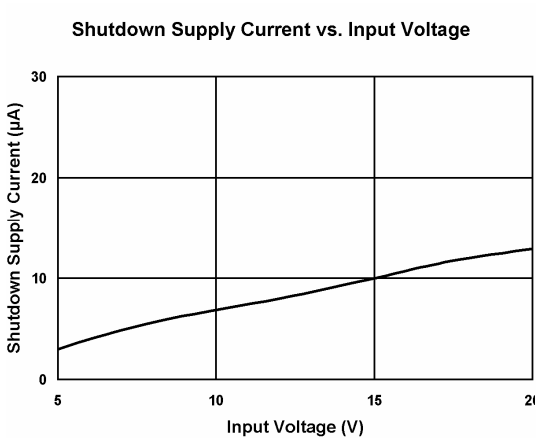

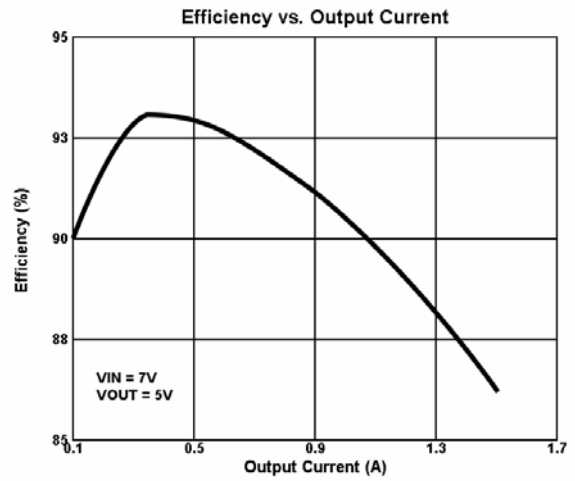

■ ORDER INFORMATION

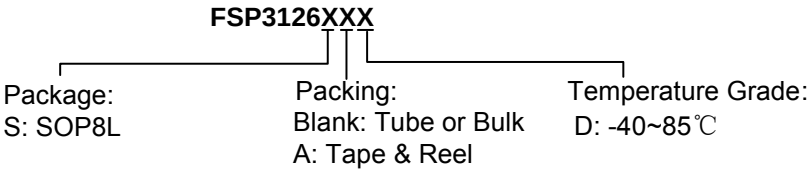

■ MARKING INFORMATION

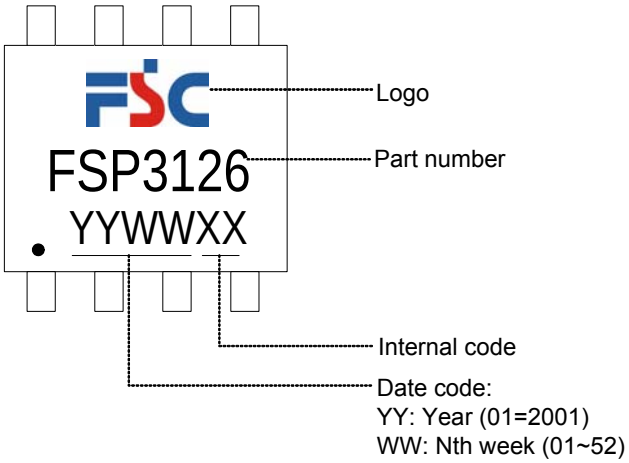

■ PACKAGE INFORMATION

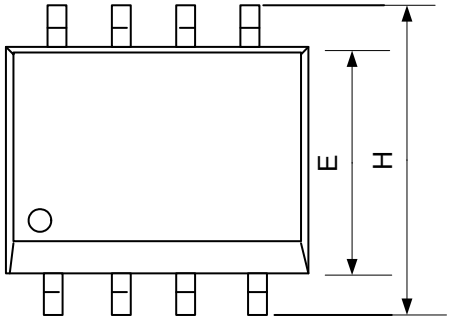

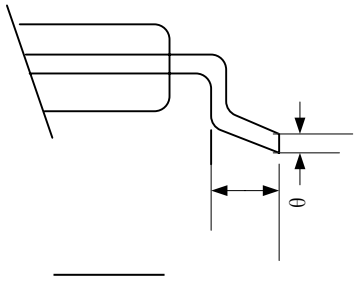

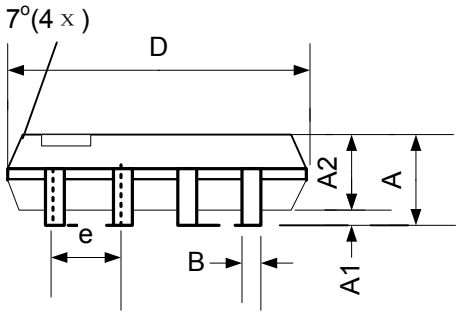

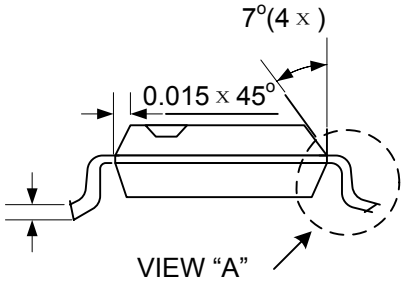

Symbol	Dimensions In Millimeters			Dimensions In Inches		
	Min.	Nom.	Max.	Min.	Nom.	Max.
A	1.35	1.60	1.75	0.053	0.063	0.069
A1	0.10		0.25	0..004		0.010
A2	1.35	1.45	1.55	0.053	0.057	0.061
B	0.33	0.41	0.51	0.013	0.016	0.020
C	0.19	0.20	0.25	0.0075	0.008	0.010
D	4.80	4.90	5.00	0.192	0.196	0.200
E	3.80	3.90	4.00	0.148	0.154	0.160
e	1.27TYP.			0.050TYP.		
H	5.80	5.99	6.30	0.228	0.236	0.248
L	0.38	0.71	1.27	0.015	0.028	0.050
θ	0°		8°	0°		8°