Data Sheet June 1999 File Number 4476.2

6A, 200V, 0.350 Ohm, Radiation Hardened, SEGR Resistant, N-Channel Power MOSFETs

The Discrete Products Operation of Intersil Corporation has developed a series of Radiation Hardened MOSFETs specifically designed for commercial and military space applications. Enhanced Power MOSFET immunity to Single Event Effects (SEE), Single Event Gate Rupture (SEGR) in particular, is combined with 100K RADS of total dose hardness to provide devices which are ideally suited to harsh space environments. The dose rate and neutron tolerance necessary for military applications have not been sacrificed.

The Intersil portfolio of SEGR resistant radiation hardened MOSFETs includes N-Channel and P-Channel devices in a variety of voltage, current and on-resistance ratings. Numerous packaging options are also available.

This MOSFET is an enhancement-mode silicon-gate power field-effect transistor of the vertical DMOS (VDMOS) structure. It is specially designed and processed to be radiation tolerant. The MOSFET is well suited for applications exposed to radiation environments such as switching regulation, switching converters, motor drives, relay drivers and drivers for high-power bipolar switching transistors requiring high speed and low gate drive power. This type can be operated directly from integrated circuits.

Reliability screening is available as either commercial, TXV equivalent of MIL-S-19500, or Space equivalent of MIL-S-19500. Contact Intersil for any desired deviations from the data sheet.

Ordering Information

RAD LEVEL	SCREENING LEVEL	PART NUMBER/BRAND
10K	Commercial	FSL23A0D1
10K	TXV	FSL23A0D3
100K	Commercial	FSL23A0R1
100K	TXV	FSL23A0R3
100K	Space	FSL23A0R4

Formerly available as type TA17697.

Features

- 6A, 200V, $r_{DS(ON)} = 0.350\Omega$
- Total Dose
  - Meets Pre-RAD Specifications to 100K RAD (Si)
- Single Event
  - Safe Operating Area Curve for Single Event Effects
  - SEE Immunity for LET of 36MeV/mg/cm^2 with V_{DS} up to 80% of Rated Breakdown and V_{GS} of 10V Off-Bias
- Dose Rate
  - Typically Survives 3E9 RAD (Si)/s at 80% BV_{DSS}
  - Typically Survives 2E12 if Current Limited to I_{DM}
- Photo Current
  - 3.0nA Per-RAD(Si)/s Typically
- Neutron
  - Maintain Pre-RAD Specifications for 1E13 Neutrons/cm^2
  - Usable to 1E14 Neutrons/cm^2

Symbol

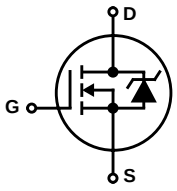

Package

TO-205AF

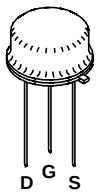

CAUTION: These devices are sensitive to electrostatic discharge; follow proper IC Handling Procedures.
1-888-INTERSIL or 321-724-7143 | Copyright © Intersil Corporation 2000

Absolute Maximum Ratings $T_C = 25^oC$, Unless Otherwise Specified

		FSL23A0D, FSL23A0R	UNITS
Drain to Source Voltage	V_{DS}	200	V
Drain to Gate Voltage (R_{GS} = 20kΩ)	V_{DGR}	200	V
Continuous Drain Current			
$T_C = 25^oC$	I_D	6	A
$T_C = 100^oC$	I_D	4	A
Pulsed Drain Current	I_{DM}	18	A
Gate to Source Voltage	V_{GS}	±20	V
Maximum Power Dissipation			
$T_C = 25^oC$	P_T	25	W
$T_C = 100^oC$	P_T	10	W
Linear Derating Factor		0.20	$W/^oC$
Single Pulsed Avalanche Current, L = 100μH, (See Test Figure)	I_{AS}	18	A
Continuous Source Current (Body Diode)	I_S	6	A
Pulsed Source Current (Body Diode)	I_{SM}	18	A
Operating and Storage Temperature	T_J, T_{STG}	-55 to 150	^oC
Lead Temperature (During Soldering) (Distance >0.063in (1.6mm) from Case, 10s Max)	T_L	300	^oC

CAUTION: Stresses above those listed in "Absolute Maximum Ratings" may cause permanent damage to the device. This is a stress only rating and operation of the device at these or any other conditions above those indicated in the operational sections of this specification is not implied.

Electrical Specifications $T_C = 25^oC$, Unless Otherwise Specified

PARAMETER	SYMBOL	TEST CONDITIONS		MIN	TYP	MAX	UNITS
Drain to Source Breakdown Voltage	BV_{DSS}	I_D = 1mA, V_{GS} = 0V		200	-	-	V
Gate Threshold Voltage	$V_{GS(TH)}$	$V_{GS} = V_{DS}$, I_D = 1mA	$T_C = -55^oC$	-	-	5.0	V
			$T_C = 25^oC$	1.5	-	4.0	V
			$T_C = 125^oC$	0.5	-	-	V
Zero Gate Voltage Drain Current	I_{DSS}	V_{DS} = 160V, V_{GS} = 0V	$T_C = 25^oC$	-	-	25	μA
			$T_C = 125^oC$	-	-	250	μA
Gate to Source Leakage Current	I_{GSS}	V_{GS} = ±20V	$T_C = 25^oC$	-	-	100	nA
			$T_C = 125^oC$	-	-	200	nA
Drain to Source On-State Voltage	$V_{DS(ON)}$	V_{GS} = 12V, I_D = 6A		-	-	2.21	V
Drain to Source On Resistance	$r_{DS(ON)12}$	I_D = 4A, V_{GS} = 12V	$T_C = 25^oC$	-	0.280	0.350	Ω
			$T_C = 125^oC$	-	-	0.637	Ω
Turn-On Delay Time	$t_{d(ON)}$	V_{DD} = 100V, I_D = 6A, R_L = 16.7Ω, V_{GS} = 12V, R_{GS} = 7.5Ω		-	-	20	ns
Rise Time	t_r			-	-	30	ns
Turn-Off Delay Time	$t_{d(OFF)}$			-	-	55	ns
Fall Time	t_f			-	-	15	ns
Total Gate Charge	$Q_{g(TOT)}$	V_{GS} = 0V to 20V	V_{DD} = 100V, I_D = 6A	-	-	57	nC
Gate Charge at 12V	$Q_{g(12)}$	V_{GS} = 0V to 12V		-	34	38	nC
Threshold Gate Charge	$Q_{g(TH)}$	V_{GS} = 0V to 2V		-	-	1.9	nC
Gate Charge Source	Q_{gs}			-	6.0	6.8	nC
Gate Charge Drain	Q_{gd}			-	18	20	nC
Plateau Voltage	$V_{(PLATEAU)}$	I_D = 6A, V_{DS} = 15V		-	7	-	V
Input Capacitance	C_{ISS}	V_{DS} = 25V, V_{GS} = 0V, f = 1MHz		-	750	-	pF
Output Capacitance	C_{OSS}			-	180	-	pF
Reverse Transfer Capacitance	C_{RSS}			-	50	-	pF
Thermal Resistance Junction to Case	$R_{\theta JC}$			-	-	5.0	$^oC/W$
Thermal Resistance Junction to Ambient	$R_{\theta JA}$			-	-	175	$^oC/W$

Source to Drain Diode Specifications

PARAMETER	SYMBOL	TEST CONDITIONS	MIN	TYP	MAX	UNITS
Forward Voltage	V_{SD}	I_{SD} = 6A	0.6	-	1.8	V
Reverse Recovery Time	t_{rr}	I_{SD} = 6A, dI_{SD}/dt = 100A/µs	-	-	290	ns

Electrical Specifications up to 100K RAD $T_C = 25^oC$, Unless Otherwise Specified

PARAMETER		SYMBOL	TEST CONDITIONS	MIN	MAX	UNITS
Drain to Source Breakdown Volts	(Note 3)	BV_{DSS}	V_{GS} = 0, I_D = 1mA	200	-	V
Gate to Source Threshold Volts	(Note 3)	$V_{GS(TH)}$	V_{GS} = V_{DS}, I_D = 1mA	1.5	4.0	V
Gate to Body Leakage	(Notes 2, 3)	I_{GSS}	V_{GS} = ±20V, V_{DS} = 0V	-	100	nA
Zero Gate Leakage	(Note 3)	I_{DSS}	V_{GS} = 0, V_{DS} = 160V	-	25	µA
Drain to Source On-State Volts	(Notes 1, 3)	$V_{DS(ON)}$	V_{GS} = 12V, I_D = 6A	-	2.21	V
Drain to Source On Resistance	(Notes 1, 3)	$r_{DS(ON)12}$	V_{GS} = 12V, I_D = 4A	-	0.350	Ω

NOTES:

1. Pulse test, 300µs Max.
2. Absolute value.
3. Insitu Gamma bias must be sampled for both V_{GS} = 12V, V_{DS} = 0V and V_{GS} = 0V, V_{DS} = 80% BV_{DSS}.

Single Event Effects (SEB, SEGR) (Note 4)

TEST	SYMBOL	ENVIRONMENT (NOTE 5)			APPLIED V_{GS} BIAS (V)	(NOTE 6) MAXIMUM V_{DS} BIAS (V)
		ION SPECIES	TYPICAL LET (MeV/mg/cm)	TYPICAL RANGE (µ)		
Single Event Effects Safe Operating Area	SEESOA	Ni	26	43	-20	200
		Br	37	36	-5	200
		Br	37	36	-10	160
		Br	37	36	-15	100
		Br	37	36	-20	40

NOTES:

4. Testing conducted at Brookhaven National Labs; sponsored by Naval Surface Warfare Center (NSWC), Crane, IN.
5. Fluence = 1E5 ions/cm^2 (typical), T = 25^oC.
6. Does not exhibit Single Event Burnout (SEB) or Single Event Gate Rupture (SEGR).

Typical Performance Curves Unless Otherwise Specified

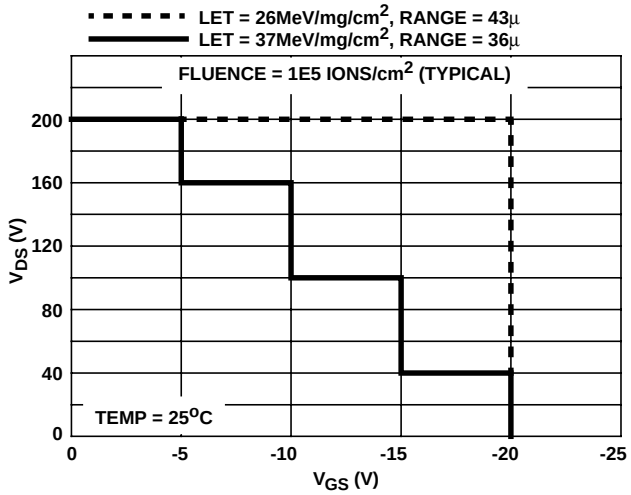

FIGURE 1. SINGLE EVENT EFFECTS SAFE OPERATING AREA

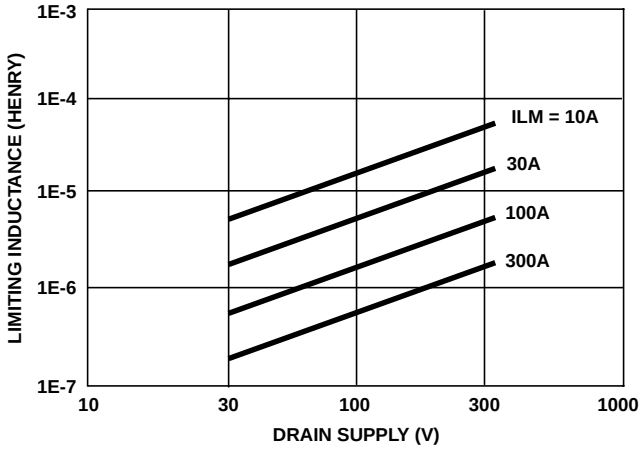

FIGURE 2. DRAIN INDUCTANCE REQUIRED TO LIMIT GAMMA DOT CURRENT TO I_{AS}

Typical Performance Curves Unless Otherwise Specified (Continued)

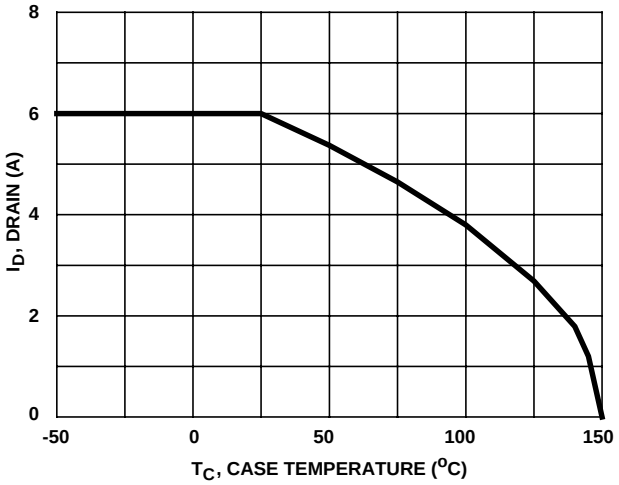

FIGURE 3. MAXIMUM CONTINUOUS DRAIN CURRENT vs TEMPERATURE

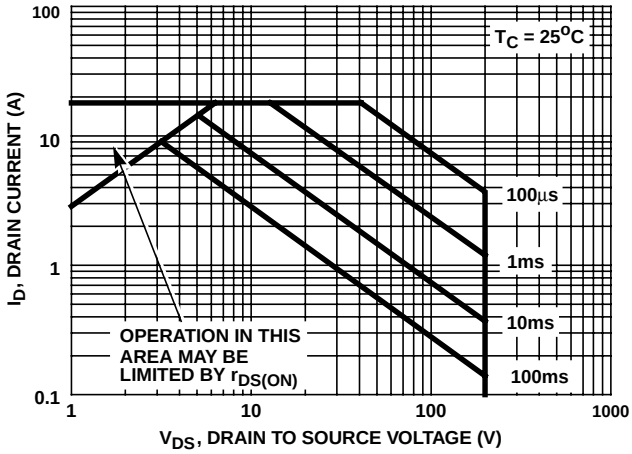

FIGURE 4. FORWARD BIAS SAFE OPERATING AREA

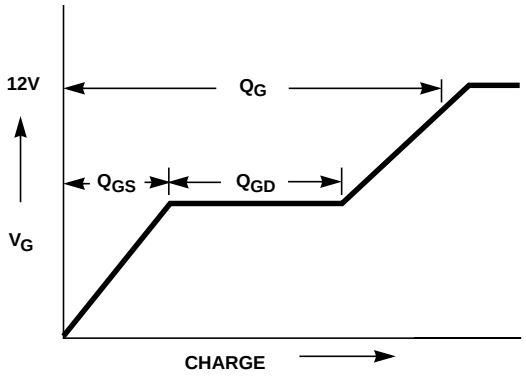

FIGURE 5. BASIC GATE CHARGE WAVEFORM

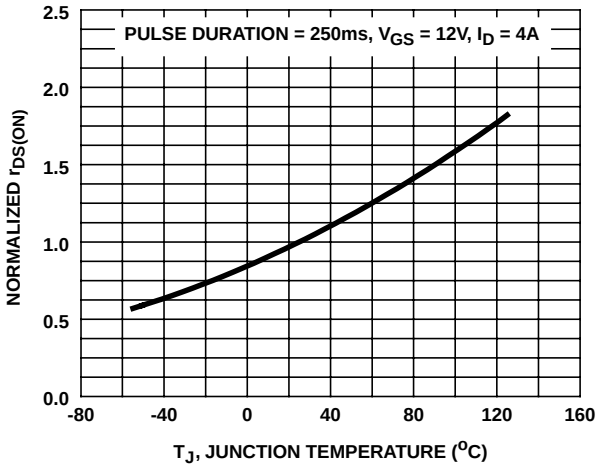

FIGURE 6. NORMALIZED $r_{DS(ON)}$ vs JUNCTION TEMPERATURE

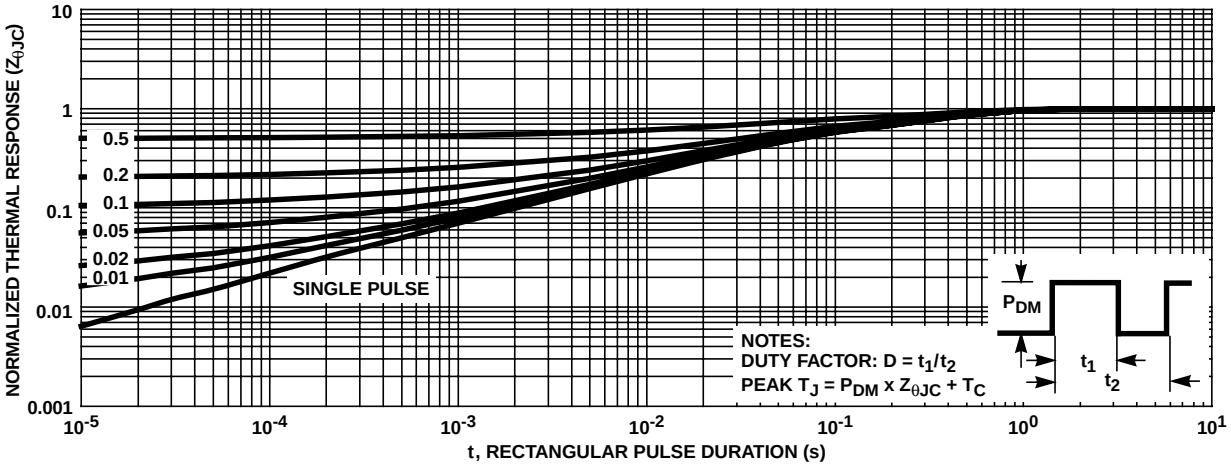

FIGURE 7. NORMALIZED MAXIMUM TRANSIENT THERMAL RESPONSE

Typical Performance Curves Unless Otherwise Specified (Continued)

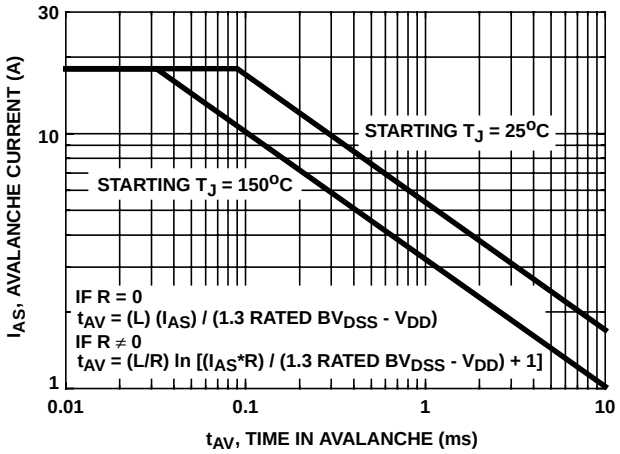

FIGURE 8. UNCLAMPED INDUCTIVE SWITCHING

Test Circuits and Waveforms

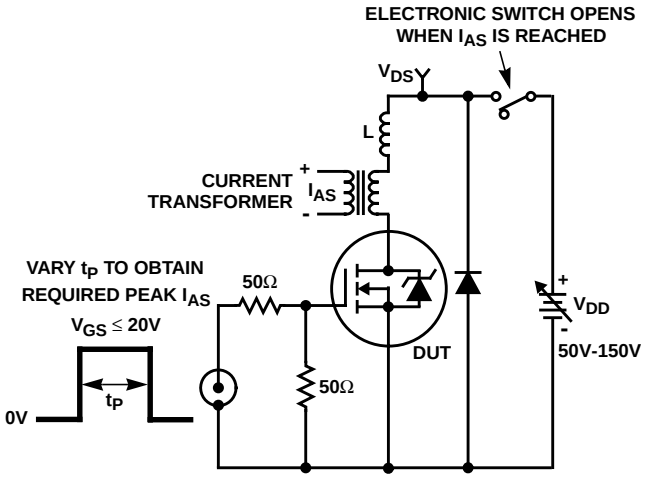

FIGURE 9. UNCLAMPED ENERGY TEST CIRCUIT

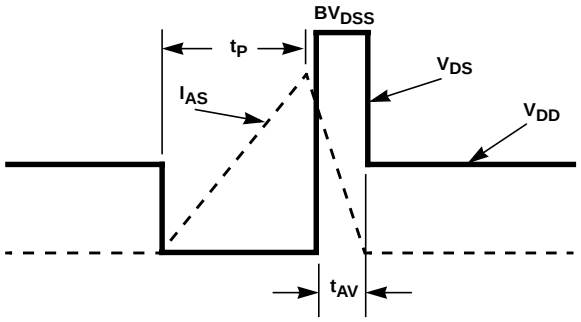

FIGURE 10. UNCLAMPED ENERGY WAVEFORMS

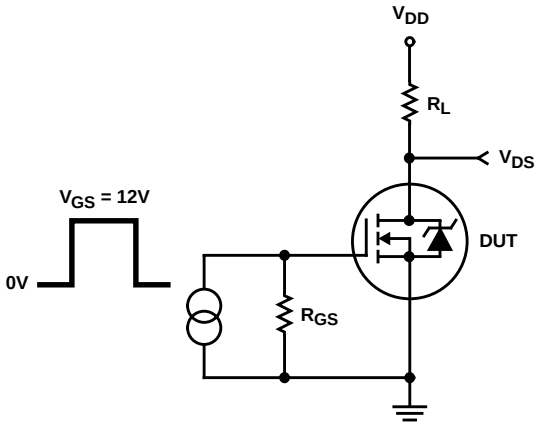

FIGURE 11. RESISTIVE SWITCHING TEST CIRCUIT

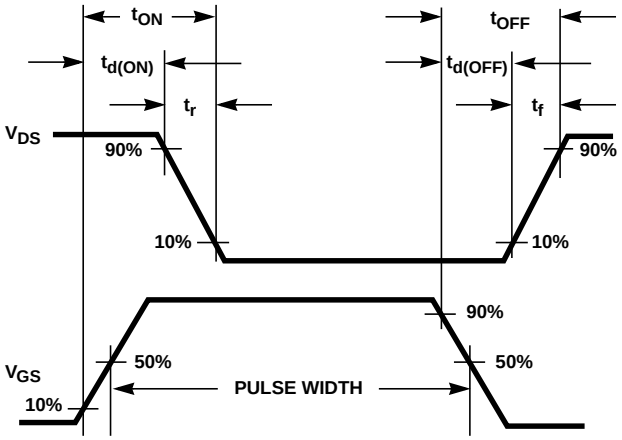

FIGURE 12. RESISTIVE SWITCHING WAVEFORMS

Screening Information

Screening is performed in accordance with the latest revision in effect of MIL-S-19500, (Screening Information Table).

Delta Tests and Limits (JANTXV Equivalent, JANS Equivalent) $T_C = 25^oC$, Unless Otherwise Specified

PARAMETER	SYMBOL	TEST CONDITIONS	MAX	UNITS
Gate to Source Leakage Current	I_{GSS}	$V_{GS} = \pm 20V$	±20 (Note 7)	nA
Zero Gate Voltage Drain Current	I_{DSS}	V_{DS} = 80% Rated Value	±25 (Note 7)	µA
Drain to Source On Resistance	$r_{DS(ON)}$	$T_C = 25^oC$ at Rated I_D	±20% (Note 8)	Ω
Gate Threshold Voltage	$V_{GS(TH)}$	I_D = 1.0mA	±20% (Note 8)	V

NOTES:

7. Or 100% of Initial Reading (whichever is greater).
8. Of Initial Reading.

Screening Information

TEST	JANTXV EQUIVALENT	JANS EQUIVALENT
Gate Stress	V_{GS} = 30V, t = 250µs	V_{GS} = 30V, t = 250µs
Pind	Optional	Required
Pre Burn-In Tests (Note 9)	MIL-S-19500 Group A, Subgroup 2 (All Static Tests at 25^oC)	MIL-S-19500 Group A, Subgroup 2 (All Static Tests at 25^oC)
Steady State Gate Bias (Gate Stress)	MIL-STD-750, Method 1042, Condition B V_{GS} = 80% of Rated Value, $T_A = 150^oC$, Time = 48 hours	MIL-STD-750, Method 1042, Condition B V_{GS} = 80% of Rated Value, $T_A = 150^oC$, Time = 48 hours
Interim Electrical Tests (Note 9)	All Delta Parameters Listed in the Delta Tests and Limits Table	All Delta Parameters Listed in the Delta Tests and Limits Table
Steady State Reverse Bias (Drain Stress)	MIL-STD-750, Method 1042, Condition A V_{DS} = 80% of Rated Value, $T_A = 150^oC$, Time = 160 hours	MIL-STD-750, Method 1042, Condition A V_{DS} = 80% of Rated Value, $T_A = 150^oC$, Time = 240 hours
PDA	10%	5%
Final Electrical Tests (Note 9)	MIL-S-19500, Group A, Subgroup 2	MIL-S-19500, Group A, Subgroups 2 and 3

NOTE:

9. Test limits are identical pre and post burn-in.

Additional Screening Tests

PARAMETER	SYMBOL	TEST CONDITIONS	MAX	UNITS
Safe Operating Area	SOA	V_{DS} = 160V, t = 10ms	0.46	A
Unclamped Inductive Switching	I_{AS}	$V_{GS(PEAK)}$ = 15V, L = 0.1mH	18	A
Thermal Response	ΔV_{SD}	t_H = 10ms; V_H = 25V; I_H = 1A	60	mV
Thermal Impedance	ΔV_{SD}	t_H = 500ms; V_H = 25V; I_H = 1A	230	mV

Rad Hard Data Packages - Intersil Power Transistors

TXV Equivalent

1. RAD HARD TXV EQUIVALENT - STANDARD DATA PACKAGE

A. Certificate of Compliance

B. Assembly Flow Chart

C. Preconditioning - Attributes Data Sheet

D. Group A - Attributes Data Sheet

E. Group B - Attributes Data Sheet

F. Group C - Attributes Data Sheet

G. Group D - Attributes Data Sheet

2. RAD HARD TXV EQUIVALENT - OPTIONAL DATA PACKAGE

A. Certificate of Compliance

B. Assembly Flow Chart

C. Preconditioning
- Attributes Data Sheet
- Precondition Lot Traveler
- Pre and Post Burn-In Read and Record Data

D. Group A
- Attributes Data Sheet
- Group A Lot Traveler

E. Group B
- Attributes Data Sheet
- Group B Lot Traveler
- Pre and Post Read and Record Data for Intermittent Operating Life (Subgroup B3)
- Bond Strength Data (Subgroup B3)
- Pre and Post High Temperature Operating Life Read and Record Data (Subgroup B6)

F. Group C
- Attributes Data Sheet
- Group C Lot Traveler
- Pre and Post Read and Record Data for Intermittent Operating Life (Subgroup C6)
- Bond Strength Data (Subgroup C6)

G. Group D
- Attributes Data Sheet
- Group D Lot Traveler
- Pre and Post RAD Read and Record Data

Class S - Equivalents

1. RAD HARD “S” EQUIVALENT - STANDARD DATA PACKAGE

A. Certificate of Compliance

B. Serialization Records

C. Assembly Flow Chart

D. SEM Photos and Report

E. Preconditioning
- Attributes Data Sheet
- Hi-Rel Lot Traveler
- HTRB - Hi Temp Gate Stress Post Reverse Bias Data and Delta Data
- HTRB - Hi Temp Drain Stress Post Reverse Bias Delta Data

F. Group A - Attributes Data Sheet

G. Group B - Attributes Data Sheet

H. Group C - Attributes Data Sheet

I. Group D - Attributes Data Sheet

2. RAD HARD MAX. “S” EQUIVALENT - OPTIONAL DATA PACKAGE

A. Certificate of Compliance

B. Serialization Records

C. Assembly Flow Chart

D. SEM Photos and Report

E. Preconditioning
- Attributes Data Sheet
- Hi-Rel Lot Traveler
- HTRB - Hi Temp Gate Stress Post Reverse Bias Data and Delta Data
- HTRB - Hi Temp Drain Stress Post Reverse Bias Delta Data
- X-Ray and X-Ray Report

F. Group A
- Attributes Data Sheet
- Hi-Rel Lot Traveler
- Subgroups A2, A3, A4, A5 and A7 Data

G. Group B
- Attributes Data Sheet
- Hi-Rel Lot Traveler
- Subgroups B1, B3, B4, B5 and B6 Data

H. Group C
- Attributes Data Sheet
- Hi-Rel Lot Traveler
- Subgroups C1, C2, C3 and C6 Data

I. Group D
- Attributes Data Sheet
- Hi-Rel Lot Traveler
- Pre and Post Radiation Data

TO-205AF

3 LEAD JEDEC TO-205AF HERMETIC METAL CAN PACKAGE

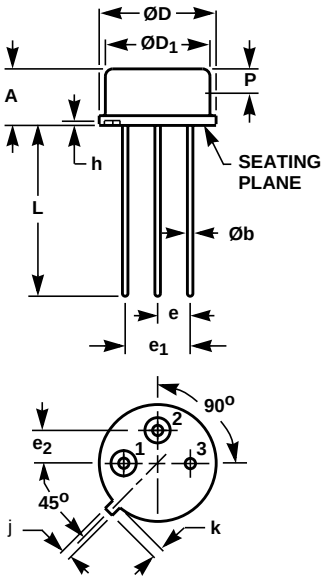

SYMBOL	INCHES		MILLIMETERS		NOTES
	MIN	MAX	MIN	MAX	
A	0.160	0.180	4.07	4.57	-
Øb	0.016	0.021	0.41	0.53	2, 3
ØD	0.350	0.370	8.89	9.39	-
$ØD_1$	0.315	0.335	8.01	8.50	-
e	0.095	0.105	2.42	2.66	4
e_1	0.190	0.210	4.83	5.33	4
e_2	0.095	0.105	2.42	2.66	4
h	0.010	0.020	0.26	0.50	-
j	0.028	0.034	0.72	0.86	-
k	0.029	0.045	0.74	1.14	-
L	0.500	0.560	12.70	14.22	3
P	0.075	-	1.91	-	5

NOTES:

1. These dimensions are within allowable dimensions of Rev. E of JEDEC TO-205AF outline dated 11-82.
2. Lead dimension (without solder).
3. Solder coating may vary along lead length, add typically 0.002 inches (0.05mm) for solder coating.
4. Position of lead to be measured 0.100 inches (2.54mm) from bottom of seating plane.
5. This zone controlled for automatic handling. The variation in actual diameter within this zone shall not exceed 0.010 inches (0.254mm).
6. Lead no. 3 butt welded to stem base.
7. Controlling dimension: Inch.
8. Revision 3 dated 6-94.

All Intersil semiconductor products are manufactured, assembled and tested under **ISO9000** quality systems certification.

Intersil semiconductor products are sold by description only. Intersil Corporation reserves the right to make changes in circuit design and/or specifications at any time without notice. Accordingly, the reader is cautioned to verify that data sheets are current before placing orders. Information furnished by Intersil is believed to be accurate and reliable. However, no responsibility is assumed by Intersil or its subsidiaries for its use; nor for any infringements of patents or other rights of third parties which may result from its use. No license is granted by implication or otherwise under any patent or patent rights of Intersil or its subsidiaries.

For information regarding Intersil Corporation and its products, see web site **www.intersil.com**

Sales Office Headquarters

NORTH AMERICA
Intersil Corporation
P. O. Box 883, Mail Stop 53-204
Melbourne, FL 32902
TEL: (321) 724-7000
FAX: (321) 724-7240

EUROPE
Intersil SA
Mercure Center
100, Rue de la Fusee
1130 Brussels, Belgium
TEL: (32) 2.724.2111
FAX: (32) 2.724.22.05

ASIA
Intersil (Taiwan) Ltd.
7F-6, No. 101 Fu Hsing North Road
Taipei, Taiwan
Republic of China
TEL: (886) 2 2716 9310
FAX: (886) 2 2715 3029