

Is Now Part of



ON Semiconductor®

To learn more about ON Semiconductor, please visit our website at
www.onsemi.com

Please note: As part of the Fairchild Semiconductor integration, some of the Fairchild orderable part numbers will need to change in order to meet ON Semiconductor's system requirements. Since the ON Semiconductor product management systems do not have the ability to manage part nomenclature that utilizes an underscore (_), the underscore (_) in the Fairchild part numbers will be changed to a dash (-). This document may contain device numbers with an underscore (_). Please check the ON Semiconductor website to verify the updated device numbers. The most current and up-to-date ordering information can be found at www.onsemi.com. Please email any questions regarding the system integration to Fairchild_questions@onsemi.com.

ON Semiconductor and the ON Semiconductor logo are trademarks of Semiconductor Components Industries, LLC dba ON Semiconductor or its subsidiaries in the United States and/or other countries. ON Semiconductor owns the rights to a number of patents, trademarks, copyrights, trade secrets, and other intellectual property. A listing of ON Semiconductor's product/patent coverage may be accessed at www.onsemi.com/site/pdf/Patent-Marking.pdf. ON Semiconductor reserves the right to make changes without further notice to any products herein. ON Semiconductor makes no warranty, representation or guarantee regarding the suitability of its products for any particular purpose, nor does ON Semiconductor assume any liability arising out of the application or use of any product or circuit, and specifically disclaims any and all liability, including without limitation special, consequential or incidental damages. Buyer is responsible for its products and applications using ON Semiconductor products, including compliance with all laws, regulations and safety requirements or standards, regardless of any support or applications information provided by ON Semiconductor. "Typical" parameters which may be provided in ON Semiconductor data sheets and/or specifications can and do vary in different applications and actual performance may vary over time. All operating parameters, including "Typicals" must be validated for each customer application by customer's technical experts. ON Semiconductor does not convey any license under its patent rights nor the rights of others. ON Semiconductor products are not designed, intended, or authorized for use as a critical component in life support systems or any FDA Class 3 medical devices or medical devices with a same or similar classification in a foreign jurisdiction or any devices intended for implantation in the human body. Should Buyer purchase or use ON Semiconductor products for any such unintended or unauthorized application, Buyer shall indemnify and hold ON Semiconductor and its officers, employees, subsidiaries, affiliates, and distributors harmless against all claims, costs, damages, and expenses, and reasonable attorney fees arising out of, directly or indirectly, any claim of personal injury or death associated with such unintended or unauthorized use, even if such claim alleges that ON Semiconductor was negligent regarding the design or manufacture of the part. ON Semiconductor is an Equal Opportunity/Affirmative Action Employer. This literature is subject to all applicable copyright laws and is not for resale in any manner.

June 2014

FSA641 — 2:1 MIPI Switch, Featuring 2-Data and 1-Data Lane Configuration

Features

- Switch Type: 2:1
- Signal Types MIPI, DPHY
- V_{CC}: 2.65 to 4.3 V
- Input Signals 0 to V_{CC}
- R_{ON}:
  - 7 Ω Typical HS MIPI
  - 10 Ω Typical LS MIPI
- ΔR_{ON}: 0.75 Ω Typical HS & LS MIPI
- I_{CC}: 1 µA Maximum
- O_{IRR}: -50 dB Typical
- X_{TALK}: -40 dB Typical
- Bandwidth: 1 GHz Typical
- Channel-to-Channel Skew: 15 ps Typical
- C_{ON}: 8 pF Typical
- Package 20-Lead UMLP

Applications

- Cellular Phones, Smartphones
- Displays

Description

The FSA641 is a 2:1 MIPI switch made for 2-data lane and 1-data lane modules. This part is configured as a single-pole, double-throw switch (SPDT) and is optimized for switching between two high-speed or low-power MIPI sources. The FSA641 has specially been designed for the MIPI specification and allows connection to either a CSI or DSI module. The FSA641 features an extremely low on capacitance (C_{ON}) of 8 pF. The wide bandwidth (1 GHz) results in signals with minimum edge and phase distortion. Superior channel-to-channel crosstalk minimizes interference.

Related Resources

- For samples and questions, please contact: Analog.Switch@fairchildsemi.com.
- FSA641 Demonstration Board

Ordering Information

Part Number	Top Mark	Operating Temperature Range	Package
FSA641UMX	F641	-40 to +85°C	20-Lead, Quad, Ultrathin Molded Leadless Package (UMLP), 3.0 x 3.0 mm

© 2010 Fairchild Semiconductor Corporation

Typical Application

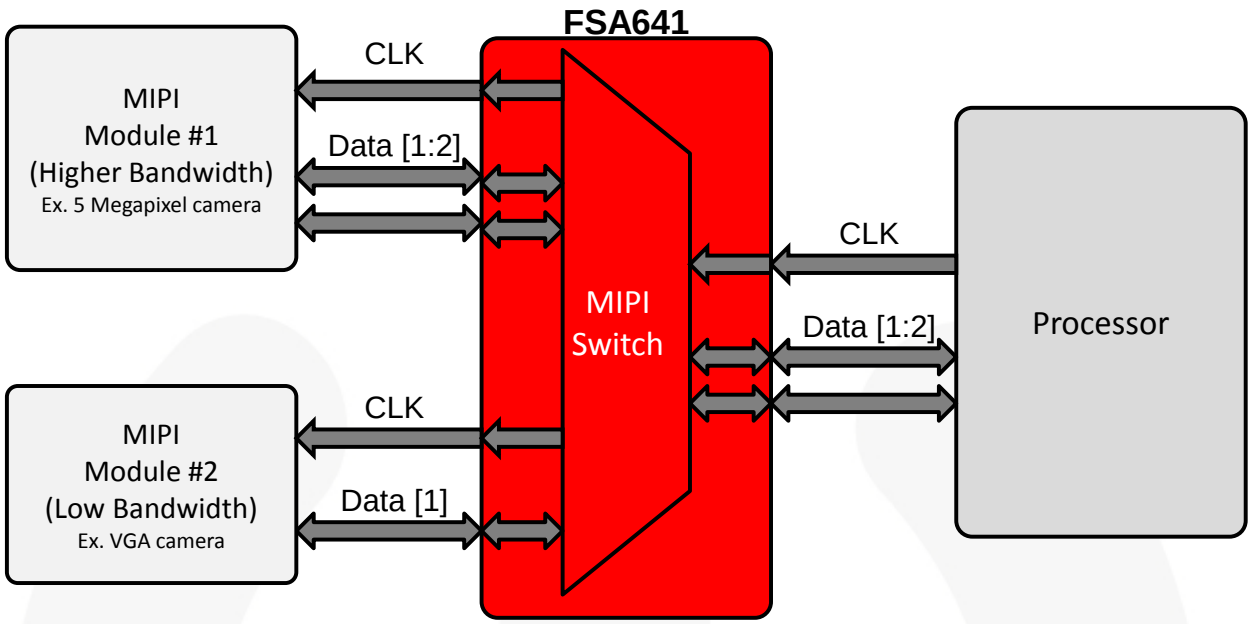

Figure 1. Mobile Phone Example

Pin Configuration

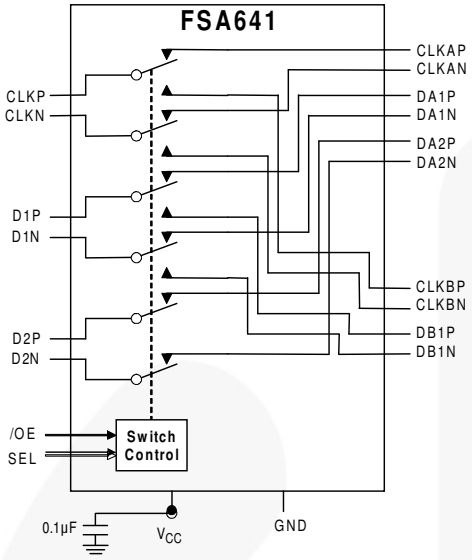

Figure 2. Functional Block Diagram

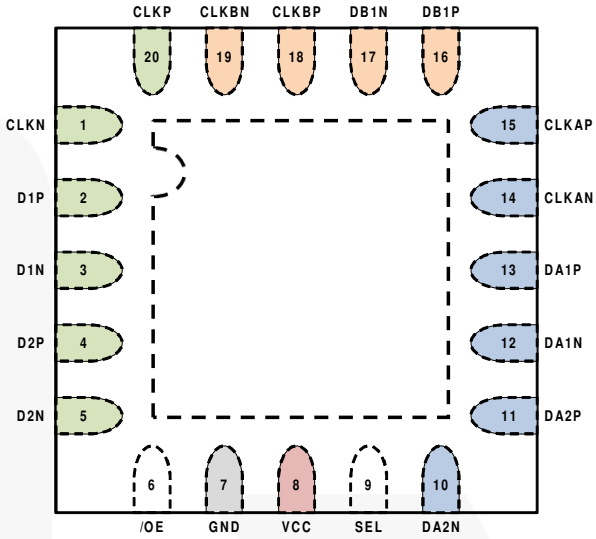

Figure 3. Pin Assignments (Top Through View)

Pin Descriptions

Pin #	Pin Name	Type	Description	
20	CLKP	I/O	Common positive clock path	
1	CLKN	I/O	Common negative clock path	
2	D1P	I/O	Common positive data 1 path	
3	D1N	I/O	Common negative data 1 path	
4	D2P	I/O	Common positive data 2 path	
5	D2N	I/O	Common negative data 2 path	
15	CLKAP	I/O	A-port positive clock path	
14	CLKAN	I/O	A-port negative clock path	
13	DA1P	I/O	A-port positive data 1 path	
12	DA1N	I/O	A-port negative data 1 path	
11	DA2P	I/O	A-port positive data 2 path	
10	DA2N	I/O	A-port negative data 2 path	
18	CLKBP	I/O	B-port positive clock path	
19	CLKBN	I/O	B-port negative clock path	
16	DB1P	I/O	B-port positive data 1 path	
17	DB1N	I/O	B-port negative data 1 path	
6	/OE	Input	Output Enable (Active Low)	
7	GND	Ground	Ground	
8	VCC	Supply	Power; 0.1 µF decoupling capacitor to ground recommended	
9	SEL	Input	A-port or B-port Select pin	0=A-port, 1= B-port
Paddle	n/a	NC	Not Connected	

Truth Table

SEL	/OE	Function
Don't Care	HIGH	Disconnect
LOW	LOW	D1, D2, CLK=DA1, DA2, CLKA
HIGH	LOW	D1, CLK=DB1, CLKB; D2 OPEN

© 2010 Fairchild Semiconductor Corporation

Absolute Maximum Ratings

Stresses exceeding the absolute maximum ratings may damage the device. The device may not function or be operable above the recommended operating conditions and stressing the parts to these levels is not recommended. In addition, extended exposure to stresses above the recommended operating conditions may affect device reliability. The absolute maximum ratings are stress ratings only.

Symbol	Parameter		Min.	Max.	Unit
V_{CC}	Supply Voltage		-0.50	+5.25	V
V_{CNTRL}	DC Input Voltage (SEL, /OE)[1]		-0.5	V_{CC}	V
V_{SW}	DC Switch I/O Voltage[1]		-0.5	V_{CC} + 0.3	V
I_{IK}	DC Input Diode Current		-50		mA
I_{OUT}	DC Output Current			50	mA
T_{STG}	Storage Temperature		-65	+150	°C
ESD	Human Body Model, JEDEC: JESD22-A114	All Pins		6.5	kV
		I/O to GND		8.0	
		Power to GND		16.0	
	Charged Device Model, JEDEC: JESD22-C101			2.0	

Note:

1. The input and output negative ratings may be exceeded if the input and output diode current ratings are observed.

Recommended Operating Conditions

The Recommended Operating Conditions table defines the conditions for actual device operation. Recommended operating conditions are specified to ensure optimal performance to the datasheet specifications. Fairchild does not recommend exceeding them or designing to Absolute Maximum Ratings.

Symbol	Parameter	Min.	Max.	Unit
V_{CC}	Supply Voltage	2.65	4.30	V
V_{CNTRL}	Control Input Voltage (SEL, /OE)[2]	0	V_{CC}	V
V_{SW}	Switch I/O Voltage	-0.5	V_{CC}-1 V	V
T_A	Operating Temperature	-40	+85	°C

Note:

2. The control input must be held HIGH or LOW; it must not float.

© 2010 Fairchild Semiconductor Corporation

DC Electrical Characteristics

All typical values are T_A=25°C unless otherwise specified.

Symbol	Parameter	Conditions	V_{CC} (V)	T_A=-40 to +85ºC			Units
				Min.	Typ.	Max.	
V_{IK}	Clamp Diode Voltage	I_{IN}=-18 mA	2.775			-1.2	V
I_{IN}	Control Input Leakage	V_{SW}=0 to 4.3 V	4.3	-1		1	µA
V_{IH}	Input Voltage High	V_{IN}=0 to V_{CC}	2.650 to 2.775	1.3			V
			4.3	1.7			
V_{IL}	Input Voltage Low	V_{IN}=0 to V_{CC}	2.650 to 2.775			0.5	V
I_{OZ}	Off-State Leakage	A, B=0+0.3 V to V_{CC}-0.3	4.3	-2		2	µA
I_{CC}	Quiescent Supply Current	V_{CNTRL}=0 or V_{CC}, I_{OUT}=0	4.3			1.0	µA
I_{CCT}	Increase in I_{CC} Current Per Control Voltage and V_{CC}	V_{CNTRL}=1.8 V	2.775			1.5	µA

DC Electrical Characteristics, Low-Speed Mode

All typical values are T_A=25°C unless otherwise specified.

Symbol	Parameter	Conditions	V_{CC} (V)	T_A=-40 to +85ºC			Units
				Min.	Typ.	Max.	
R_{ON}	LS Switch On Resistance[3]	V_{SW}=1.2 V, I_{ON}=-10 mA, Figure 4	2.65		10	14	Ω
ΔR_{ON}	LS Delta R_{ON}[4]	V_{SW}=1.2 V, I_{ON}=-10 mA (Intra-pair)	2.65		0.75		Ω

Notes:

3. Measured by the voltage drop between A/B and CLK/Dn pins at the indicated current through the switch.
4. Guaranteed by characterization.

DC Electrical Characteristics, High-Speed Mode

All typical values are T_A=25°C unless otherwise specified.

Symbol	Parameter	Conditions	V_{CC} (V)	T_A=-40 to +85ºC			Units
				Min.	Typ.	Max.	
R_{ON}	HS Switch On Resistance[5]	V_{SW}=0.4 V, I_{ON}=-10 mA, Figure 4	2.65		7.0	9.5	Ω
ΔR_{ON}	HS Delta R_{ON}[6]	V_{SW}=0.4 V, I_{ON}=-10 mA (Intra-pair)	2.65		0.75		Ω

Notes:

5. Measured by the voltage drop between A, B, and Dn pins at the indicated current through the switch.
6. Guaranteed by characterization.

© 2010 Fairchild Semiconductor Corporation

AC Electrical Characteristics

All values are at R_L=50 Ω and R_S=50 Ω and all typical values are V_{CC}=2.775 V at T_A=25°C unless otherwise specified.

Symbol	Parameter	Conditions	V_{CC} (V)	T_A=-40ºC to +85ºC			Units
				Min.	Typ.	Max.	
O_{IRR}	Off Isolation[7]	f=100 MHz, R_T=50 Ω Figure 14	2.775		-50		dB
Xtalk	Non-Adjacent Channel Crosstalk[7]	f=100 MHz, R_T=50 Ω Figure 15	2.775		-40		dB
BW	-3db Bandwidth[7]	C_L=0 pF, R_T=50 Ω Figure 13	2.775		1.0		GHz
t_{ON}	Turn-On Time SEL, /OE to Output	C_L=5 pF, V_{SW}=1.2 V Figure 6, Figure 7	2.650 to 2.775		20	37	ns
t_{OFF}	Turn-Off Time SEL, /OE to Output	C_L=5 pF, V_{SW}=1.2 V Figure 6, Figure 7	2.650 to 2.775		15	27	ns
t_{PD}	Propagation Delay[7]	C_L=5 pF Figure 6, Figure 8	2.775		0.25		ns
t_{BBM}	Break-Before-Make Time	C_L=5 pF, V_{SW1}=V_{SW2}=1.2 V Figure 12	2.650 to 2.775	7	9	12	ns

Note:

7. Guaranteed by characterization.

AC Electrical Characteristics, High-Speed

All typical values are V_{CC}=2.775 V at T_A=25°C unless otherwise specified.

Symbol	Parameter	Conditions	T_A=-40ºC to +85ºC			Units
			Min.	Typ.	Max.	
$t_{SK(Part_Part)}$	Channel-to-Channel Skew Across Multiple Parts[8,9]	TDR-Based Method (V_{SW}-0.2V_{PP},C_L=C_{ON})		40	80	ps
$t_{SK(Chl_Chl)}$	Channel-to-Channel Skew Within a Single Part[8]	TDR-Based Method (V_{SW}-0.2V_{PP},C_L=C_{ON})		15	30	ps
$t_{SK(Pulse)}$	Skew of Opposite Transitions in the Same Differential Channel[8]	TDR-Based Method (V_{SW}-0.2V_{PP},C_L=C_{ON})		10	20	ps

Notes:

8. Guaranteed by characterization.
9. Assumes the same V_{CC} and temperature for all devices.

Capacitance

Symbol	Parameter	Conditions	T_A=-40ºC to +85ºC			Units
			Min.	Typ.	Max.	
C_{IN}	Control Pin Input Capacitance[10]	V_{CC}=0 V		1.5		pF
C_{ON}	Dn/CLK- On Capacitance[10]	V_{CC}=2.775 V, /OE=0V, f=1 MHz Figure 11		8.0		
C_{OFF}	Dn/CLK Off Capacitance[9]	V_{CC}=2.775 V, /OE=2.775 V, f=1 MHz Figure 10		2.5		

Note:

10. Guaranteed by characterization.

© 2010 Fairchild Semiconductor Corporation

Test Diagrams

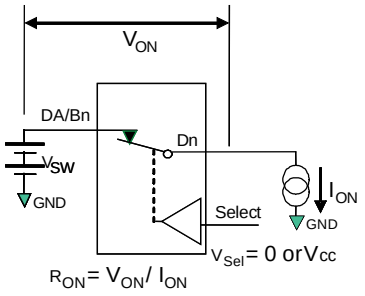

Figure 4. On Resistance

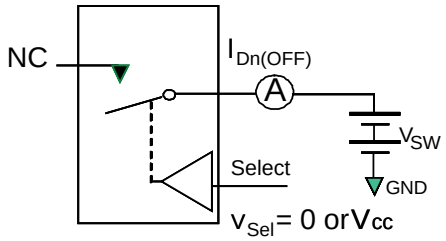

**Each switch port is tested separately

Figure 5. Off Leakage

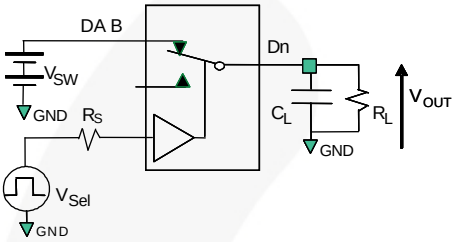

R_L, R_S, an C_L ar fu ctions of th ap lication environment (se AC Tables for spe ific v lues)
C_L inclu es test fixture an stra capacitance

Figure 6. AC Test Circuit Load

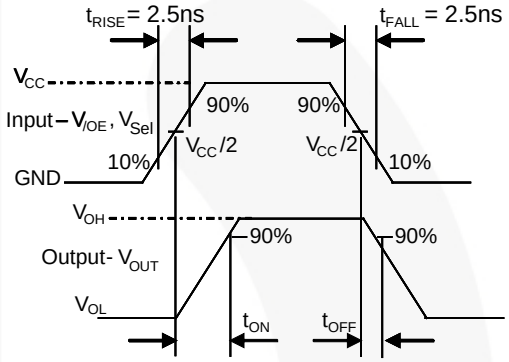

Figure 7. Turn-On / Turn-Off Waveforms

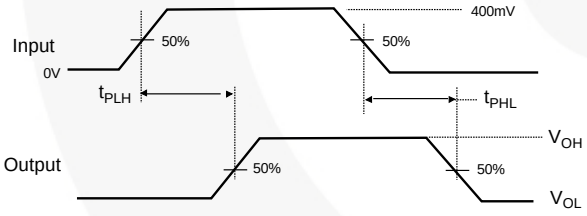

Figure 8. Propagation Delay ($t_R t_F$ – 500 ps)

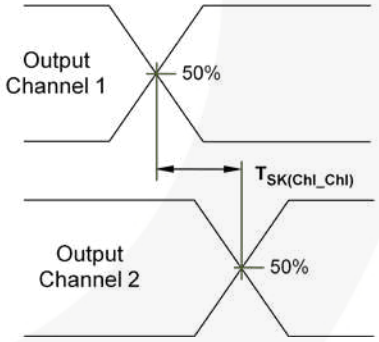

Figure 9. Channel-to-Channel Skew

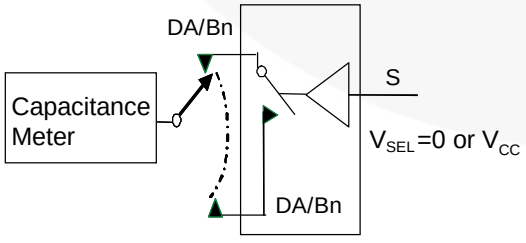

Figure 10. Channel Off Capacitance

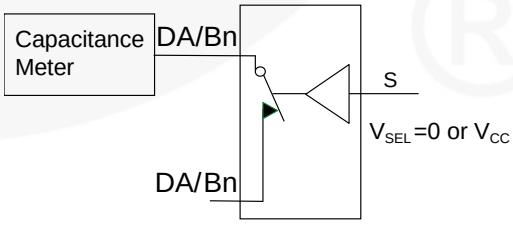

Figure 11. Channel On Capacitance

© 2010 Fairchild Semiconductor Corporation

Test Diagrams (Continued)

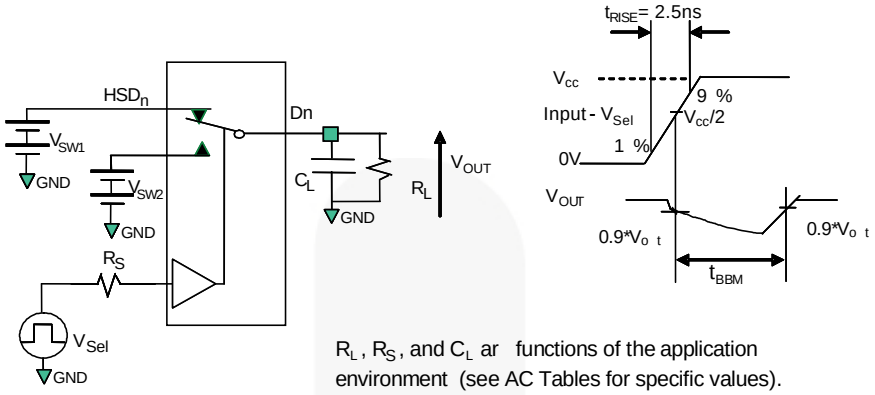

R_L, R_S, and C_L ar functions of the application environment (see AC Tables for specific values). C_L includes test fixture and stray capacitance.

Figure 12. Break-Before-Make Interval Timing

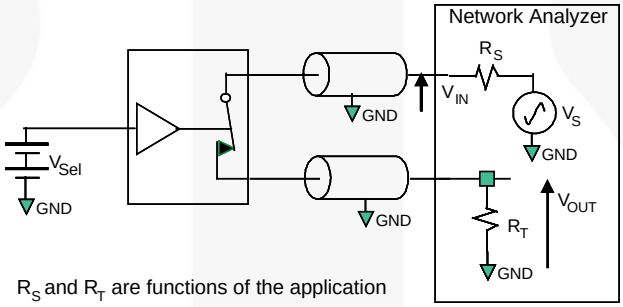

R_S and R_T are functions of the application environment (see AC Tables for specific values).

Figure 13. Bandwidth

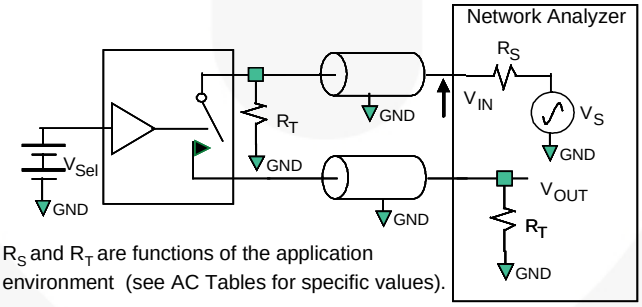

R_S and R_T are functions of the application environment (see AC Tables for specific values).

Off isolation = 20 Log (V_{OUT} / V_{IN})

Figure 14. Channel Off Isolation

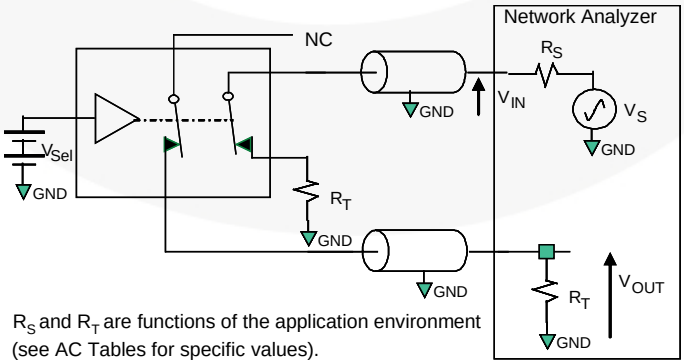

R_S and R_T are functions of the application environment (see AC Tables for specific values).

Crosstalk = 20 Log (V_{OUT} / V_{IN})

Figure 15. Non-Adjacent Channel-to-Channel Crosstalk

© 2010 Fairchild Semiconductor Corporation

Physical Dimensions

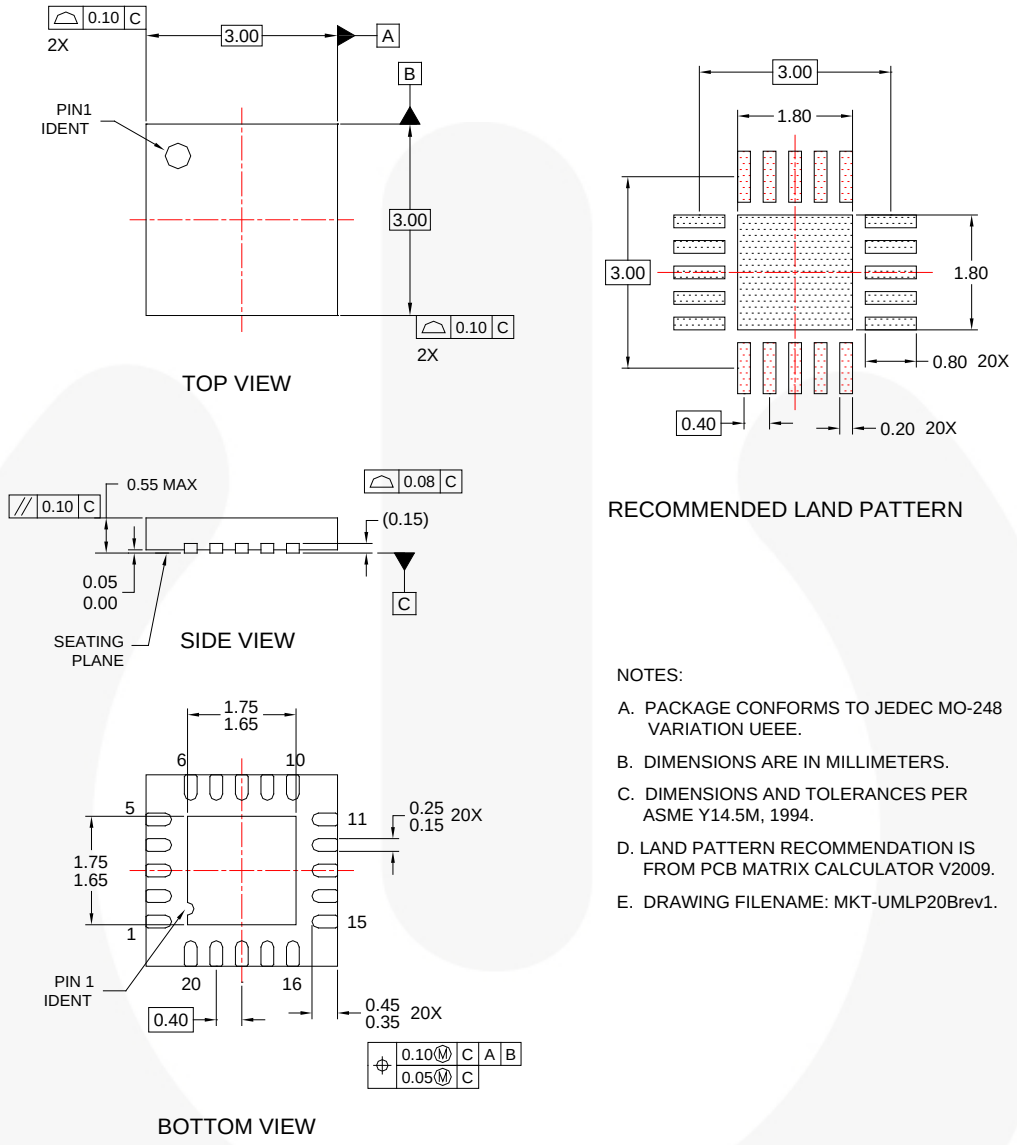

NOTES:

A. PACKAGE CONFORMS TO JEDEC MO-248 VARIATION UEEE.

B. DIMENSIONS ARE IN MILLIMETERS.

C. DIMENSIONS AND TOLERANCES PER ASME Y14.5M, 1994.

D. LAND PATTERN RECOMMENDATION IS FROM PCB MATRIX CALCULATOR V2009.

E. DRAWING FILENAME: MKT-UMLP20Brev1.

Figure 16. 20-Lead, Quad, Ultrathin Molded Leadless Package (UMLP), 3.0 x 3.0 mm

Package drawings are provided as a service to customers considering Fairchild components. Drawings may change in any manner without notice. Please note the revision and/or date on the drawing and contact a Fairchild Semiconductor representative to verify or obtain the most recent revision. Package specifications do not expand the terms of Fairchild's worldwide terms and conditions, specifically the warranty therein, which covers Fairchild products.

Always visit Fairchild Semiconductor's online packaging area for the most recent package drawings:
http://www.fairchildsemi.com/dwg/UM/UMLP20B.pdf.

For current tape and reel specifications, visit Fairchild Semiconductor's online packaging area:
http://www.fairchildsemi.com/packaging/3.0x3.0_UMLP_Pack_TNR_Spec.pdf.

© 2010 Fairchild Semiconductor Corporation

TRADEMARKS

The following includes registered and unregistered trademarks and service marks, owned by Fairchild Semiconductor and/or its global subsidiaries, and is not intended to be an exhaustive list of all such trademarks.

AccuPower™
AX-CAP®*
BitSiC™
Build it Now™
CorePLUS™
CorePOWER™
CROSSVOLT™
CTL™
Current Transfer Logic™
DEUXPEED®
Dual Cool™
EcoSPARK®
EfficientMax™
ESBC™
Fairchild®
Fairchild Semiconductor®
FACT Quiet Series™
FACT®
FAST®
FastvCore™
FETBench™
FPS™
F-PFS™
FRFET®
Global Power Resource℠
GreenBridge™
Green FPS™
Green FPS™ e-Series™
Gmax™
GTO™
IntelliMAX™
ISOPLANAR™
Making Small Speakers Sound Louder and Better™
MegaBuck™
MICROCOUPLER™
MicroFET™
MicroPak™
MicroPak2™
MillerDrive™
MotionMax™
mWSaver®
OptoHiT™
OPTOLOGIC®
OPTOPLANAR®
PowerTrench®
PowerXS™
Programmable Active Droop™
QFET®
QS™
Quiet Series™
RapidConfigure™
Saving our world, 1mW/W/kW at a time™
SignalWise™
SmartMax™
SMART START™
Solutions for Your Success™
SPM®
STEALTH™
SuperFET®
SuperSOT™-3
SuperSOT™-6
SuperSOT™-8
SupreMOS®
SyncFET™
Sync-Lock™
SYSTEM GENERAL®*
TinyBoost®
TinyBuck®
TinyCalc™
TinyLogic®
TINYOPTO™
TinyPower™
TinyPWM™
TinyWire™
TranSiC™
TriFault Detect™
TRUECURRENT®*
μSerDes™
SerDes
UHC®
Ultra FRFET™
UniFET™
VCX™
VisualMax™
VoltagePlus™
XS™
仙童™

* Trademarks of System General Corporation, used under license by Fairchild Semiconductor.

DISCLAIMER

FAIRCHILD SEMICONDUCTOR RESERVES THE RIGHT TO MAKE CHANGES WITHOUT FURTHER NOTICE TO ANY PRODUCTS HEREIN TO IMPROVE RELIABILITY, FUNCTION, OR DESIGN. FAIRCHILD DOES NOT ASSUME ANY LIABILITY ARISING OUT OF THE APPLICATION OR USE OF ANY PRODUCT OR CIRCUIT DESCRIBED HEREIN; NEITHER DOES IT CONVEY ANY LICENSE UNDER ITS PATENT RIGHTS, NOR THE RIGHTS OF OTHERS. THESE SPECIFICATIONS DO NOT EXPAND THE TERMS OF FAIRCHILD'S WORLDWIDE TERMS AND CONDITIONS, SPECIFICALLY THE WARRANTY THEREIN, WHICH COVERS THESE PRODUCTS.

LIFE SUPPORT POLICY

FAIRCHILD'S PRODUCTS ARE NOT AUTHORIZED FOR USE AS CRITICAL COMPONENTS IN LIFE SUPPORT DEVICES OR SYSTEMS WITHOUT THE EXPRESS WRITTEN APPROVAL OF FAIRCHILD SEMICONDUCTOR CORPORATION.

As used herein:

1. Life support devices or systems are devices or systems which, (a) are intended for surgical implant into the body or (b) support or sustain life, and (c) whose failure to perform when properly used in accordance with instructions for use provided in the labeling, can be reasonably expected to result in a significant injury of the user.
2. A critical component in any component of a life support, device, or system whose failure to perform can be reasonably expected to cause the failure of the life support device or system, or to affect its safety or effectiveness.

ANTI-COUNTERFEITING POLICY

Fairchild Semiconductor Corporation's Anti-Counterfeiting Policy. Fairchild's Anti-Counterfeiting Policy is also stated on our external website, www.fairchildsemi.com, under Sales Support.

Counterfeiting of semiconductor parts is a growing problem in the industry. All manufacturers of semiconductor products are experiencing counterfeiting of their parts. Customers who inadvertently purchase counterfeit parts experience many problems such as loss of brand reputation, substandard performance, failed applications, and increased cost of production and manufacturing delays. Fairchild is taking strong measures to protect ourselves and our customers from the proliferation of counterfeit parts. Fairchild strongly encourages customers to purchase Fairchild parts either directly from Fairchild or from Authorized Fairchild Distributors who are listed by country on our web page cited above. Products customers buy either from Fairchild directly or from Authorized Fairchild Distributors are genuine parts, have full traceability, meet Fairchild's quality standards for handling and storage and provide access to Fairchild's full range of up-to-date technical and product information. Fairchild and our Authorized Distributors will stand behind all warranties and will appropriately address any warranty issues that may arise. Fairchild will not provide any warranty coverage or other assistance for parts bought from Unauthorized Sources. Fairchild is committed to combat this global problem and encourage our customers to do their part in stopping this practice by buying direct or from authorized distributors.

PRODUCT STATUS DEFINITIONS

Definition of Terms

Datasheet Identification	Product Status	Definition
Advance Information	Formative / In Design	Datasheet contains the design specifications for product development. Specifications may change in any manner without notice.
Preliminary	First Production	Datasheet contains preliminary data; supplementary data will be published at a later date. Fairchild Semiconductor reserves the right to make changes at any time without notice to improve design.
No Identification Needed	Full Production	Datasheet contains final specifications. Fairchild Semiconductor reserves the right to make changes at any time without notice to improve the design.
Obsolete	Not In Production	Datasheet contains specifications on a product that is discontinued by Fairchild Semiconductor. The datasheet is for reference information only.

Rev. I68

© 2010 Fairchild Semiconductor Corporation

ON Semiconductor and ON are trademarks of Semiconductor Components Industries, LLC dba ON Semiconductor or its subsidiaries in the United States and/or other countries. ON Semiconductor owns the rights to a number of patents, trademarks, copyrights, trade secrets, and other intellectual property. A listing of ON Semiconductor's product/patent coverage may be accessed at www.onsemi.com/site/pdf/Patent−Marking.pdf. ON Semiconductor reserves the right to make changes without further notice to any products herein. ON Semiconductor makes no warranty, representation or guarantee regarding the suitability of its products for any particular purpose, nor does ON Semiconductor assume any liability arising out of the application or use of any product or circuit, and specifically disclaims any and all liability, including without limitation special, consequential or incidental damages. Buyer is responsible for its products and applications using ON Semiconductor products, including compliance with all laws, regulations and safety requirements or standards, regardless of any support or applications information provided by ON Semiconductor. "Typical" parameters which may be provided in ON Semiconductor data sheets and/or specifications can and do vary in different applications and actual performance may vary over time. All operating parameters, including "Typicals" must be validated for each customer application by customer's technical experts. ON Semiconductor does not convey any license under its patent rights nor the rights of others. ON Semiconductor products are not designed, intended, or authorized for use as a critical component in life support systems or any FDA Class 3 medical devices or medical devices with a same or similar classification in a foreign jurisdiction or any devices intended for implantation in the human body. Should Buyer purchase or use ON Semiconductor products for any such unintended or unauthorized application, Buyer shall indemnify and hold ON Semiconductor and its officers, employees, subsidiaries, affiliates, and distributors harmless against all claims, costs, damages, and expenses, and reasonable attorney fees arising out of, directly or indirectly, any claim of personal injury or death associated with such unintended or unauthorized use, even if such claim alleges that ON Semiconductor was negligent regarding the design or manufacture of the part. ON Semiconductor is an Equal Opportunity/Affirmative Action Employer. This literature is subject to all applicable copyright laws and is not for resale in any manner.

PUBLICATION ORDERING INFORMATION

LITERATURE FULFILLMENT:
Literature Distribution Center for ON Semiconductor
19521 E. 32nd Pkwy, Aurora, Colorado 80011 USA
Phone: 303−675−2175 or 800−344−3860 Toll Free USA/Canada
Fax: 303−675−2176 or 800−344−3867 Toll Free USA/Canada
Email: orderlit@onsemi.com

N. American Technical Support: 800−282−9855 Toll Free USA/Canada
Europe, Middle East and Africa Technical Support:
Phone: 421 33 790 2910
Japan Customer Focus Center
Phone: 81−3−5817−1050

ON Semiconductor Website: **www.onsemi.com**

Order Literature: http://www.onsemi.com/orderlit

For additional information, please contact your local Sales Representative