

Is Now Part of



ON Semiconductor®

To learn more about ON Semiconductor, please visit our website at
www.onsemi.com

Please note: As part of the Fairchild Semiconductor integration, some of the Fairchild orderable part numbers will need to change in order to meet ON Semiconductor's system requirements. Since the ON Semiconductor product management systems do not have the ability to manage part nomenclature that utilizes an underscore (_), the underscore (_) in the Fairchild part numbers will be changed to a dash (-). This document may contain device numbers with an underscore (_). Please check the ON Semiconductor website to verify the updated device numbers. The most current and up-to-date ordering information can be found at www.onsemi.com. Please email any questions regarding the system integration to Fairchild_questions@onsemi.com.

ON Semiconductor and the ON Semiconductor logo are trademarks of Semiconductor Components Industries, LLC dba ON Semiconductor or its subsidiaries in the United States and/or other countries. ON Semiconductor owns the rights to a number of patents, trademarks, copyrights, trade secrets, and other intellectual property. A listing of ON Semiconductor's product/patent coverage may be accessed at www.onsemi.com/site/pdf/Patent-Marking.pdf. ON Semiconductor reserves the right to make changes without further notice to any products herein. ON Semiconductor makes no warranty, representation or guarantee regarding the suitability of its products for any particular purpose, nor does ON Semiconductor assume any liability arising out of the application or use of any product or circuit, and specifically disclaims any and all liability, including without limitation special, consequential or incidental damages. Buyer is responsible for its products and applications using ON Semiconductor products, including compliance with all laws, regulations and safety requirements or standards, regardless of any support or applications information provided by ON Semiconductor. "Typical" parameters which may be provided in ON Semiconductor data sheets and/or specifications can and do vary in different applications and actual performance may vary over time. All operating parameters, including "Typicals" must be validated for each customer application by customer's technical experts. ON Semiconductor does not convey any license under its patent rights nor the rights of others. ON Semiconductor products are not designed, intended, or authorized for use as a critical component in life support systems or any FDA Class 3 medical devices or medical devices with a same or similar classification in a foreign jurisdiction or any devices intended for implantation in the human body. Should Buyer purchase or use ON Semiconductor products for any such unintended or unauthorized application, Buyer shall indemnify and hold ON Semiconductor and its officers, employees, subsidiaries, affiliates, and distributors harmless against all claims, costs, damages, and expenses, and reasonable attorney fees arising out of, directly or indirectly, any claim of personal injury or death associated with such unintended or unauthorized use, even if such claim alleges that ON Semiconductor was negligent regarding the design or manufacture of the part. ON Semiconductor is an Equal Opportunity/Affirmative Action Employer. This literature is subject to all applicable copyright laws and is not for resale in any manner.

FAIRCHILD SEMICONDUCTOR®

June 2012

FSA201 — USB2.0 Full-Speed and Audio Switches with Negative Signal Capability

Features

- 3Ω Typical ON Resistance
- -3db Bandwidth: > 250MHz
- Low Power Consumption
- Packaged in Pb-free 10-pin MSOP and 10-Lead MicroPak™ (1.6 x 2.1mm)
- Power-off Protection on Common D+/R, D-/L Ports
- Automatically Detects V_{BUS} for Switch Path Selection

Applications

- Cell Phone, PDA, Digital Camera, and Notebook
- LCD Monitor, TV, and Set-Top Box

Description

The FSA201 is a Double-Pole, Double Throw (DPDT) multiplexer that combines a low-distortion audio and a USB2.0 Full-Speed (FS) switch path. This configuration enables audio and USB data to share a common connector port. The architecture is designed to allow audio signals to swing below ground. This means a common USB and headphone jack can be used for personal media players and similar portable peripheral devices.

Since USB2.0 is an industry standard for shared data-path in portable devices, the FSA201 also incorporates a V_{BUS} detection capability. The FSA201 includes a power-off feature to minimize current consumption when V_{BUS} is not present. This power-off circuitry is available for the common D+/R, D-/L ports only. Typical applications involve switching in portables and consumer applications, such as cell phones, digital cameras, and notebooks with hubs or controllers.

Ordering Information

Part Number	Package Number	Packing Description
FSA201L10X	MAC010A	10-Lead MicroPak, JEDEC MO-255, 1.6 x 2.1mm
FSA201MUX	MUA10A	10-Lead MSOP, JEDEC MO-187, 3.0mm Wide

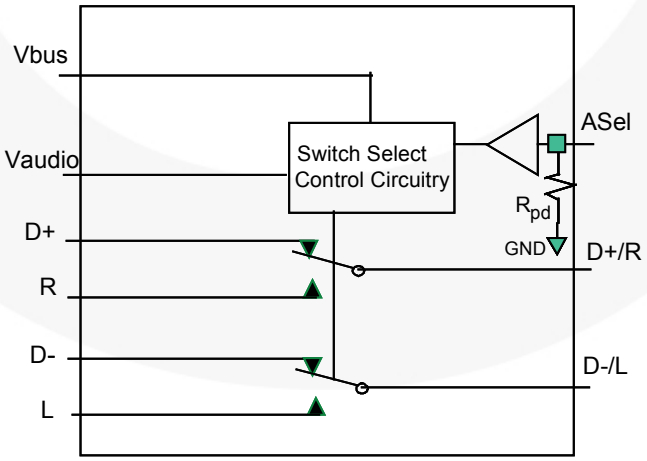

Figure 1. FSA201 Analog Symbol

© 2006 Fairchild Semiconductor Corporation

Pin Assignments

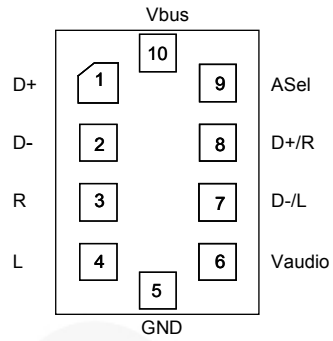

Figure 2. MicroPak™ 10-Pin

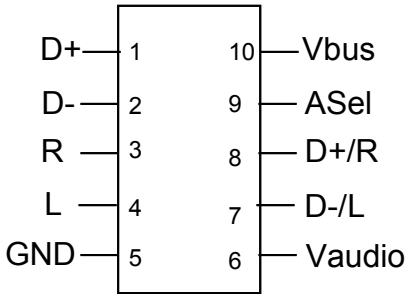

Figure 3. MSOP 10-Pin

Pin Descriptions

Pin #	Name	Description
1, 2	D+, D-	USB data bus input sources
6	V_{AUDIO}	Power supply (audio)
3, 4	R, L	Audio right and left input sources
9	A_{SEL}	Audio select to override auto USB detect when V_{AUDIO} supply is present
10	V_{BUS}	Power supply (USB) and auto USB switch-path select
8, 7	D+/R, D-/L	USB and audio common connector ports

Truth Table

A_{SEL} (1)	V_{AUDIO}	V_{BUS}	L, R	D+, D-
LOW	LOW	LOW	OFF	OFF
LOW	LOW	High (2)	OFF	ON
LOW	HIGH (2)	LOW	ON	OFF
LOW	HIGH (2)	HIGH (2)	OFF	ON
HIGH	LOW	LOW	OFF	OFF
HIGH	LOW	HIGH (2)	OFF	ON
HIGH	HIGH (2)	LOW	ON	OFF
HIGH	HIGH (2)	HIGH (2)	ON	OFF

Notes:

1. A_{SEL}- Internal resistor to GND provides auto-V_{BUS} detect if there is no external connection. Forcing A_{SEL} HIGH when V_{AUDIO} is present overrides the USB path even if V_{BUS} is present.
2. H - Value is the threshold as defined to meet USB2.0 V_{BUS} requirements and audio supply threshold in a system (see DC Tables).

© 2006 Fairchild Semiconductor Corporation

Functional Description

The FSA201 is a combined USB and audio switch that enables sharing the D+/D- lines of a USB connector with stereo audio CODEC outputs. The switch is optimized for full-speed USB signals and includes an automatic V_{BUS}-detection circuit. When a USB connector, rather than a headphone, is connected to the ultra-portable device the switch is automatically configured for full-speed USB data transfer. If no V_{BUS} is detected, and yet V_{AUDIO} is present, the switch is configured for the low-distortion audio switch path. The audio switch path also handles negative signals (down to -2V), which eliminates the need for large coupling capacitors.

For those applications where the V_{BUS} is generated as a self-powered device or where V_{BUS} is not removed, the A_{SEL} pin provides the ability to switch, under software control, to the audio path. The A_{SEL} pin is internally terminated by a resistor to GND (typical value 3MΩ) and requires no connection for the standard ultra-portable (cell-phone, MP3, or Portable Media Player). In an application where the supply to the FSA201 V_{BUS} pin is not guaranteed to be removed, a GPIO pin can be used to switch out of full-speed USB mode into audio mode, using the A_{SEL} pin.

The FSA201 V_{BUS} pin must be connected directly to V_{BUS} or a supply > 3.8V, not an LDO regulated down to 3.6V or a V_{bat}-generated supply that may fall below 3.8V in normal operation (see the Application Diagram).

Application Diagram

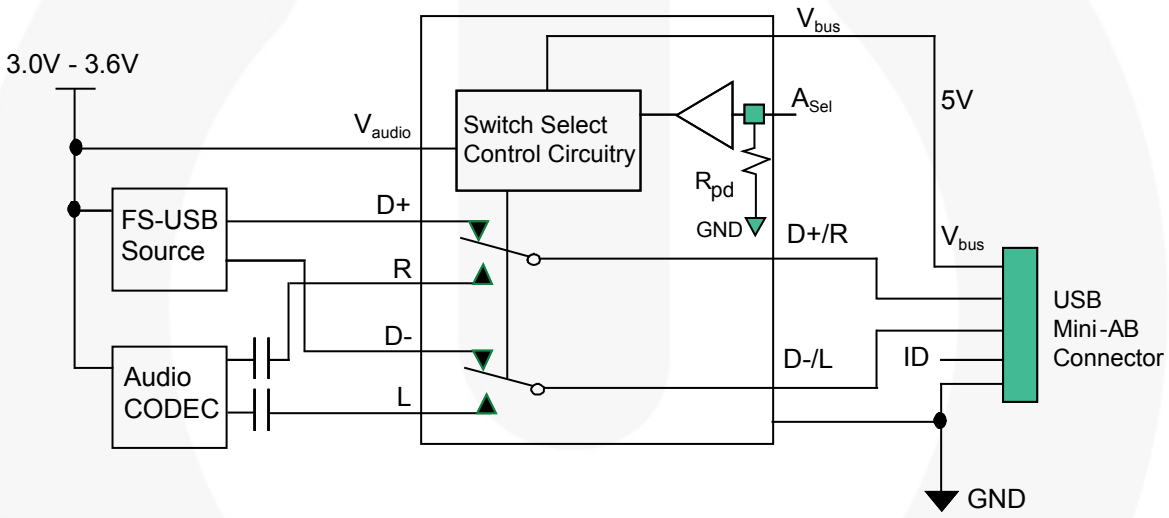

Figure 4. Application Diagram

Absolute Maximum Ratings

Stresses exceeding the absolute maximum ratings may damage the device. The device may not function or be operable above the recommended operating conditions and stressing the parts to these levels is not recommended. In addition, extended exposure to stresses above the recommended operating conditions may affect device reliability. The absolute maximum ratings are stress ratings only.

Symbol	Parameter		Min.	Max.	Unit
V_{AUDIO} / V_{Bus}	Supply Voltage		-0.5	6.0	V
V_{SW}	Switch I/O Voltage[3]	D+, D-, D+/R, D-/L Pins	V_{BUS} -7.0	V_{BUS} +0.3	V
		R, L, Pins	V_{AUDIO} -7.0	V_{AUDIO} -0.3	V
A_{SEL}	Control Input Voltage		-0.5	6.0	V
I_{IK}	Input Clamp Diode Current		-50		mA
I_{SW}	Switch I/O Current (Continuous)	USB		50	mA
		Audio		250	
I_{SWPEAK}	Peak Switch Current (Pulsed at 1ms Duration, <10% Duty Cycle)	USB		100	mA
		Audio		500	
T_{STG}	Storage Temperature Range		-65	+150	°C
T_J	Maximum Junction Temperature			+150	°C
T_L	Lead Temperature (Soldering, 10 seconds)			+260	°C
ESD	Human Body Model (JEDEC: JESD22-A114)	I/O to GND		10	kV
		All Other Pins		8	
	Charged Discharge Model (JEDEC: JESD22-C101)			2	

Note:

3. The input and output negative ratings may be exceeded if the input and output diode current ratings are observed.

Recommended Operating Conditions

The Recommended Operating Conditions table defines the conditions for actual device operation. Recommended operating conditions are specified to ensure optimal performance to the datasheet specifications. Fairchild does not recommend exceeding them or designing to Absolute Maximum Ratings.

Symbol	Parameter		Minimum	Maximum
V_{AUDIO}	Supply Voltage		2.7V	3.6V
V_{BUS}	Supply Voltage		4.25V	5.50V
A_{SEL}	Control Input Voltage		0V	V_{AUDIO}
V_{SW}	Switch I/O Voltage		V_{AUDIO}– 6.5V	V_{AUDIO}– 0.3V
T_A	Operating Temperature		-40°C	85°C
θ_{JA}	Thermal Resistance (free air)	MicroPak 10		330ºC / W (estimated)

© 2006 Fairchild Semiconductor Corporation

DC Electrical Characteristics

All typical values are at 25ºC unless otherwise specified.

Symbol	Parameter	V_{AUDIO} (V)	Condition	T_A=- 40ºC to +85ºC			Unit
				Min.	Typ.	Max.	
Common Pins							
V_{IK}	Clamp Diode Voltage	2.7	I_{IK}=-18mA			-1.2	V
V_{IH}	Control Input Voltage HIGH	2.7 to 3.6		1.3			
V_{IL}	Control Input Voltage LOW	2.7 to 3.6				0.5	
I_{IN}	A_{SEL} Input HIGH Current	3.6	V_{CNTRL}=0V to 3.6V	-3		3	µA
I_{OFF}	Power Off Leakage Current (Common Port Only D+/R, D-/L)	V_{AUDIO}= V_{BUS}=0V	Common Port (D+/R, D-/L) V_{SW}=0V to 5.5V			1	µA
$I_{NO(0FF)}$	Off Leakage Current of Port D+, D-, R, L	3.6	V_{BUS}=0V, 5. 5V D+/R, D-/L=0.3V, V_{AUDIO} – 0.3V D+, D-, R, L=0.3V, V_{AUDIO} – 0.3V or Floating Figure 14	-50	10	50	nA
$I_{NC(0N)}$	On Leakage Current of Port D+/R or D-/L	3.6	V_{BUS}=0V, 5.5V D+/R, D-/L=0.3V, V_{AUDIO} – 0.3V, D+, D-, R, L=Floating Figure 15	-100	50	100	nA
USB Switch Path		**V_{BUS} (V)**					
	USB Analog Signal Range			0		3.6	V
R_{ONUSB}	FS Switch On Resistance(4)	4.25	$V_{D+/D-}$=0V, 3.0V, I_{ON}=-8mA Figure 6, Figure 13		3	6	Ω
ΔR_{ONUSB}	FS Delta R_{ON}(4,6)	4.25	$V_{D+/D-}$=3V, I_{ON}=-8mA		0.35		Ω
Audio Switch Path		**V_{AUDIO} (V)**					
	Audio Analog Signal Range			V_{AUDIO} – 6.5		V_{AUDIO}	V
$R_{ONAUDIO}$	Audio Switch On Resistance(7)	2.7	$V_{L/R}$=-2V, 0V, 0.7V, V_{AUDIO}-0.7V, V_{AUDIO} I_{ON}=-100mA, V_{BUS}=0V Figure 5, Figure 13		0.5	1.0	Ω
$\Delta R_{ONAudio}$	Audio Delta R_{ON}(4)	2.7	$V_{L/R}$=0.7V I_{ON}=-100mA		0.01	0.10	Ω
$R_{FLAT(Audio)}$	Audio R_{ON} Flatness(5)	2.7	$V_{L/R}$=-2V, 0V, 0.7V, 2V, 2.7V I_{ON}=-100mA			0.35	Ω

Notes:

4. $\Delta R_{ON}=R_{ON\ max}-R_{ON\ min}$ measured at identical V_{CC}, temperature, and voltage. Worst-case signal path, audio or USB channel, is characterized.
5. Flatness is defined as the difference between the maximum and minimum values of on resistance over the specified range of conditions.
6. Guaranteed by characterization, not production tested.
7. On resistance is determined by the voltage drop between the A and B pins at the indicated current through the switch.

© 2006 Fairchild Semiconductor Corporation

DC Electrical Characteristics (Continued)

All typical values are at 25ºC unless otherwise specified.

Symbol	Parameter	V_{AUDIO} (V)	Condition	T_A=- 40ºC to +85ºC			Unit
				Min.	Typ.	Max.	
Power Supply							
V_{busth}	V_{BUS} Threshold Voltage			3.2		3.8	V
$V_{audioth}$	V_{AUDIO} Threshold			0.5		1.5	V
$I_{CC(Audio)}$	Quiescent Supply Current (Audio)	3.0	V_{ASEL}=0 to V_{AUDIO}, I_{OUT}=0			10	µA
$I_{CC(VBUS)}$	Quiescent Supply Current (V_{BUS})		V_{ASEL}=0 to V_{AUDIO}, I_{OUT}=0 V_{BUS}=5.5V			20	µA
I_{CCT}	Increase in I_{CC} Current per Control Voltage and V_{CC}	3.0	V_{ASEL}=2.6V, V_{BUS}=Floating			15	µA
			V_{ASEL}=1.8V, V_{BUS}=Floating			18	

© 2006 Fairchild Semiconductor Corporation

AC Electrical Characteristics

All typical value are for V_{AUDIO}=3.3V and V_{BUS}=5.0 at 25ºC unless otherwise specified.

Symbol	Parameter	V_{AUDIO}/V_{BUS} (V)	Condition	T_A=- 40°C to +85°C			Unit
				Min.	Typ.	Max.	
$t_{ONAUDIO1}$	Turn-On Time V_{AUDIO}↑ to Output	V_{BUS} = 0V	$V_{D+/R, D-/L}$=1.0V R_L=50Ω, C_L=50pF Figure 16, Figure 18			10	µs
$t_{OFFAUDIO1}$	Turn-Off Time V_{BUS}↑ to Output	V_{AUDIO}=2.7 for V_{BUS} ↑	$V_{D+/R, D-/L}$=1.0V R_L=50Ω, C_L=50pF Figure 16, Figure 18			10	µs
$t_{ONAUDIO2}$	Turn-On Time A_{SEL} to Output	V_{BUS}=4.25V V_{AUDIO}=2.7	$V_{D+/R, D-/L}$=1.0V R_L=50Ω, C_L=50pF Figure 16, Figure 17			1	µs
$t_{OFFAUDIO2}$	Turn-Off Time A_{SEL} to Output	V_{BUS} =4.25V V_{AUDIO}=2.7	$V_{D+/R, D-/L}$=1.0V R_L=50Ω, C_L=50pF Figure 16, Figure 18			1	µs
$t_{ONAUDIO3}$	Turn-On Time V_{BUS}↓ to Output	V_{AUDIO}=2.7	$V_{D+/R, D-/L}$=1.0V R_L=50Ω, C_L=50pF Figure 16, Figure 17			10	µs
t_{ONUSB}	Turn-On Time V_{USB}↑ to Output	V_{AUDIO} = 2.7	$V_{D+/R, D-/L}$=1.0V R_L=50Ω, C_L=50pF Figure 16, Figure 18			10	µs
t_{OFFUSB}	Turn-Off Time V_{USB}↓ to Output	V_{AUDIO}=2.7	$V_{D+/R, D-/L}$=1.0V R_L=50Ω, C_L=50pF Figure 16, Figure 18			10	µs
t_{PDUSB}	USB Switch Propagation Delay(8)	V_{AUDIO}=2.7 V_{BUS}=4.25V	R_L=50Ω, C_L=50pF Figure 19		0.25		ns
$OIRR_{USB}$	Off-Isolation - USB	V_{AUDIO}=2.7 V_{BUS}=4.25V	f=6MHz, R_T=50Ω, C_L=0pF Figure 8, Figure 23		-55		dB
$OIRR_A$	Off-Isolation - Audio	V_{AUDIO}=2.7 V_{BUS}=4.25V	f=6MHz, R_T=50Ω, C_L=0pF Figure 7, Figure 23		-37		dB
$Xtalk_{USB}$	Non-Adjacent Channel Crosstalk - USB	V_{AUDIO}=2.7 V_{BUS}=4.25V	f=6MHz, R_T=50Ω, C_L=0pF Figure 10, Figure 24		-49		dB
$Xtalk_A$	Non-Adjacent Channel Crosstalk - Audio	V_{AUDIO}=2.7 V_{BUS}=4.25V	f=6MHz, R_T=50Ω, C_L=0pF Figure 9, Figure 24		-39		dB
BW	-3db Bandwidth	V_{AUDIO}=2.7 V_{BUS}=4.25V	R_T=50Ω, C_L=0pF, Signal 0dBm Figure 11, Figure 12, Figure 22		400		MHz
THD	Total Harmonic Distortion	V_{AUDIO}=2.7 V_{BUS}=0V	f=20Hz to 20kHz, R_L=32Ω, $V_{R,L}$=2V_{pp} Figure 27		0.05		%
PSRR	Power Supply Rejection Ratio	V_{AUDIO}=3.3 V_{BUS}=0V	f=217Hz on V_{AUDIO} $V_{R,L}$=1.0V, R_T=32Ω, V_{Ripple}=600mV_{pp}		-56		dB

Note:

8. Guaranteed by characterization, not production tested.

© 2006 Fairchild Semiconductor Corporation

USB Full-Speed Related AC Electrical Characteristics

Symbol	Parameter	V_{AUDIO} / V_{BUS}(V)	Condition	T_A=-40ºC to +85ºC			Unit
				Min.	Typ.	Max.	
$t_{SK(o)}$	Channel-to-Channel Skew[9]	V_{AUDIO}=2.7V V_{BUS}=4.25V	t_R=t_F=12ns (10-90%) at 6MHz C_L=50pF, R_L=50Ω Figure 20, Figure 21		150		ps
$t_{SK(P)}$	Skew of Opposite Transitions of the Same Output[9]	V_{AUDIO}=2.7V V_{BUS}=4.25V	t_R=t_F=12ns (10-90%) at 6MHz C_L=50pF, R_L=50Ω Figure 20, Figure 21		150		ps
t_J	Total Jitter[9]	V_{AUDIO}=2.7V V_{BUS}=4.25V	R_L=50Ω, C_L=50pF, t_R=t_F=12ns (10-90%) at 12Mbps (PRBS=2^{15} – 1)		1.6		ns

Note:

9. Guaranteed by characterization, not production tested.

Capacitance

Symbol	Parameter	V_{AUDIO} / V_{BUS}(V)	Condition	T_A=-40ºC to +85ºC			Unit
				Min.	Typ.	Max.	
$C_{IN\ (ASEL)}$	Control Pin Input Capacitance (A_{SEL})	V_{AUDIO}=2.7V V_{BUS}=4.25V	V_{Bias}=0.2V		2.5		pF
$C_{ON(D+/R,\ D-/L)}$	D+/R, D-/L (Common Port) On Capacitance	V_{AUDIO}=2.7V V_{BUS}=4.25V A_{SEL}=0V (C_{ONUSB})	V_{Bias}=0.2V, f=6MHz Figure 26		25		pF
		V_{AUDIO}=2.7V V_{BUS}=4.25V A_{SEL}=2.7V ($C_{ONAudio}$)	V_{Bias}=0.2V, f=6MHz Figure 26		29		
$C_{OFF(D+,\ D-)}$	USB Input Source Off Capacitance	V_{AUDIO}=2.7V V_{BUS}=4.25V A_{SEL}=2.7V	f=6MHz, Figure 25		5		pF
$C_{OFF(R/L)}$	Audio Input Source Off Capacitance	V_{AUDIO}=2.7V V_{BUS}=4.25V A_{SEL}=0V	f=6MHz, Figure 25		17		pF

© 2006 Fairchild Semiconductor Corporation

Typical Characteristics

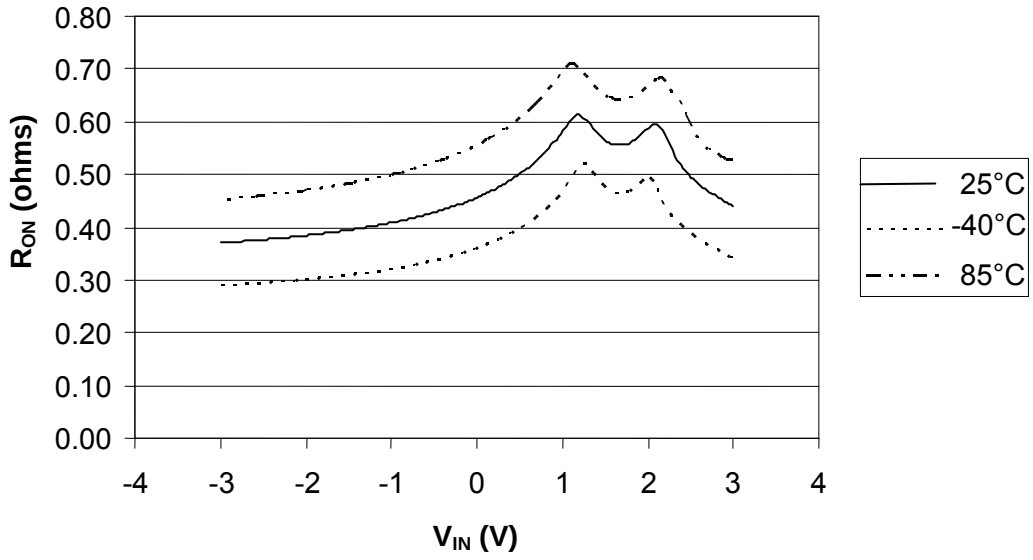

Figure 5. R_{ON} Audio Characterization (R_{ON} Audio R, V_{AUDIO}=2.7V)

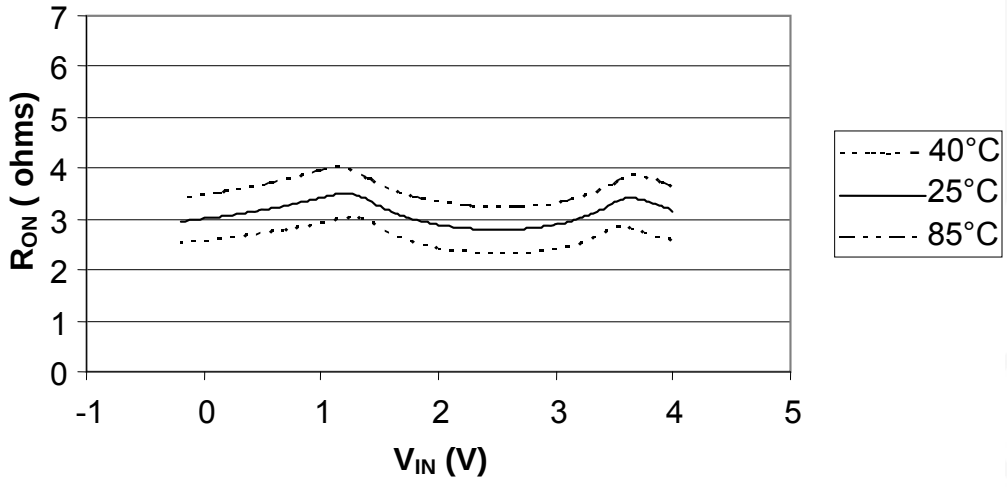

Figure 6. R_{ON} USB Characterization (R_{ON} USB D+)

Typical Characteristics (Continued)

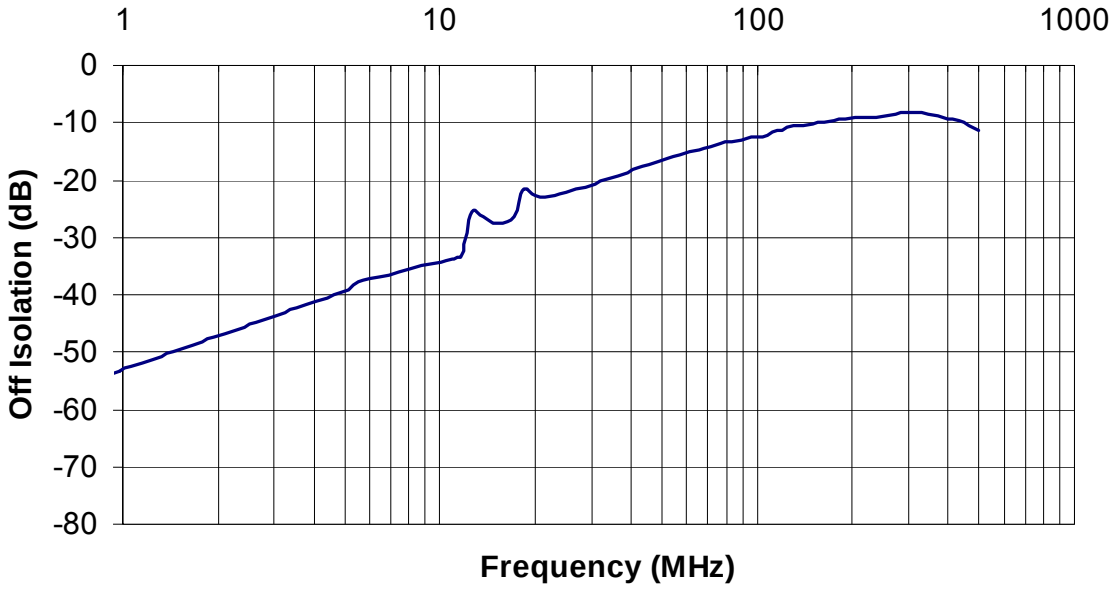

Figure 7. Off-Isolation (Audio) Characterization, Frequency Response at V_{CC} (V_{AUDIO})=2.7V

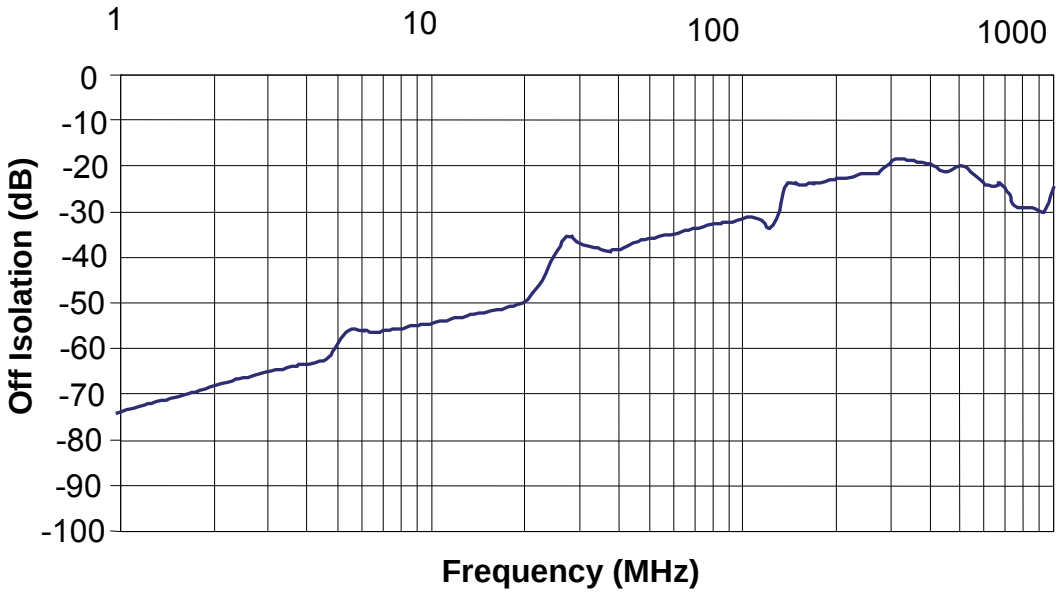

Figure 8. Off-Isolation (USB) Characterization, Frequency Response at V_{CC} (V_{BUS})=4.25V

© 2006 Fairchild Semiconductor Corporation

Typical Characteristics (Continued)

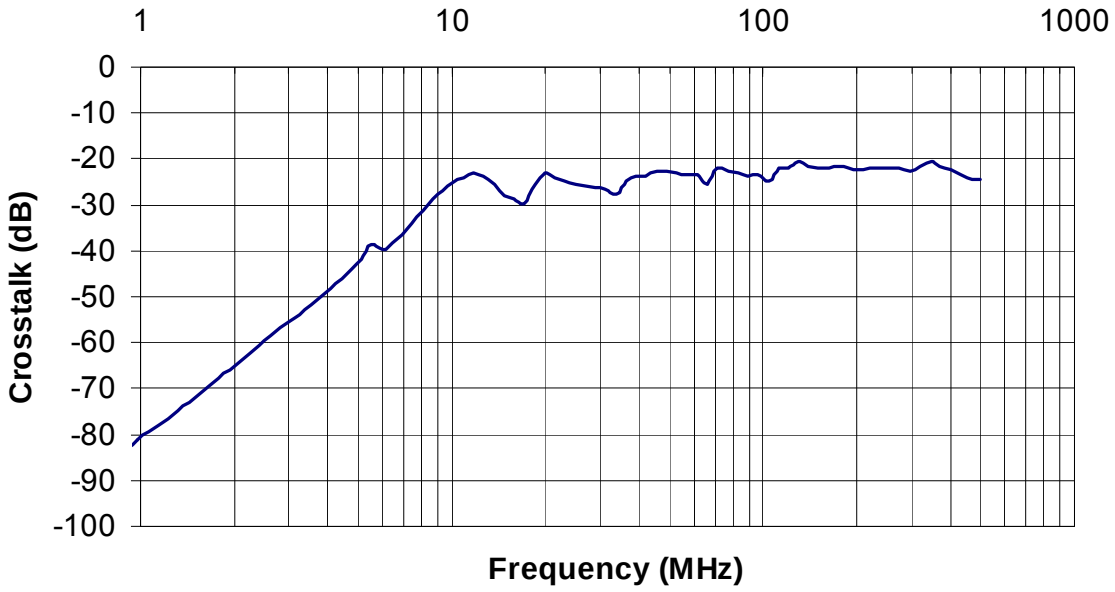

Figure 9. Non-Adjacent Channel Crosstalk (Audio) Characterization at V_{CC} (V_{AUDIO})=2.7V

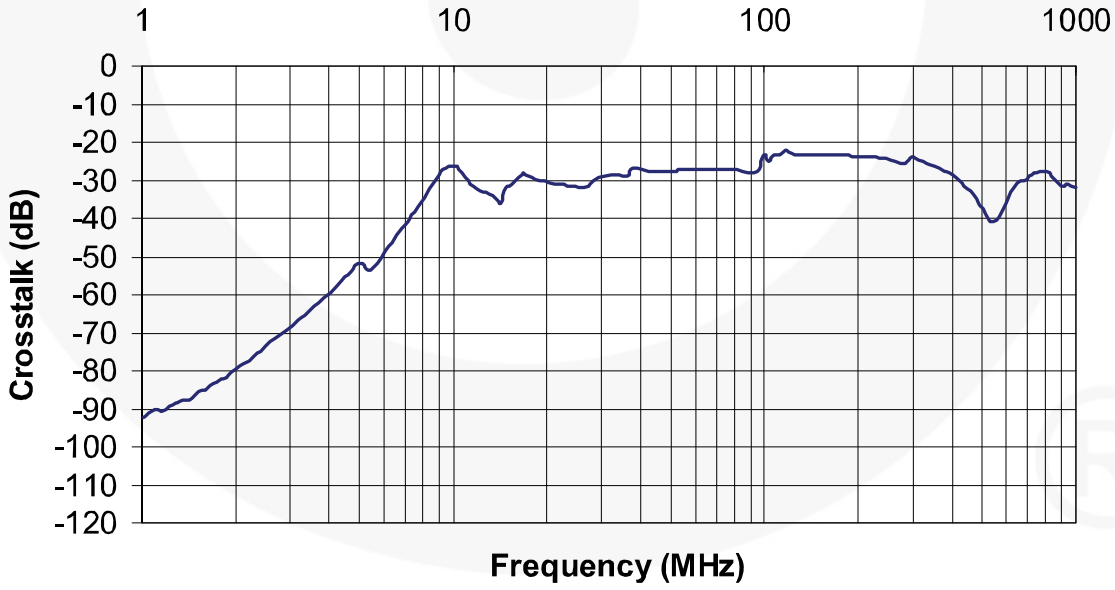

Figure 10. Non-Adjacent Channel Crosstalk (USB) Characterization at V_{CC} (V_{BUS})=4.25V

© 2006 Fairchild Semiconductor Corporation

Typical Characteristics (Continued)

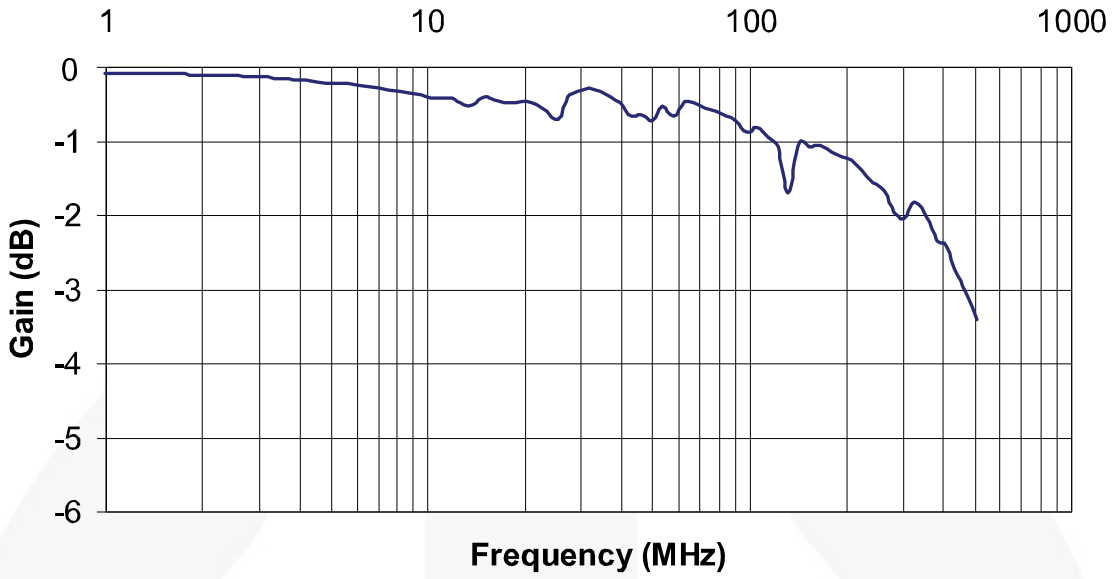

Figure 11. Bandwidth Characterization, Frequency Response at C_L=0pF, V_{CC} (V_{AUDIO})=2.7V

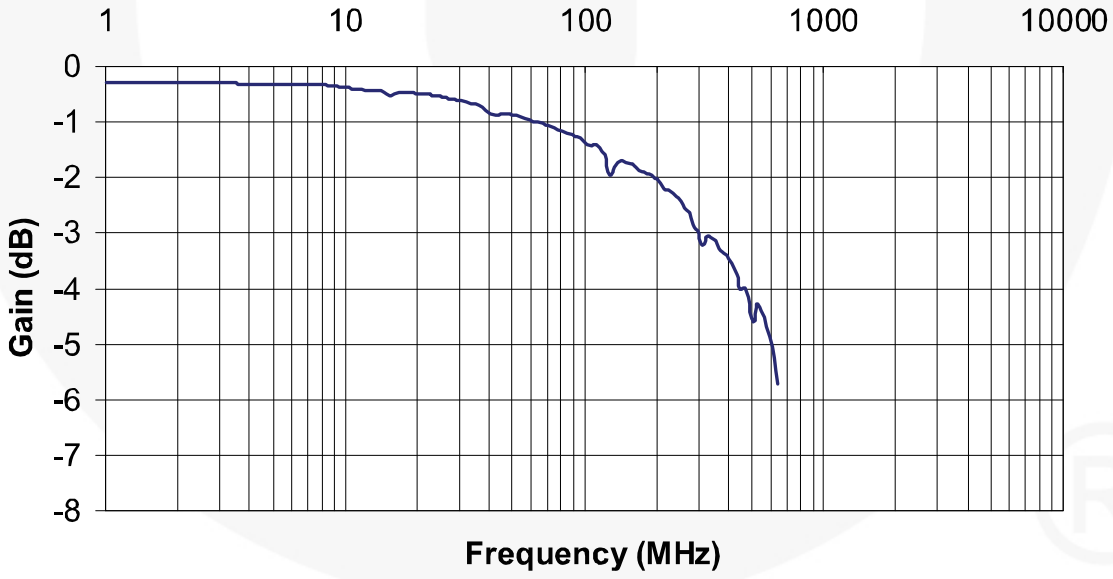

Figure 12. Bandwidth Characterization, Frequency Response at C_L=0pF, V_{CC} (V_{BUS})=4.25V

© 2006 Fairchild Semiconductor Corporation

Test Diagrams

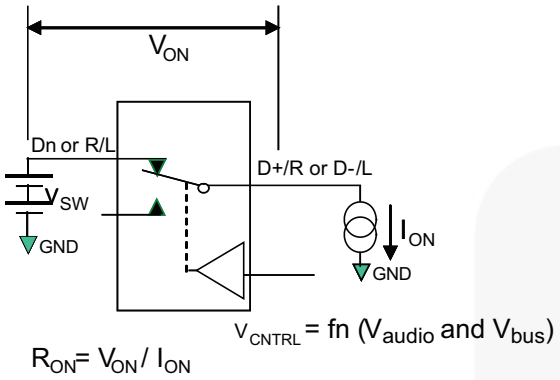

Figure 13. On Resistance

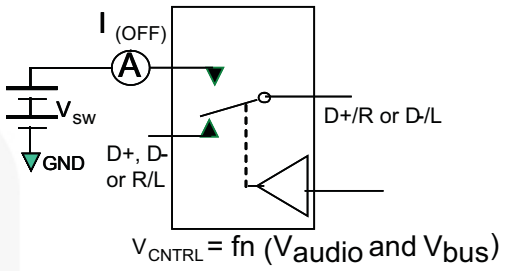

Figure 14. Off Leakage

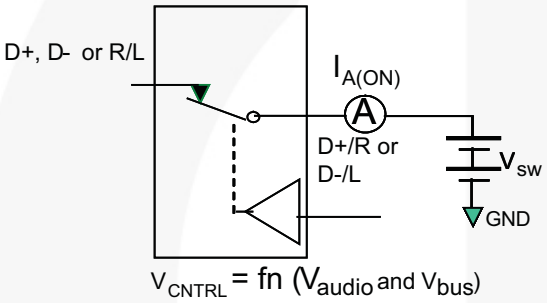

Figure 15. On Leakage

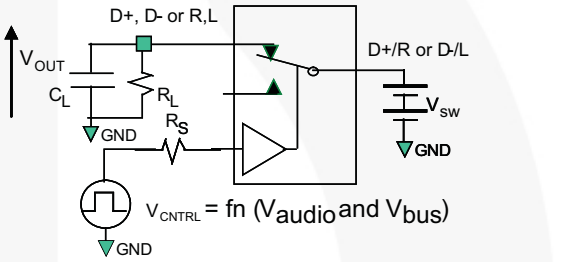

R_L , R_S and C_L are function of application environment (see AC Tables for specific values)
C_L includes test fixture and stray capacitance

Figure 16. AC Test Circuit Load

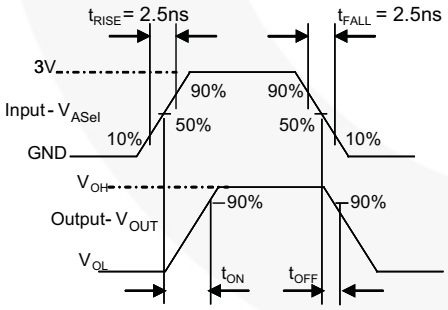

Figure 17. Turn-On / Turn-Off Waveforms (A_{SEL})

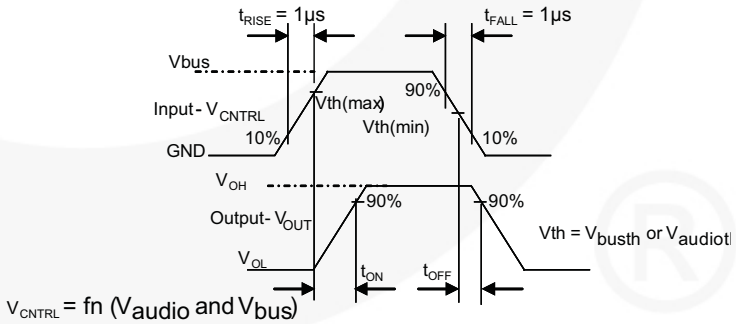

Figure 18. Turn-On / Turn-Off Waveforms (USB/Audio)

Test Diagrams (Continued)

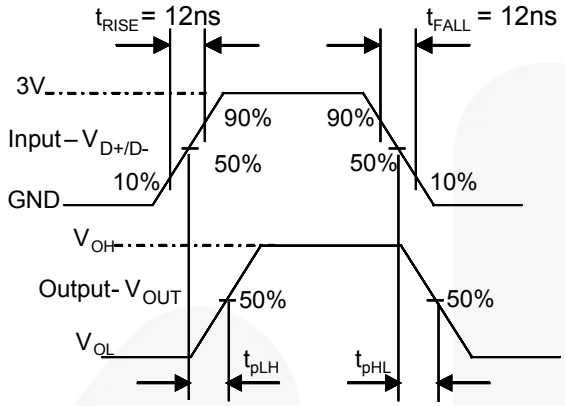

Figure 19. USB Switch Propagation Delay Waveforms

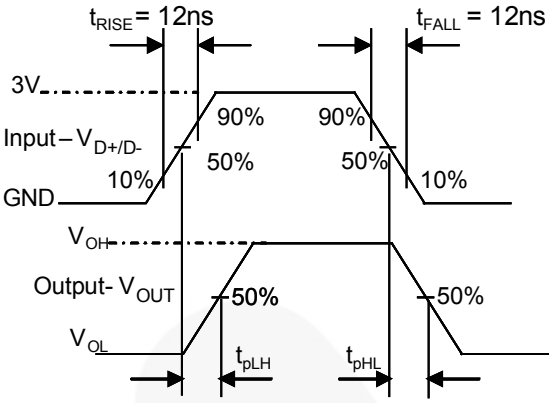

Figure 20. Pulse Skew: $t_{SK(P)}$= | t_{PHL} – t_{PLH} |

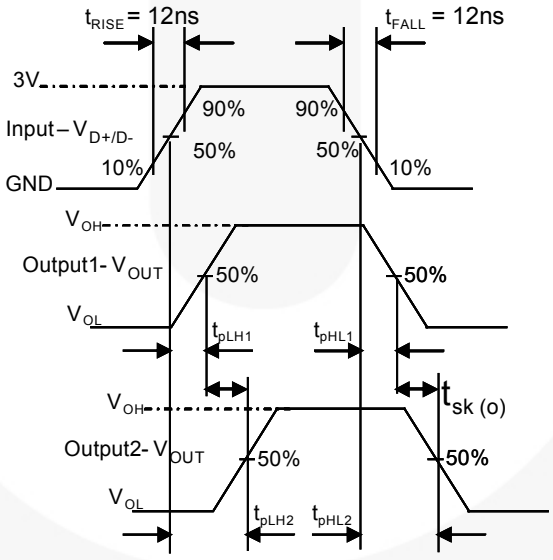

Figure 21. Output Skew: $t_{SK(O)}$= | t_{PLH1} – t_{PLH2} | or | t_{PHL1} – t_{PHL2} |

Test Diagrams (Continued)

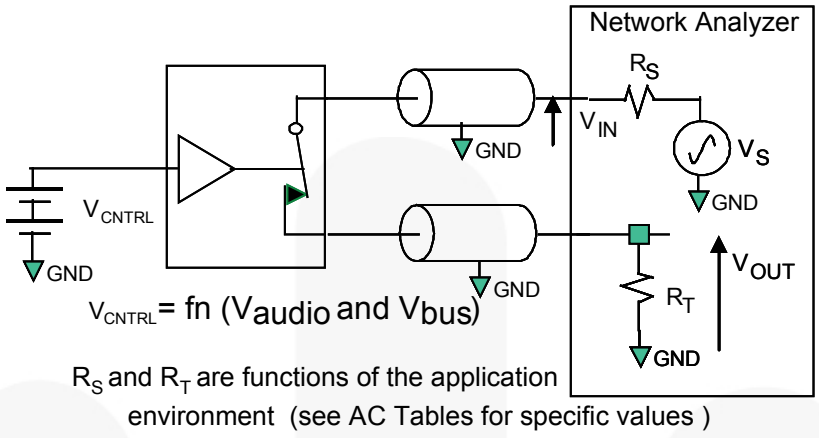

Figure 22. USB Bandwidth

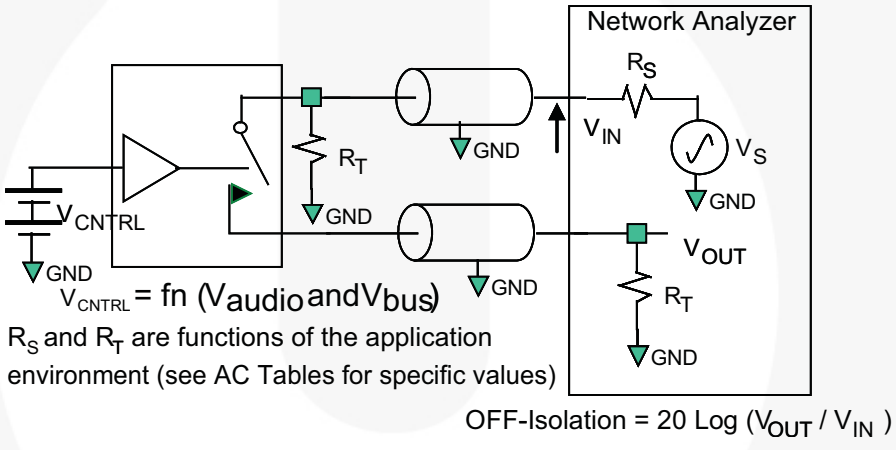

Figure 23. Channel Off Isolation

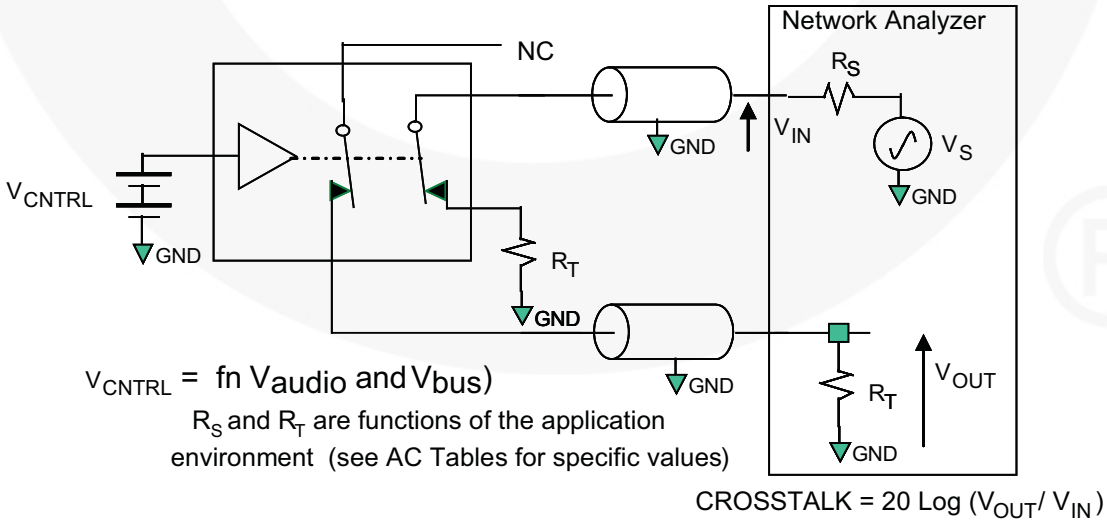

Figure 24. Non-Adjacent Channel-to-Channel Crosstalk

© 2006 Fairchild Semiconductor Corporation

Test Diagrams (Continued)

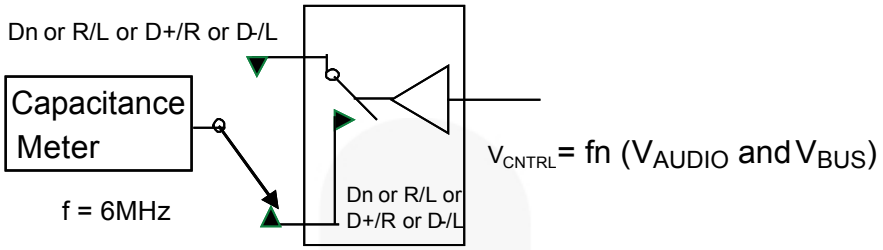

Figure 25. Channel Off Capacitance

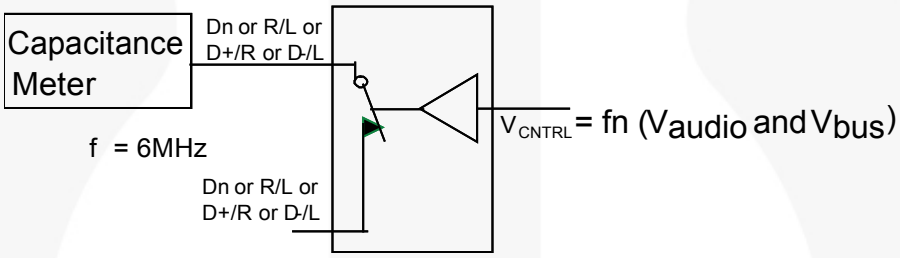

Figure 26. Channel On Capacitance

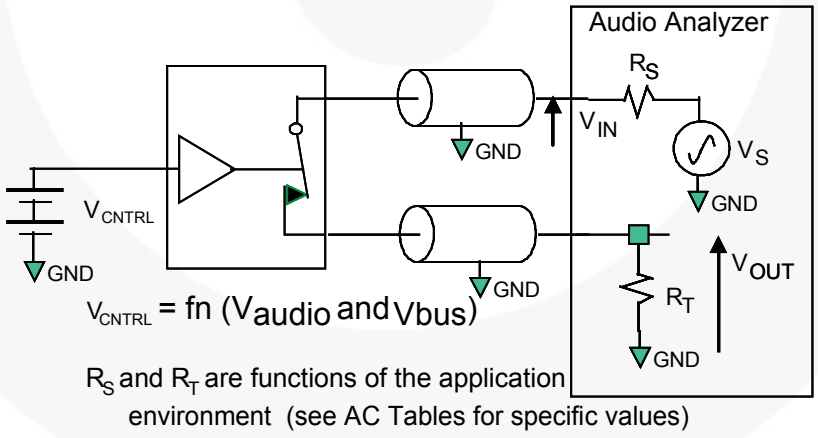

Figure 27. Total Harmonic Distortion

Physical Dimensions

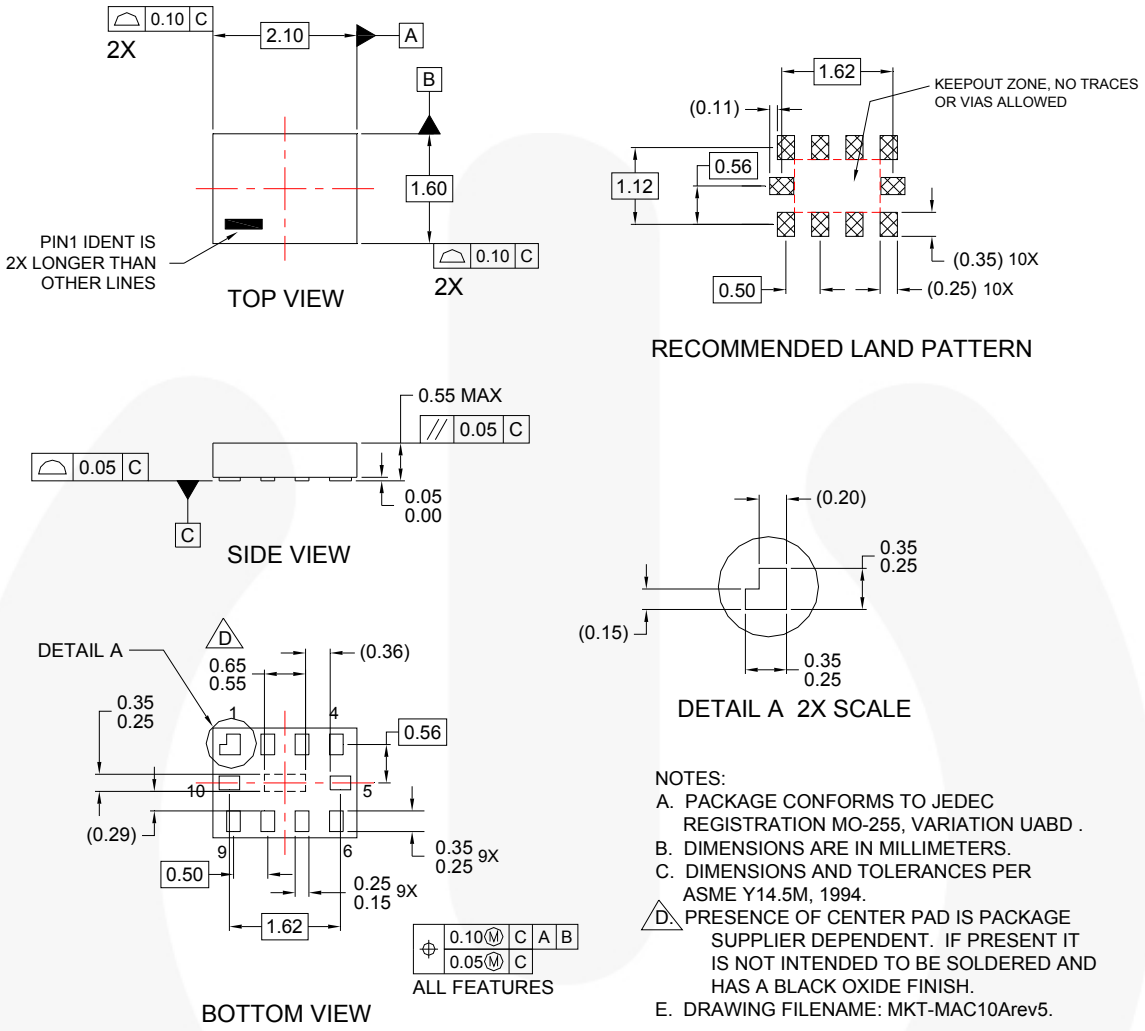

NOTES:

A. PACKAGE CONFORMS TO JEDEC REGISTRATION MO-255, VARIATION UABD .

B. DIMENSIONS ARE IN MILLIMETERS.

C. DIMENSIONS AND TOLERANCES PER ASME Y14.5M, 1994.

D. PRESENCE OF CENTER PAD IS PACKAGE SUPPLIER DEPENDENT. IF PRESENT IT IS NOT INTENDED TO BE SOLDERED AND HAS A BLACK OXIDE FINISH.

E. DRAWING FILENAME: MKT-MAC10Arev5.

Figure 28. 10-Lead MicroPak™

Package Designator	Tape Section	Number Cavity	Cavity Status	Cover Tape Status
L10X	Leader (Start End)	125 (typical)	Empty	Sealed
	Carrier	5000	Filled	Sealed
	Trailer (Hub End)	75 (typical)	Empty	Sealed

Package drawings are provided as a service to customers considering Fairchild components. Drawings may change in any manner without notice. Please note the revision and/or date on the drawing and contact a Fairchild Semiconductor representative to verify or obtain the most recent revision. Package specifications do not expand the terms of Fairchild's worldwide terms and conditions, specifically the warranty therein, which covers Fairchild products.

Always visit Fairchild Semiconductor's online packaging area for the most recent package drawings:
http://www.fairchildsemi.com/packaging/.

For current tape and reel specifications, visit Fairchild Semiconductor's online packaging area:
http://www.fairchildsemi.com/products/logic/pdf/micropak_tr.pdf.

© 2006 Fairchild Semiconductor Corporation

Physical Dimensions

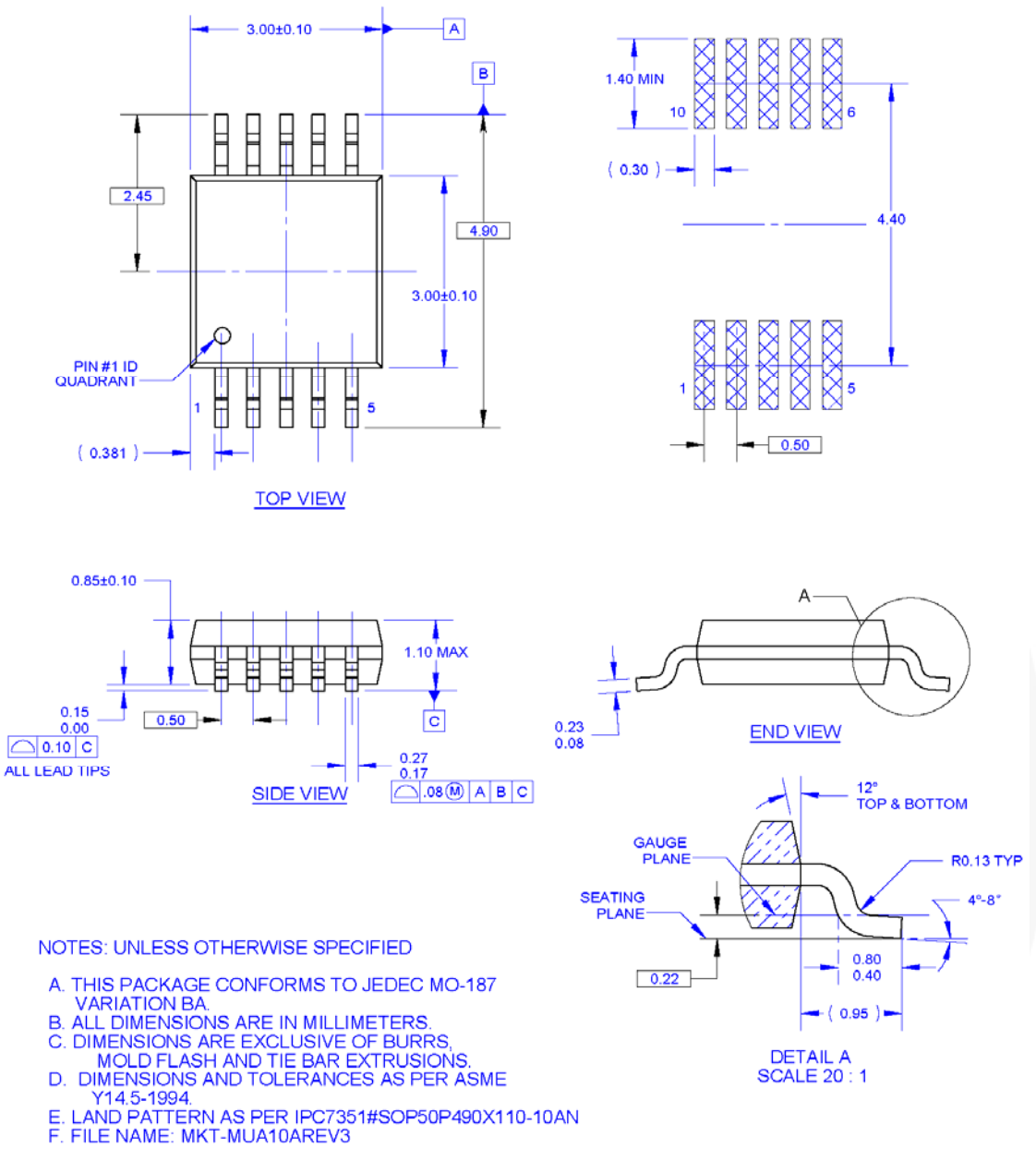

Figure 29. 10-Lead Molded Small Outline Package (MSOP)

Tape Size	A	B	C	D	N	W1	W2	W3
	13	0.059	0.512	0.795	7.008	0.448	0.724	0.486-0.606
(12mm)	(330)	(1.5)	(13)	(20.2)	(178)	(12.4)	(18.4)	(11.9-15.4)

Package drawings are provided as a service to customers considering Fairchild components. Drawings may change in any manner without notice. Please note the revision and/or date on the drawing and contact a Fairchild Semiconductor representative to verify or obtain the most recent revision. Package specifications do not expand the terms of Fairchild's worldwide terms and conditions, specifically the warranty therein, which covers Fairchild products.

Always visit Fairchild Semiconductor's online packaging area for the most recent package drawings:
http://www.fairchildsemi.com/packaging/.

For current tape and reel specifications, visit Fairchild Semiconductor's online packaging area:
http://www.fairchildsemi.com/products/analog/pdf/msop10_tr.pdf.

© 2006 Fairchild Semiconductor Corporation

FAIRCHILD SEMICONDUCTOR®

TRADEMARKS

The following includes registered and unregistered trademarks and service marks, owned by Fairchild Semiconductor and/or its global subsidiaries, and is not intended to be an exhaustive list of all such trademarks.

2Cool™
AccuPower™
AX-CAP™*
BitSiC™
Build it Now™
CorePLUS™
CorePOWER™
CROSSVOLT™
CTL™
Current Transfer Logic™
DEUXPEED®
Dual Cool™
EcoSPARK®
EfficientMax™
ESBC™
F®
Fairchild®
Fairchild Semiconductor®
FACT Quiet Series™
FACT®
FAST®
FastvCore™
FETBench™
FlashWriter®*
FPS™
F-PFS™
FRFET®
Global Power Resource℠
GreenBridge™
Green FPS™
Green FPS™ e-Series™
Gmax™
GTO™
IntelliMAX™
ISOPLANAR™
Making Small Speakers Sound Louder and Better™
MegaBuck™
MICROCOUPLER™
MicroFET™
MicroPak™
MicroPak2™
MillerDrive™
MotionMax™
mWSaver™
OptoHiT™
OPTOLOGIC®
OPTOPLANAR®
PowerTrench®
PowerXS™
Programmable Active Droop™
QFET®
QS™
Quiet Series™
RapidConfigure™
™
Saving our world, 1mW/W/kW at a time™
SignalWise™
SmartMax™
SMART START™
Solutions for Your Success™
SPM®
STEALTH™
SuperFET®
SuperSOT™-3
SuperSOT™-6
SuperSOT™-8
SupreMOS®
SyncFET™
Sync-Lock™
SYSTEM GENERAL®*
The Power Franchise®
the power franchise
TinyBoost™
TinyBuck™
TinyCalc™
TinyLogic®
TINYOPTO™
TinyPower™
TinyPWM™
TinyWire™
TranSiC™
TriFault Detect™
TRUECURRENT®*
μSerDes™
SerDes
UHC®
Ultra FRFET™
UniFET™
VCX™
VisualMax™
VoltagePlus™
XS™

* Trademarks of System General Corporation, used under license by Fairchild Semiconductor.

DISCLAIMER

FAIRCHILD SEMICONDUCTOR RESERVES THE RIGHT TO MAKE CHANGES WITHOUT FURTHER NOTICE TO ANY PRODUCTS HEREIN TO IMPROVE RELIABILITY, FUNCTION, OR DESIGN. FAIRCHILD DOES NOT ASSUME ANY LIABILITY ARISING OUT OF THE APPLICATION OR USE OF ANY PRODUCT OR CIRCUIT DESCRIBED HEREIN; NEITHER DOES IT CONVEY ANY LICENSE UNDER ITS PATENT RIGHTS, NOR THE RIGHTS OF OTHERS. THESE SPECIFICATIONS DO NOT EXPAND THE TERMS OF FAIRCHILD'S WORLDWIDE TERMS AND CONDITIONS, SPECIFICALLY THE WARRANTY THEREIN, WHICH COVERS THESE PRODUCTS.

LIFE SUPPORT POLICY

FAIRCHILD'S PRODUCTS ARE NOT AUTHORIZED FOR USE AS CRITICAL COMPONENTS IN LIFE SUPPORT DEVICES OR SYSTEMS WITHOUT THE EXPRESS WRITTEN APPROVAL OF FAIRCHILD SEMICONDUCTOR CORPORATION.

As used herein:

1. Life support devices or systems are devices or systems which, (a) are intended for surgical implant into the body or (b) support or sustain life, and (c) whose failure to perform when properly used in accordance with instructions for use provided in the labeling, can be reasonably expected to result in a significant injury of the user.
2. A critical component in any component of a life support, device, or system whose failure to perform can be reasonably expected to cause the failure of the life support device or system, or to affect its safety or effectiveness.

ANTI-COUNTERFEITING POLICY

Fairchild Semiconductor Corporation's Anti-Counterfeiting Policy. Fairchild's Anti-Counterfeiting Policy is also stated on our external website, www.fairchildsemi.com, under Sales Support.

Counterfeiting of semiconductor parts is a growing problem in the industry. All manufacturers of semiconductor products are experiencing counterfeiting of their parts. Customers who inadvertently purchase counterfeit parts experience many problems such as loss of brand reputation, substandard performance, failed applications, and increased cost of production and manufacturing delays. Fairchild is taking strong measures to protect ourselves and our customers from the proliferation of counterfeit parts. Fairchild strongly encourages customers to purchase Fairchild parts either directly from Fairchild or from Authorized Fairchild Distributors who are listed by country on our web page cited above. Products customers buy either from Fairchild directly or from Authorized Fairchild Distributors are genuine parts, have full traceability, meet Fairchild's quality standards for handling and storage and provide access to Fairchild's full range of up-to-date technical and product information. Fairchild and our Authorized Distributors will stand behind all warranties and will appropriately address any warranty issues that may arise. Fairchild will not provide any warranty coverage or other assistance for parts bought from Unauthorized Sources. Fairchild is committed to combat this global problem and encourage our customers to do their part in stopping this practice by buying direct or from authorized distributors.

PRODUCT STATUS DEFINITIONS

Definition of Terms

Datasheet Identification	Product Status	Definition
Advance Information	Formative / In Design	Datasheet contains the design specifications for product development. Specifications may change in any manner without notice.
Preliminary	First Production	Datasheet contains preliminary data; supplementary data will be published at a later date. Fairchild Semiconductor reserves the right to make changes at any time without notice to improve design.
No Identification Needed	Full Production	Datasheet contains final specifications. Fairchild Semiconductor reserves the right to make changes at any time without notice to improve the design.
Obsolete	Not In Production	Datasheet contains specifications on a product that is discontinued by Fairchild Semiconductor. The datasheet is for reference information only.

Rev. I62

© 2006 Fairchild Semiconductor Corporation

ON Semiconductor and ON are trademarks of Semiconductor Components Industries, LLC dba ON Semiconductor or its subsidiaries in the United States and/or other countries. ON Semiconductor owns the rights to a number of patents, trademarks, copyrights, trade secrets, and other intellectual property. A listing of ON Semiconductor's product/patent coverage may be accessed at www.onsemi.com/site/pdf/Patent−Marking.pdf. ON Semiconductor reserves the right to make changes without further notice to any products herein. ON Semiconductor makes no warranty, representation or guarantee regarding the suitability of its products for any particular purpose, nor does ON Semiconductor assume any liability arising out of the application or use of any product or circuit, and specifically disclaims any and all liability, including without limitation special, consequential or incidental damages. Buyer is responsible for its products and applications using ON Semiconductor products, including compliance with all laws, regulations and safety requirements or standards, regardless of any support or applications information provided by ON Semiconductor. "Typical" parameters which may be provided in ON Semiconductor data sheets and/or specifications can and do vary in different applications and actual performance may vary over time. All operating parameters, including "Typicals" must be validated for each customer application by customer's technical experts. ON Semiconductor does not convey any license under its patent rights nor the rights of others. ON Semiconductor products are not designed, intended, or authorized for use as a critical component in life support systems or any FDA Class 3 medical devices or medical devices with a same or similar classification in a foreign jurisdiction or any devices intended for implantation in the human body. Should Buyer purchase or use ON Semiconductor products for any such unintended or unauthorized application, Buyer shall indemnify and hold ON Semiconductor and its officers, employees, subsidiaries, affiliates, and distributors harmless against all claims, costs, damages, and expenses, and reasonable attorney fees arising out of, directly or indirectly, any claim of personal injury or death associated with such unintended or unauthorized use, even if such claim alleges that ON Semiconductor was negligent regarding the design or manufacture of the part. ON Semiconductor is an Equal Opportunity/Affirmative Action Employer. This literature is subject to all applicable copyright laws and is not for resale in any manner.

PUBLICATION ORDERING INFORMATION

LITERATURE FULFILLMENT:
Literature Distribution Center for ON Semiconductor
19521 E. 32nd Pkwy, Aurora, Colorado 80011 USA
Phone: 303−675−2175 or 800−344−3860 Toll Free USA/Canada
Fax: 303−675−2176 or 800−344−3867 Toll Free USA/Canada
Email: orderlit@onsemi.com

N. American Technical Support: 800−282−9855 Toll Free USA/Canada
Europe, Middle East and Africa Technical Support:
Phone: 421 33 790 2910
Japan Customer Focus Center
Phone: 81−3−5817−1050

ON Semiconductor Website: **www.onsemi.com**

Order Literature: http://www.onsemi.com/orderlit

For additional information, please contact your local Sales Representative