AMERICAN MICROSYSTEMS, INC.

FS6209

Dual PLL VCXO Clock Generator IC

February 1999

Preliminary Information

1.0 Features

- Dual phase-locked loop (PLL) device two output clock frequencies
- On-chip tunable voltage-controlled crystal oscillator (VCXO) allows precise system frequency tuning
- 3.3V supply voltage
- Small circuit board footprint (8-pin 0.150″ SOIC)
- Custom frequency selections available - contact your local AMI Sales Representative for more information

Figure 1: Pin Configuration

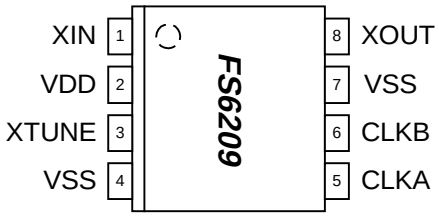

8-pin (0.150″) SOIC

2.0 Description

The FS6209 is a monolithic CMOS clock generator IC designed to minimize cost and component count in digital video/audio systems.

At the core of the FS6209 is circuitry that implements a voltage-controlled crystal oscillator when an external resonator (nominally 13.5MHz) is attached. The VCXO allows device frequencies to be precisely adjusted for use in systems that have frequency matching requirements, such as digital satellite receivers.

Two high-resolution phase-locked loops generate two output clocks (CLKA and CLKB) through an array of post-dividers. All frequencies are ratiometrically derived from the VCXO frequency. The locking of all the output frequencies together can eliminate unpredictable artifacts in video systems and reduce electromagnetic interference (EMI) due to frequency harmonic stacking.

Table 1: Crystal / Output Frequencies

DEVICE	f_{XIN} (MHz)	CLKA (MHz)	CLKB (MHz)
FS6209-01	13.5	54	22.5792 (+1.12ppm)

NOTE: Contact AMI for custom PLL frequencies

Figure 2: Block Diagram

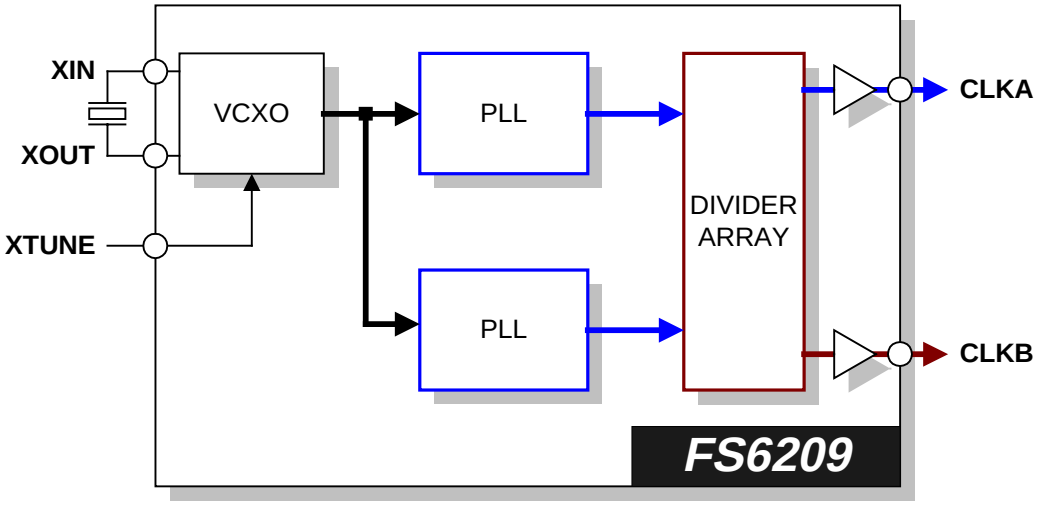

This document contains information on a preproduction product. Specifications and information herein are subject to change without notice.

Table 2: Pin Descriptions

Key: AI = Analog Input; AO = Analog Output; DI = Digital Input; DI^U = Input with Internal Pull-Up; DI_D = Input with Internal Pull-Down; DIO = Digital Input/Output; DI-3 = Three-Level Digital Input, DO = Digital Output; P = Power/Ground; # = Active Low pin

PIN	TYPE	NAME	DESCRIPTION
1	AI	XIN	VCXO Feedback
2	P	VDD	Power Supply (+3.3V)
3	AI	XTUNE	VCXO Tune
4	P	VSS	Ground
5	DO	CLKA	Clock Output A
6	DO	CLKB	Clock Output B
7	DO	VSS	Ground
8	AO	XOUT	VCXO Drive

3.0 Functional Block Description

3.1 Phase-Locked Loop (PLL)

The on-chip PLLs are a standard frequency- and phase-locked loop architecture. The PLL multiplies the reference oscillator to the desired frequency by a ratio of integers. The frequency multiplication is exact with a zero synthesis error.

3.2 Voltage-Controlled Crystal Oscillator (VCXO)

The VCXO provides a tunable, low-jitter frequency reference for the rest of the FS6209 system components. Loading capacitance for the crystal is internal to the FS6209. No external components (other than the resonator itself) are required for operation of the VCXO.

Continuous fine-tuning of the VCXO frequency is accomplished by varying the voltage on the XTUNE pin. The total change (from one extreme to the other) in effective loading capacitance is t.b.d. nominal.

The oscillator operates the crystal resonator in the parallel-resonant mode. Crystal warping, or the “pulling” of the crystal oscillation frequency, is accomplished by altering the effective load capacitance presented to the crystal by the oscillator circuit. The actual amount that changing the load capacitance alters the oscillator frequency will be dependent on the characteristics of the crystal as well as the oscillator circuit itself.

Specifically, the motional capacitance of the crystal (usually referred to by crystal manufacturers as C_1), the static capacitance of the crystal (C_0), and the load capacitance (C_L) of the oscillator determine the warping capability of the crystal in the oscillator circuit.

A simple formula to obtain the warping capability of a crystal oscillator is:

$$\Delta f\ (ppm) = \frac{C_1 \times (C_{L2} - C_{L1}) \times 10^6}{2 \times (C_0 + C_{L2}) \times (C_0 + C_{L1})}$$

where C_{L1} and C_{L2} are the two extremes of the applied load capacitance.

EXAMPLE: A crystal with the following parameters is used. With C_1 = 0.02pF, C_0 = 5pF, C_{L1} = 10pF, and C_{L2} = 22.66pF, the coarse tuning range is

$$\Delta f = \frac{0.02 \times (22.66 - 10) \times 10^6}{2 \times (5 + 22.66) \times (5 + 10)} = 305\,ppm.$$

4.0 Electrical Specifications

Table 3: Absolute Maximum Ratings

Stresses above those listed under Absolute Maximum Ratings may cause permanent damage to the device. These conditions represent a stress rating only, and functional operation of the device at these or any other conditions above the operational limits noted in this specification is not implied. Exposure to maximum rating conditions for extended conditions may affect device performance, functionality, and reliability.

PARAMETER	SYMBOL	MIN.	MAX.	UNITS
Supply Voltage (V_{SS} = ground)	V_{DD}	V_{SS}-0.5	7	V
Input Voltage, dc	V_I	V_{SS}-0.5	V_{DD}+0.5	V
Output Voltage, dc	V_O	V_{SS}-0.5	V_{DD}+0.5	V
Input Clamp Current, dc (V_I < 0 or V_I > V_{DD})	I_{IK}	-50	50	mA
Output Clamp Current, dc (V_I < 0 or V_I > V_{DD})	I_{OK}	-50	50	mA
Storage Temperature Range (non-condensing)	T_S	-65	150	°C
Ambient Temperature Range, Under Bias	T_A	-55	125	°C
Junction Temperature	T_J		125	°C
Lead Temperature (soldering, 10s)			260	°C
Input Static Discharge Voltage Protection (MIL-STD 883E, Method 3015.7)			2	kV



CAUTION: ELECTROSTATIC SENSITIVE DEVICE

Permanent damage resulting in a loss of functionality or performance may occur if this device is subjected to a high-energy electrostatic discharge.

Table 4: Operating Conditions

PARAMETER	SYMBOL	CONDITIONS/DESCRIPTION	MIN.	TYP.	MAX.	UNITS
Supply Voltage	V_{DD}	3.3V ± 10%	3.0	3.3	3.6	V
Ambient Operating Temperature Range	T_A		0		70	°C

Table 5: DC Electrical Specifications

Unless otherwise stated, V_{DD} = 3.3V ± 10%, no load on any output, and ambient temperature range T_A = 0°C to 70°C. Parameters denoted with an asterisk (*) represent nominal characterization data and are not production tested to any specific limits. Where given, MIN and MAX characterization data are ± 3σ from typical. Negative currents indicate current flows out of the device.

PARAMETER	SYMBOL	CONDITIONS/DESCRIPTION	MIN.	TYP.	MAX.	UNITS
Overall						
Supply Current, Dynamic, with Loaded Outputs	I_{DD}	f_{XTAL} = 13.5MHz; C_L = 10pF		20		mA
Voltage Controlled Crystal Oscillator						
Crystal Resonator Frequency	f_{XTAL}	Fundamental Mode	5.	13.5	18	MHz
Crystal Loading Capacitance	$C_{L(xtal)}$	As seen by a crystal connected to XIN and XOUT (@ V_{XTUNE} = 1.65V)		20		pF
Crystal Resonator Motional Capacitance	$C_{1(xtal)}$	AT cut		25		fF
VCXO Tuning Range		f_{XTAL} = 13.5MHz; C_L = 20pF; C_{MOT} = 25fF		300		ppm
VCXO Tuning Characteristic		Note: positive ΔF for positive ΔV		100		ppm/V
Crystal Drive Level		R_{XTAL}=20 ohm; C_L = 20pF		200		uW
Clock Outputs (CLKA, CLKB, CLKC)						
High-Level Output Source Current *	I_{OH}	V_O = 2.0V		40		mA
Low-Level Output Sink Current *	I_{OL}	V_O = 0.4V		17		mA
Output Impedance *	z_{OH}	V_O = 0.1V_{DD}; output driving high		25		Ω
	z_{OL}	V_O = 0.1V_{DD}; output driving low		25		
Short Circuit Source Current *	I_{OSH}	V_O = 0V; shorted for 30s, max.		55		mA
Short Circuit Sink Current *	I_{OSL}	V_O = 3.3V; shorted for 30s, max.		55		mA

Table 6: AC Timing Specifications

Unless otherwise stated, V_{DD} = 3.3V ± 10%, no load on any output, and ambient temperature range T_A = 0°C to 70°C. Parameters denoted with an asterisk (*) represent nominal characterization data and are not production tested to any specific limits. Where given, MIN and MAX characterization data are ± 3σ from typical.

PARAMETER	SYMBOL	CONDITIONS/DESCRIPTION	CLOCK (MHz)	MIN.	TYP.	MAX.	UNITS
Clock Outputs (CLKx)							
Duty Cycle *		t_{hi} / t_{clk}; Measured at V_{DD}/2		43		57	%
Jitter, Absolute Period (pk-pk) *	$t_{j(\Delta P)}$	From rising edge to next rising edge at V_{DD}/2, C_L = 10pF			300		ps
Jitter, RMS Long Term ($\sigma_y(\tau)$) *	$t_{j(LT)}$	From 0-500µs at V_{DD}/2, C_L = 10pF compared to ideal clock source			150		ps
Rise Time *	t_r	V_{DD} = 3.3V; V_O = 0.3V to 3.0V; C_L = 10pF			1		ns
Fall Time *	t_f	V_{DD} = 3.3V; V_O = 3.0V to 0.3V; C_L = 10pF			1		ns
Output Frequency Synthesis Error		(unless otherwise noted in Frequency Table)				0	ppm
VCXO Stabilization Time *	$t_{VCXOSTB}$	From power valid			10		ms
PLL Stabilization Time *	t_{PLLSTB}	From VCXO stable			500		us

5.0 Package Information

Table 7: 8-pin SOIC (0.150") Package Dimensions

	DIMENSIONS			
	INCHES		MILLIMETERS	
	MIN.	MAX.	MIN.	MAX.
A	0.061	0.068	1.55	1.73
A1	0.004	0.0098	0.102	0.249
A2	0.055	0.061	1.40	1.55
B	0.013	0.019	0.33	0.49
C	0.0075	0.0098	0.191	0.249
D	0.189	0.196	4.80	4.98
E	0.150	0.157	3.81	3.99
e	0.050 BSC		1.27 BSC	
H	0.230	0.244	5.84	6.20
h	0.010	0.016	0.25	0.41
L	0.016	0.035	0.41	0.89
Θ	0°	8°	0°	8°

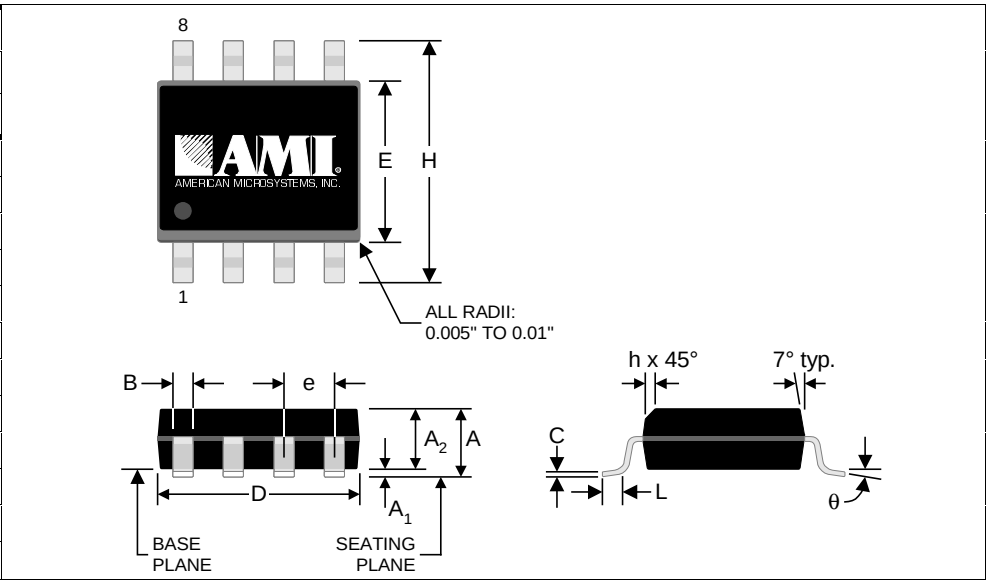

Table 8: 8-pin SOIC (0.150") Package Characteristics

PARAMETER	SYMBOL	CONDITIONS/DESCRIPTION	TYP.	UNITS
Thermal Impedance, Junction to Free-Air 8-pin 0.150" SOIC	Θ_{JA}	Air flow = 0 m/s	110	°C/W
Lead Inductance, Self	L_{11}	Corner lead	2.0	nH
		Center lead	1.6	
Lead Inductance, Mutual	L_{12}	Any lead to any adjacent lead	0.4	nH
Lead Capacitance, Bulk	C_{11}	Any lead to V_{SS}	0.27	pF

6.0 Ordering Information

ORDERING CODE	DEVICE NUMBER	PACKAGE TYPE	OPERATING TEMPERATURE RANGE	SHIPPING CONFIGURATION
11640-801	FS6209-01	8-pin (0.150") SOIC (Small Outline Package)	0°C to 70°C (Commercial)	Tape and Reel
11640-811	FS6209-01	8-pin (0.150") SOIC (Small Outline Package)	0°C to 70°C (Commercial)	Tubes

Copyright © 1998 American Microsystems, Inc.

Devices sold by AMI are covered by the warranty and patent indemnification provisions appearing in its Terms of Sale only. AMI makes no warranty, express, statutory implied or by description, regarding the information set forth herein or regarding the freedom of the described devices from patent infringement. AMI makes no warranty of merchantability or fitness for any purposes. AMI reserves the right to discontinue production and change specifications and prices at any time and without notice. AMI's products are intended for use in commercial applications. Applications requiring extended temperature range, unusual environmental requirements, or high reliability applications, such as military, medical life-support or life-sustaining equipment, are specifically not recommended without additional processing by AMI for such applications.

American Microsystems, Inc., 2300 Buckskin Rd., Pocatello, ID 83201, (208) 233-4690, FAX (208) 234-6796, WWW Address: http://www.amis.com E-mail: tgp@amis.com