FRF450D, FRF450R, FRF450H

9A, 500V, 0.615 Ohm, Rad Hard, N-Channel Power MOSFETs

June 1998

Features

- 9A, 500V, RDS(on) = 0.615Ω
- Second Generation Rad Hard MOSFET Results From New Design Concepts
- Gamma
  - Meets Pre-Rad Specifications to 100KRAD(Si)
  - Defined End Point Specs at 300KRAD(Si) and 1000KRAD(Si)
  - Performance Permits Limited Use to 3000KRAD(Si)
- Gamma Dot
  - Survives 3E9RAD(Si)/sec at 80% BVDSS Typically
  - Survives 2E12 Typically If Current Limited to IDM
- Photo Current - 30.0nA Per-RAD(Si)/sec Typically
- Neutron
  - Pre-RAD Specifications for 3E12 Neutrons/cm^2
  - Usable to 3E13 Neutrons/cm^2

Description

The Intersil has designed a series of SECOND GENERATION hardened power MOSFETs of both N and P channel enhancement types with ratings from 100V to 500V, 1A to 60A, and on resistance as low as 25mΩ. Total dose hardness is offered at 100K RAD(Si) and 1000KRAD(Si) with neutron hardness ranging from 1E13n/cm_2 for 500V product to 1E14n/cm^2 for 100V product. Dose rate hardness (GAMMA DOT) exists for rates to 1E9 without current limiting and 2E12 with current limiting.

This MOSFET is an enhancement-mode silicon-gate power field effect transistor of the vertical DMOS (VDMOS) structure. It is specially designed and processed to exhibit minimal characteristic changes to total dose (GAMMA) and neutron (n^0) exposures. Design and processing efforts are also directed to enhance survival to heavy ion (SEE) and/or dose rate (GAMMA DOT) exposure.

This part may be supplied as a die or in various packages other than shown above. Reliability screening is available as either non TX (commercial), TX equivalent of MIL-S-19500, TXV equivalent of MIL-S-19500, or space equivalent of MIL-S-19500. Contact the Intersil High-Reliability Marketing group for any desired deviations from the data sheet.

Package

TO-254AA

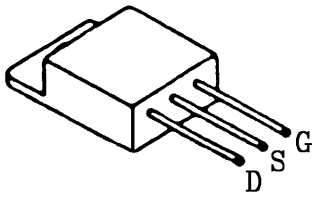

CAUTION: Beryllia Warning per MIL-S-19500 refer to package specifications.

Symbol

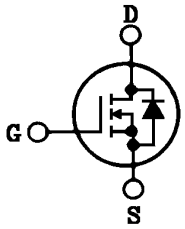

Absolute Maximum Ratings (TC = +25°C) Unless Otherwise Specified

		FRF450D, R, H	UNITS
Drain-Source Voltage	VDS	500	V
Drain-Gate Voltage (RGS = 20kΩ)	VDGR	500	V
Continuous Drain Current			
TC = +25°C	ID	9	A
TC = +100°C	ID	6	A
Pulsed Drain Current	IDM	27	A
Gate-Source Voltage	VGS	±20	V
Maximum Power Dissipation			
TC = +25°C	PT	125	W
TC = +100°C	PT	50	W
Derated Above +25°C		1.00	W/°C
Inductive Current, Clamped, L = 100μH, (See Test Figure)	ILM	27	A
Continuous Source Current (Body Diode)	IS	9	A
Pulsed Source Current (Body Diode)	ISM	27	A
Operating And Storage Temperature	TJC, TSTG	-55 to +150	°C
Lead Temperature (During Soldering)			
Distance > 0.063 in. (1.6mm) From Case, 10s Max	TL	300	°C

CAUTION: These devices are sensitive to electrostatic discharge; follow proper IC Handling Procedures.

http://www.intersil.com or 407-727-9207 | Copyright © Intersil Corporation 1999

File Number **3237.1**

Pre-Radiation Electrical Specifications TC = +25°C, Unless Otherwise Specified

PARAMETER	SYMBOL	TEST CONDITIONS	LIMITS MIN	LIMITS MAX	UNITS
Drain-Source Breakdown Volts	BVDSS	VGS = 0, ID = 1mA	500	-	V
Gate-Threshold Volts	VGS(th)	VDS = VGS, ID = 1mA	2.0	4.0	V
Gate-Body Leakage Forward	IGSSF	VGS = +20V	-	100	nA
Gate-Body Leakage Reverse	IGSSR	VGS = -20V	-	100	nA
Zero-Gate Voltage Drain Current	IDSS1 IDSS2 IDSS3	VDS = 500V, VGS = 0 VDS = 400V, VGS = 0 VDS = 400V, VGS = 0, TC = +125°C	- - -	1 0.025 0.25	mA
Rated Avalanche Current	IAR	Time = 20µs	-	27	A
Drain-Source On-State Volts	VDS(on)	VGS = 10V, ID = 9A	-	5.81	V
Drain-Source On Resistance	RDS(on)	VGS = 10V, ID = 6A	-	0.615	Ω
Turn-On Delay Time	td(on)	VDD = 250V, ID = 9A	-	148	ns
Rise Time	tr	Pulse Width = 3µs	-	196	
Turn-Off Delay Time	td(off)	Period = 300µs, Rg = 25Ω	-	800	
Fall Time	tf	0 ≤ VGS ≤ 10 (See Test Circuit)	-	180	
Gate-Charge Threshold	QG(th)	VDD = 250V, ID = 9A IGS1 = IGS2 0 ≤ VGS ≤ 20	4	16	nc
Gate-Charge On State	QG(on)		66	264	
Gate-Charge Total	QGM		121	486	
Plateau Voltage	VGP		3	12	V
Gate-Charge Source	QGS		14	56	nc
Gate-Charge Drain	QGD		31	126	
Diode Forward Voltage	VSD	ID = 9A, VGD = 0	0.6	1.8	V
Reverse Recovery Time	TT	I = 9A; di/dt = 100A/µs	-	3000	ns
Junction-To-Case	Rθjc		-	1.0	^{O}C/W
Junction-To-Ambient	Rθja	Free Air Operation	-	48	

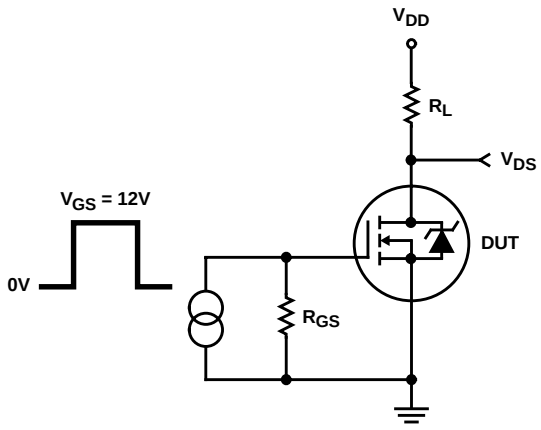

FIGURE 1. RESISTIVE SWITCHING TEST CIRCUIT

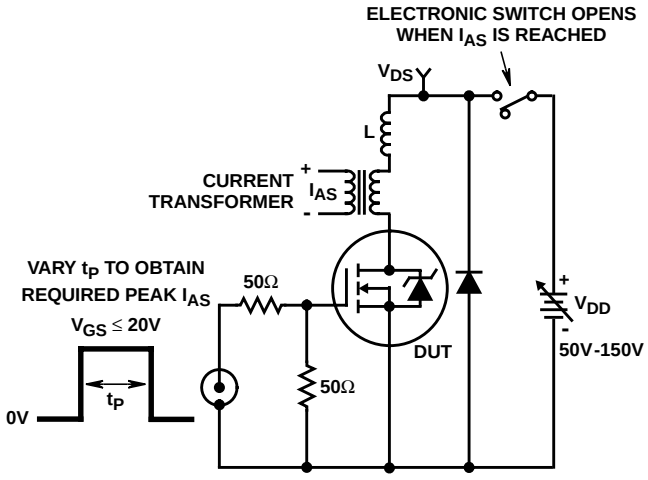

FIGURE 2. UNCLAMPED ENERGY TEST CIRCUIT

Post-Radiation Electrical Specifications TC = +25°C, Unless Otherwise Specified

PARAMETER		SYMBOL	TYPE	TEST CONDITIONS	LIMITS		UNITS
					MIN	MAX	
Drain-Source Breakdown Volts	(Note 4, 6)	BVDSS	FRF450D, R	VGS = 0, ID = 1mA	500	-	V
	(Note 5, 6)	BVDSS	FRF450H	VGS = 0, ID = 1mA	475	-	V
Gate-Source Threshold Volts	(Note 4, 6)	VGS(th)	FRF450D, R	VGS = VDS, ID = 1mA	2.0	4.0	V
	(Note 3, 5, 6)	VGS(th)	FRF450H	VGS = VDS, ID = 1mA	1.5	4.5	V
Gate-Body Leakage Forward	(Note 4, 6)	IGSSF	FRF450D, R	VGS = 20V, VDS = 0	-	100	nA
	(Note 5, 6)	IGSSF	FRF450H	VGS = 20V, VDS = 0	-	200	nA
Gate-Body Leakage Reverse	(Note 2, 4, 6)	IGSSR	FRF450D, R	VGS = -20V, VDS = 0	-	100	nA
	(Note 2, 5, 6)	IGSSR	FRF450H	VGS = -20V, VDS = 0	-	200	nA
Zero-Gate Voltage Drain Current	(Note 4, 6)	IDSS	FRF450D, R	VGS = 0, VDS = 400V	-	25	μA
	(Note 5, 6)	IDSS	FRF450H	VGS = 0, VDS = 400V	-	100	μA
Drain-Source On-State Volts	(Note 1, 4, 6)	VDS(on)	FRF450D, R	VGS = 10V, ID = 9A	-	5.81	V
	(Note 1, 5, 6)	VDS(on)	FRF450H	VGS = 16V, ID = 9A	-	8.30	V
Drain-Source On Resistance	(Note 1, 4, 6)	RDS(on)	FRF450D, R	VGS = 10V, ID = 6A	-	0.615	Ω
	(Note 1, 5, 6)	RDS(on)	FRF450H	VGS = 14V, ID = 6A	-	0.879	Ω

NOTES:

1. Pulse test, 300μs max
2. Absolute value
3. Gamma = 300KRAD(Si)
4. Gamma = 10KRAD(Si) for “D”, 100KRAD(Si) for “R”. Neutron = 3E12
5. Gamma = 1000KRAD(Si). Neutron = 3E12
6. Insitu Gamma bias must be sampled for both VGS = +10V, VDS = 0V and VGS = 0V, VDS = 80% BVDSS
7. Gamma data taken 12/18/89 on TA 17655 devices by GE ASTRO SPACE; EMC/SURVIVABILITY LABORATORY; KING OF PRUSSIA, PA 19401
8. Single event drain burnout testing by Titus, J.L., et al of NWSC, Crane, IN at Brookhaven Nat. Lab. Dec 11-14, 1989
9. Neutron derivation, INTERSIL Application note AN-8831, Oct. 1988

Typical Performance Characteristics

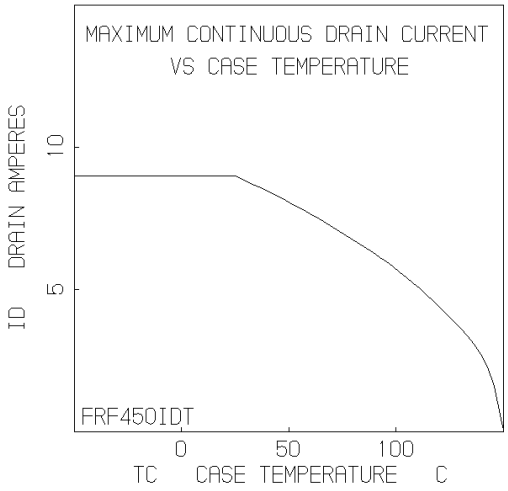

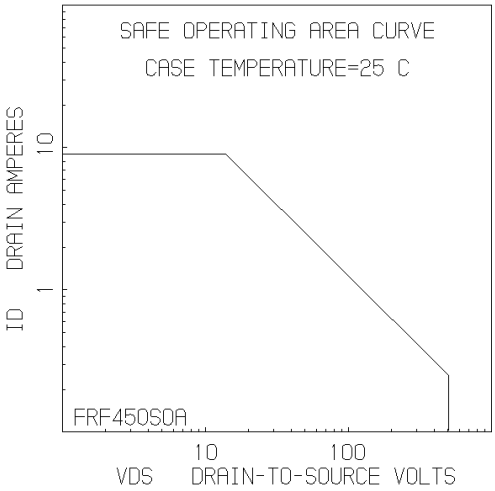

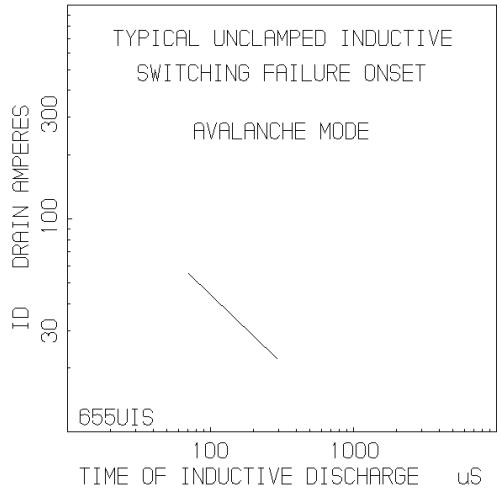

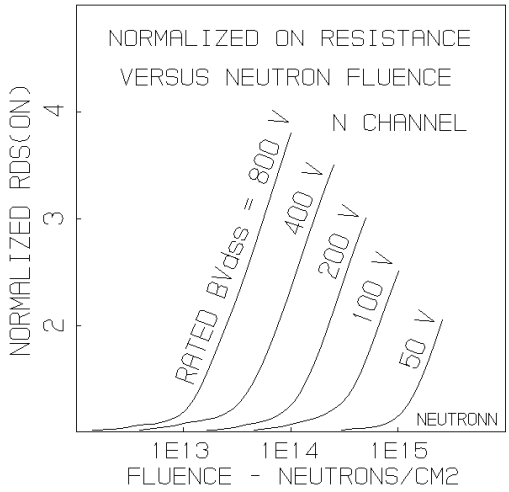

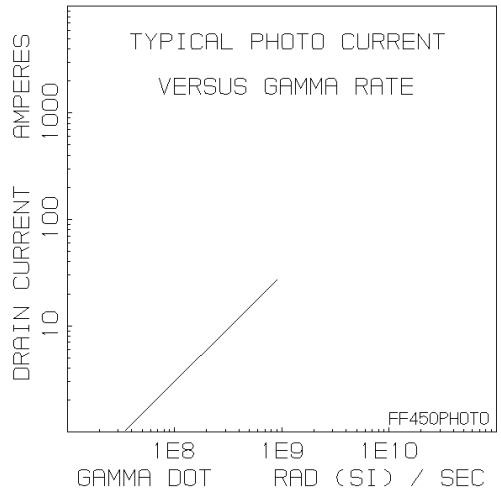

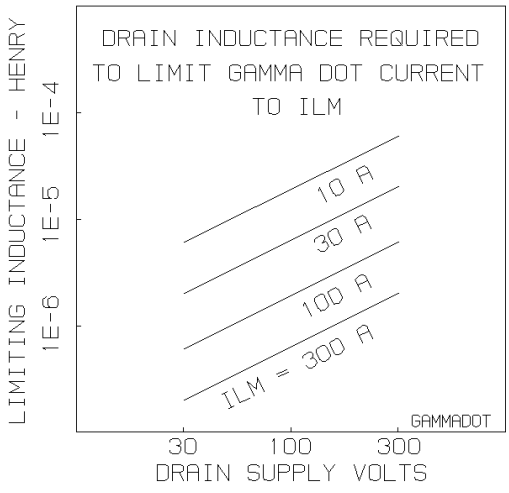

Rad Hard Data Packages - Intersil Power Transistors

TXV Equivalent

1. Rad Hard TXV Equivalent - Standard Data Package

A. Certificate of Compliance

B. Assembly Flow Chart

C. Preconditioning - Attributes Data Sheet

D. Group A - Attributes Data Sheet

E. Group B - Attributes Data Sheet

F. Group C - Attributes Data Sheet

G. Group D - Attributes Data Sheet

2. Rad Hard TXV Equivalent - Optional Data Package

A. Certificate of Compliance

B. Assembly Flow Chart

C. Preconditioning
- Attributes Data Sheet
- Precondition Lot Traveler
- Pre and Post Burn-In Read and Record Data

D. Group A
- Attributes Data Sheet
- Group A Lot Traveler

E. Group B
- Attributes Data Sheet
- Group B Lot Traveler
- Pre and Post Read and Record Data for Intermittent Operating Life (Subgroup B3)
- Bond Strength Data (Subgroup B3)
- Pre and Post High Temperature Operating Life Read and Record Data (Subgroup B6)

F. Group C
- Attributes Data Sheet
- Group C Lot Traveler
- Pre and Post Read and Record Data for Intermittent Operating Life (Subgroup C6)
- Bond Strength Data (Subgroup C6)

G. Group D
- Attributes Data Sheet
- Group D Lot Traveler
- Pre and Post RAD Read and Record Data

Class S - Equivalents

1. Rad Hard "S" Equivalent - Standard Data Package

A. Certificate of Compliance

B. Serialization Records

C. Assembly Flow Chart

D. SEM Photos and Report

E. Preconditioning
Attributes Data Sheet
Hi-Rel Lot Traveler
HTRB - Hi Temp Gate Stress Post Reverse Bias Data and Delta Data
HTRB - Hi Temp Drain Stress Post Reverse Bias Delta Data

F. Group A - Attributes Data Sheet

G. Group B - Attributes Data Sheet

H. Group C - Attributes Data Sheet

I. Group D - Attributes Data Sheet

2. Rad Hard Max. "S" Equivalent - Optional Data Package

A. Certificate of Compliance

B. Serialization Records

C. Assembly Flow Chart

D. SEM Photos and Report

E. Preconditioning
- Attributes Data Sheet
- Hi-Rel Lot Traveler
- HTRB - Hi Temp Gate Stress Post Reverse Bias Data and Delta Data
- HTRB - Hi Temp Drain Stress Post Reverse Bias Delta Data
- X-Ray and X-Ray Report

F. Group A
- Attributes Data Sheet
- Hi-Rel Lot Traveler
- Subgroups A2, A3, A4, A5 and A7 Data

G. Group B
- Attributes Data Sheet
- Hi-Rel Lot Traveler
- Subgroups B1, B3, B4, B5 and B6 Data

H. Group C
- Attributes Data Sheet
- Hi-Rel Lot Traveler
- Subgroups C1, C2, C3 and C6 Data

I. Group D
- Attributes Data Sheet
- Hi-Rel Lot Traveler
- Pre and Post Radiation Data

TO-254AA

3 LEAD JEDEC TO-254AA HERMETIC METAL PACKAGE

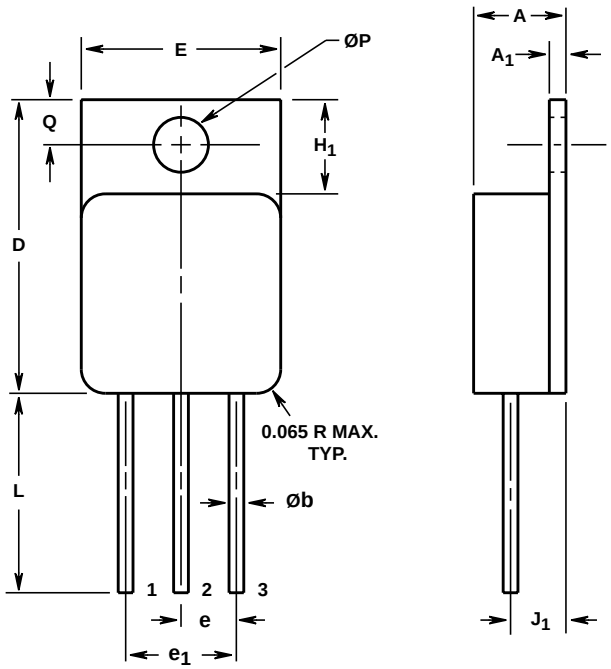

SYMBOL	INCHES		MILLIMETERS		NOTES
	MIN	MAX	MIN	MAX	
A	0.249	0.260	6.33	6.60	-
A_1	0.040	0.050	1.02	1.27	-
Øb	0.035	0.045	0.89	1.14	2, 3
D	0.790	0.800	20.07	20.32	-
E	0.535	0.545	13.59	13.84	-
e	0.150 TYP		3.81 TYP		4
e_1	0.300 BSC		7.62 BSC		4
H_1	0.245	0.265	6.23	6.73	-
J_1	0.140	0.160	3.56	4.06	4
L	0.520	0.560	13.21	14.22	-
ØP	0.139	0.149	3.54	3.78	-
Q	0.110	0.130	2.80	3.30	-

NOTES:

1. These dimensions are within allowable dimensions of Rev. A of JEDEC outline TO-254AA dated 11-86.
2. Add typically 0.002 inches (0.05mm) for solder coating.
3. Lead dimension (without solder).
4. Position of lead to be measured 0.250 inches (6.35mm) from bottom of dimension D.
5. Die to base BeO isolated, terminals to case ceramic isolated.
6. Controlling dimension: Inch.
7. Revision 1 dated 1-93.

WARNING!

BERYLLIA WARNING PER MIL-S-19500

Packages containing beryllium oxide (BeO) shall not be ground, machined, sandblasted, or subject to any mechanical operation which will produce dust containing any beryllium compound. Packages containing any beryllium compound shall not be subjected to any chemical process (etching, etc.) which will produce fumes containing beryllium or its' compounds.

All Intersil semiconductor products are manufactured, assembled and tested under **ISO9000** quality systems certification.

Intersil products are sold by description only. Intersil Corporation reserves the right to make changes in circuit design and/or specifications at any time without notice. Accordingly, the reader is cautioned to verify that data sheets are current before placing orders. Information furnished by Intersil is believed to be accurate and reliable. However, no responsibility is assumed by Intersil or its subsidiaries for its use; nor for any infringements of patents or other rights of third parties which may result from its use. No license is granted by implication or otherwise under any patent or patent rights of Intersil or its subsidiaries.

For information regarding Intersil Corporation and its products, see web site **http://www.intersil.com**

Sales Office Headquarters

NORTH AMERICA
Intersil Corporation
P. O. Box 883, Mail Stop 53-204
Melbourne, FL 32902
TEL: (407) 724-7000
FAX: (407) 724-7240

EUROPE
Intersil SA
Mercure Center
100, Rue de la Fusee
1130 Brussels, Belgium
TEL: (32) 2.724.2111
FAX: (32) 2.724.22.05

ASIA
Intersil (Taiwan) Ltd.
Taiwan Limited
7F-6, No. 101 Fu Hsing North Road
Taipei, Taiwan
Republic of China
TEL: (886) 2 2716 9310
FAX: (886) 2 2715 3029