Freescale Semiconductor, Inc.
User's Guide

Document Number: FRDMKE06UG
Rev. 0, 03/2014

Freedom KE06 User's Guide

1 FRDM-KE06 hardware overview

The FRDM-KE06 Freedom development platform microcontroller board is assembled with the following features:

- Kinetis E series KE06 MCU in an 80-pin LQFP package
- On-board serial and debug adapter (OpenSDA)
- I/O headers for easy access to MCU I/O pins
- Freescale inertial sensor, MMA8451Q
- Reset push button
- RGB LED
- Infrared communication
- One thermistor
- Motor control function for simple BLDC motor control on APMOTOR56F8000E
- CAN communication

Figure 1 shows a block diagram of the FRDM-KE06 board.

Contents

1. FRDM-KE06 hardware overview 1
2. FRDM-KE06 hardware description 2
   2.1. Power supply 2
3. Serial and Debug Adapter (OpenSDA) . . 4
   3.1. Debugging interface 5
   3.2. Virtual serial port 6
   3.3. KE06 microcontroller 6
   3.4. Thermistor 7
   3.5. Infrared port 8
   3.6. Key buttons 8
   3.7. Three-axis accelerometer 9
   3.8. RGB LED 10
   3.9. CAN 11
   3.10. Input/Output headers 12
   3.11. Arduino compatibility 13

© 2014 Freescale Semiconductor, Inc.

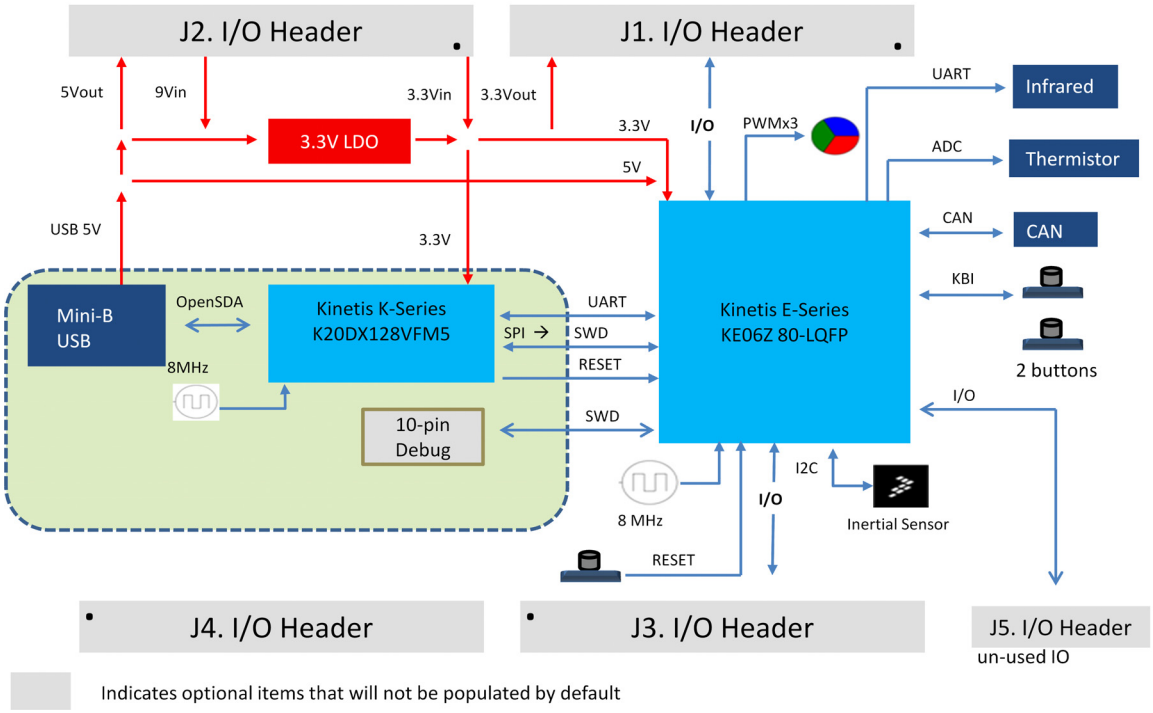

Figure 1. FRDM-KE06 block diagram

The FRDM-KE06 features two microcontrollers, the target MCU and a serial and debug adapter (OpenSDA) MCU. The target MCU is a Kinetis E series KE06 family device. The OpenSDA MCU is a Kinetis K series K20 family device, the K20DX128VFM5.

2 FRDM-KE06 hardware description

2.1 Power supply

The FRDM-KE06 offers a design with multiple power supply options. It can be powered from the USB connector, the V_{IN} pin on the I/O header, an off-board 1.71-3.6V supply from the 3.3V pin on the I/O header or 3.3V from motor control board. The USB and V_{IN} supplies are regulated on-board using a 3.3V linear regulator to produce the main power supply. The other two sources are not regulated on-board. Note that KE06 on FRDM board can be powered by 5 V or 3.3 V.

The following figure shows the schematic drawing for the power supply inputs and the on-board voltage regulator.

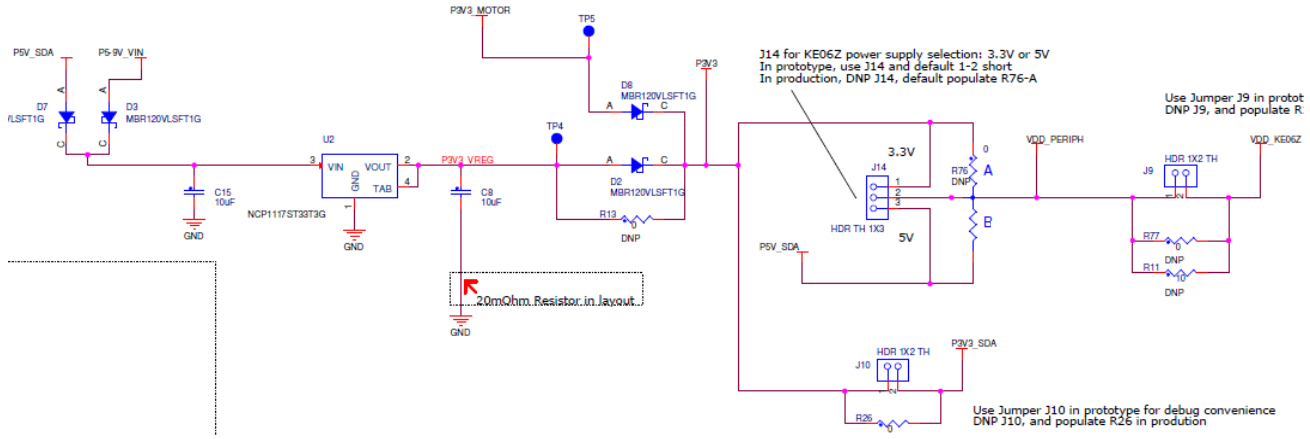

Figure 2. FRDM-KE06 power supply

Table 1 provides the operational details and requirements for the power supplies.

Table 1. Power supply requirements

Supply source	Valid range	OpenSDA operational?	Regulated on-board?
OpenSDA USB (J6)	5V	Yes	Yes
V_{IN} Pin on I/O header	4.3-9V	Yes	Yes
3.3V Pin on I/O header	1.71-3.6V	Yes	No
3.3V Pin on motor control header	3.3V	Yes	No

Note that the OpenSDA circuit is only operational when a USB cable is connected and supplying power to J6. However, the protection circuitry is in place to allow multiple sources to be powered at once.

Table 2. Power supplies

Power supply name	Description
VDD_PERIPH	Peripheral power supply, including RGB LED, Key buttons, infrared, thermistor, reset circuit. J14 Pin1&2 connected, 3.3V power supply; J14 Pin2&3 connected, 5V power supply.
VDD_KE06	KE06 MCU power supply. Header J9 provides a convenient means for KE06 energy consumption measurements. Header J14 for KE06 power supply selection: 3.3V or 5V. J14 Pin1&2 connected, 3.3V power supply, J14 Pin2&3 connected, 5V power supply.
P3V3_SDA	OpenSDA circuit power supply. Can be 3.3V only. Header J10 provides a convenient means for K20 energy consumption measurements.
P5V_SDA INPUT	[J6 Pin1] Input 5V Power supplied from the OpenSDA USB connector.
P5-9V_VIN INPUT	[J4 Pin16] Power supplied from the V_{IN} pin of the I/O headers.
P3V3_MOTOR INPUT	[J2 Pin13] Input 3.3V power supplied from motor control header.
P5V_USB OUTPUT	[J4 Pin10] Output 5V to the I/O headers. Sourced from J6 USB (P5V_SDA) supply through a back drive protection Schottky diode.

Notes:

1. J9 and J10 are not populated by default on the production version. The two pins of these headers are shorted together by 0 ohm resistor R12 and R26 on the PCB. To measure the energy consumption of either the KE06 or the OpenSDA MCU, the 0 ohm resistor between these pins must first be cut. A current probe or a shunt resistor and voltage meter can then be applied to measure the energy consumption on these rails. When the MCU current measurement is done, this 0 ohm resistor can be soldered on again.
2. To better get ADC accuracy on KE06, it is recommended that a 0 ohm resistor R13 be soldered on. Ensure there is no power supply from P3V3_MOTOR and P3V3 sourced from I/O headers.

3 Serial and Debug Adapter (OpenSDA)

OpenSDA is an open-standard serial and debug adapter. It bridges serial and debug communications between a USB host and an embedded target processor as shown in Figure 3.

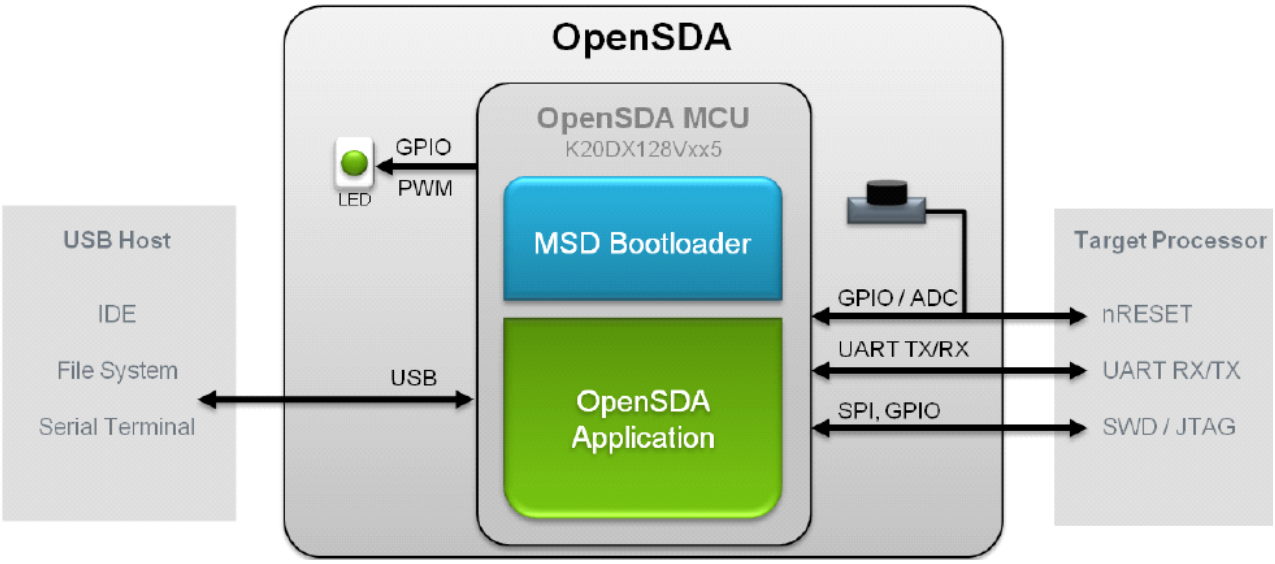

Figure 3. OpenSDA block diagram

OpenSDA is managed by a Kinetis K20 MCU built on the ARM® Cortex™-M4 core. The OpenSDA circuit includes a status LED (D4) and a reset pushbutton (SW1). The pushbutton asserts the reset signal to the KE06 target MCU. It can also be used to place the OpenSDA circuit into Bootloader mode by holding down the reset pushbutton while plugging the USB cable to USB connector J6. Once the OpenSDA enters bootloader mode, other OpenSDA applications such as debug app can be programmed.

SPI and GPIO signals provide an interface to the SWD debug port of the KE06. Additionally, signal connections are available to implement a UART serial channel. The OpenSDA circuit receives power when the USB connector J6 is plugged into a USB host.

3.1 Debugging interface

Signals with SPI and GPIO capability are used to connect directly to the SWD of the KE06. These signals are also brought out to a standard 10-pin (0.05”) Cortex Debug connector (J7) as shown in Figure 4. It is possible to isolate the KE06 MCU from the OpenSDA circuit and use J7 to connect to an off-board MCU. To accomplish this, cut the 0 ohm resistor R58. This will disconnect the SWD_CLK pin to the KE06 so that it will not interfere with the communications to an off-board MCU connected to J7.

When KE06 on FRDM board is 5V powered, and the OpenSDA is power off, there need to connect an external debugger to debug KE06 on board.

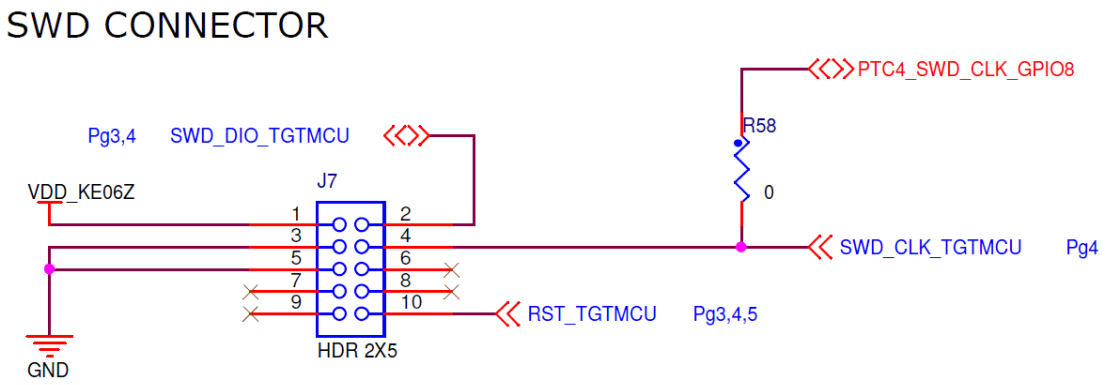

Figure 4. SWD debug connector to KE06

3.2 Virtual serial port

A serial port connection is available between the OpenSDA MCU and UART1 pin PTC7 (TXD1) and PTC6 (RXD1) of KE06. Several of the default OpenSDA applications provided by Freescale, including the MSD Flash Programmer and the P&E Debug Application, provide a USB Communications Device Class (CDC) interface that bridges serial communications between the USB host and this serial interface on the KE06.

3.3 KE06 microcontroller

3.3.1 Clock source

The Kinetis KE06 microcontrollers feature an on-chip oscillator compatible with two ranges of input crystal or resonator frequencies: 32 kHz (low frequency mode), 4-20 MHz (high frequency mode).

The KE06 on the FRDM-KE06 is clocked from an 8 MHz crystal.

3.3.2 Serial port

The serial port interface signals used with OpenSDA are UART1 pin PTC7 (TXD1) and PTC6 (RXD1). These signals are also connected to I/O header J1.

3.3.3 Reset

The PTA5/RESET signal on the KE06 is connected externally to a pushbutton SW1. The reset button can be used to force an external reset event in the target MCU. The reset button can also be used to force the OpenSDA circuit into bootloader mode when plugging the USB cable to J6. See Section 3, “Serial and Debug Adapter (OpenSDA)” section for more details.

3.3.4 Debug

The sole debug interface on all Kinetis E Series devices is a Serial Wire Debug (SWD) port. The primary controller of this interface on the FRDM-KE06 is the onboard OpenSDA circuit. However, a 2x5-pin (0.05”) Cortex Debug connector, J7, provides access to the SWD signals for the KE06 MCU. The following table shows SWD connector signals description for KE06:

Table 3. ARM JTAG/SWD mini connector description

Pin	Function	Connection to KE06
1	VTref	3.3V or 5V KE06 power supply (VDD_KE06)
2	SWDIO/TMS	PTA4/SWD_DIO
3	GND	GND
4	SWDCLK/TCK	PTC4/SWD_CLK
5	GND	GND
6	SWO/TDO	NC
7	NC	NC
8	TDI	NC
9	NC	NC
10	RESET	PTA5/RESET

3.4 Thermistor

One thermistor (RT1) is connected to two ADC inputs (PTF4/ADP12, PTF5/ADP13) of KE06 for evaluating the ADC module.

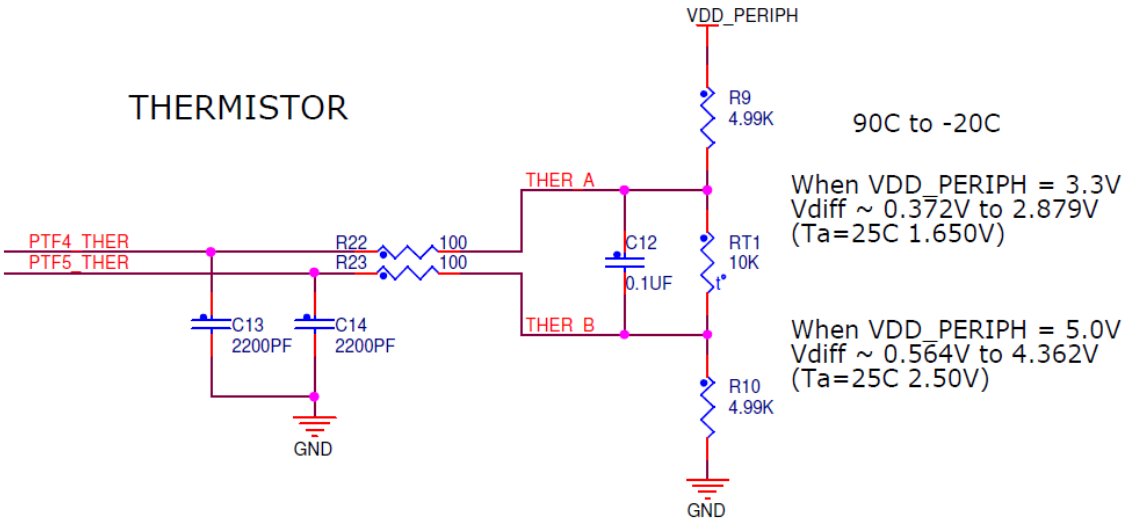

Figure 5. Thermistor connection

3.5 Infrared port

One infrared Rx port and one Tx port (as shown in the following figure) are connected to ACMP0 input pin (ACMP0_IN1) and UART0 TXD0 pin of KE06 to demonstrate the capability of SCI0 modulated by a flextimer to generate infrared signals and use ACMP0 as a filter to receive the SCI data via infrared signal.

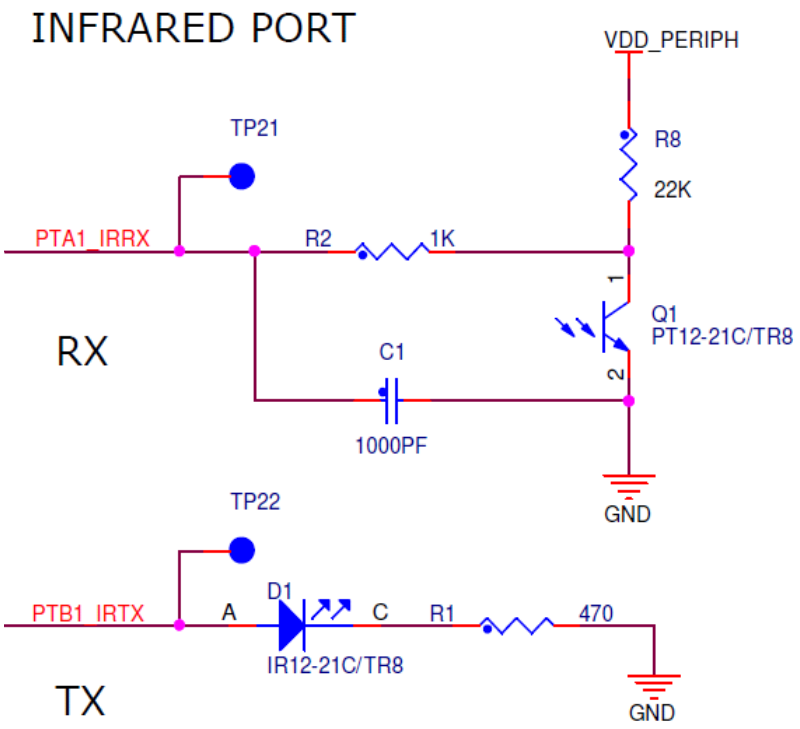

Figure 6. Infrared connection

3.6 Key buttons

Two key buttons are connected to PTH3/4 to demonstrate KBI function of KE06, which can capture both falling edge and rising edge of key button input, as shown in the following figure.

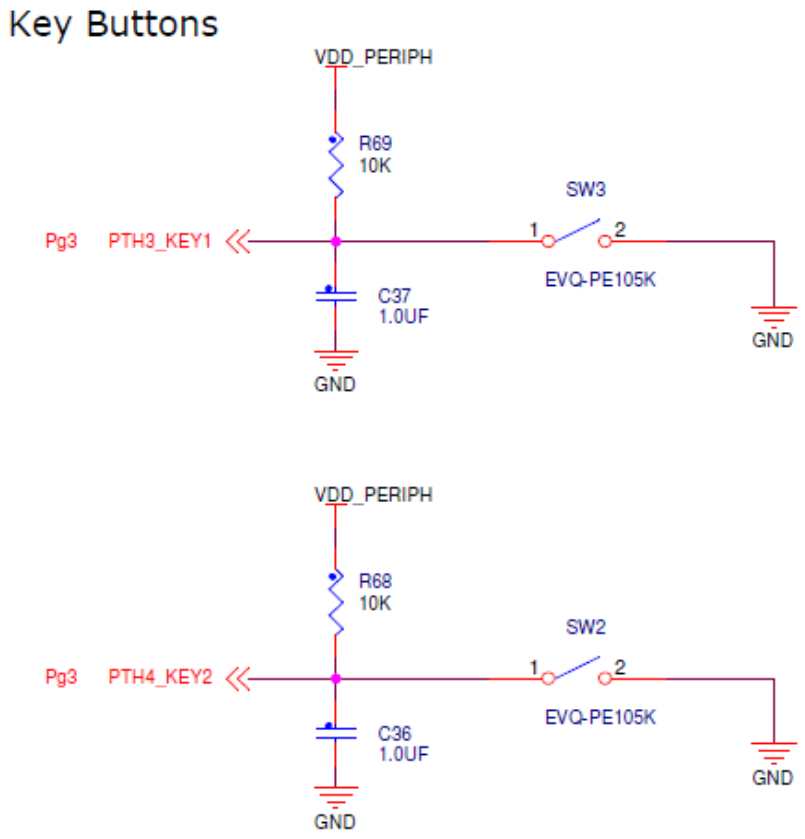

Figure 7. Key buttons connection

3.7 Three-axis accelerometer

A Freescale MMA8451Q low power, three-axis accelerometer is interfaced through an I^2C bus and two GPIO signals as shown in the following table. By default, the I^2C address is 0x1D (SA0 pulled high).

Table 4. Accelerometer signal connections

MMA8451Q	KE06
SCL	PTA3
SDA	PTA2
INT1	PTD4
INT2	PTD3

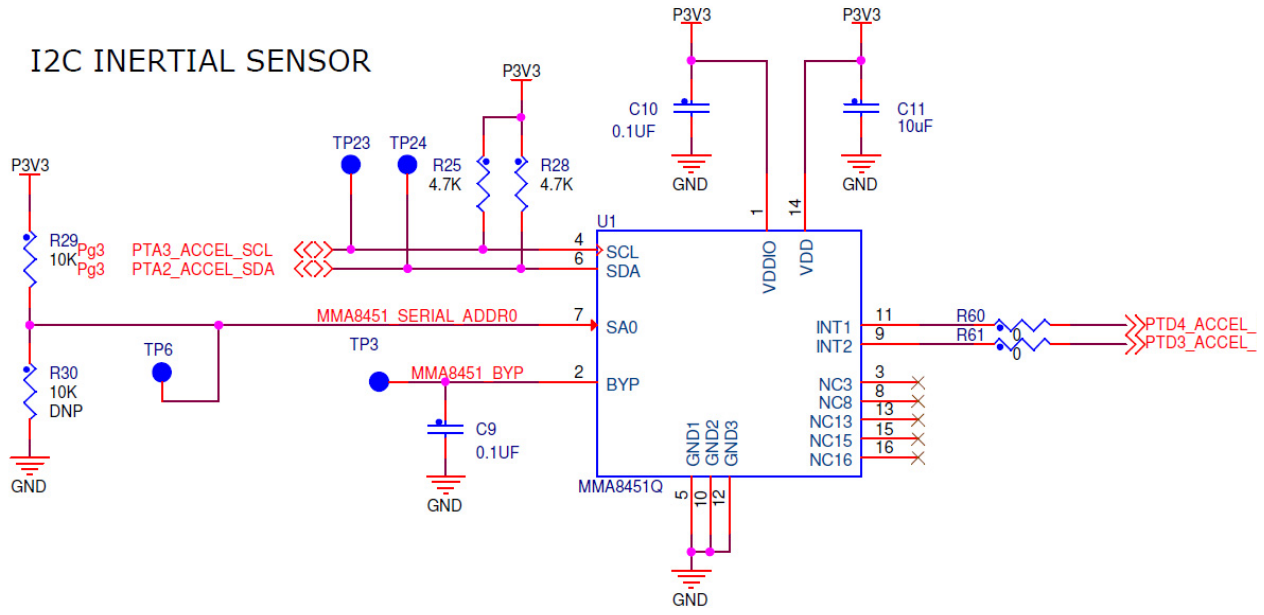

Figure 8. Accelerometer connection

3.8 RGB LED

Three PWM-capable pins are connected to a red, green, blue LED. The signal connections are shown in the table below.

Table 5. RGB LED Signal Connections

RGB LED	KE06
Red Cathode	PTG5/FTM2CH3
Green Cathode	PTG6/FTM2CH4
Blue Cathode	PTG7/FTM2CH5

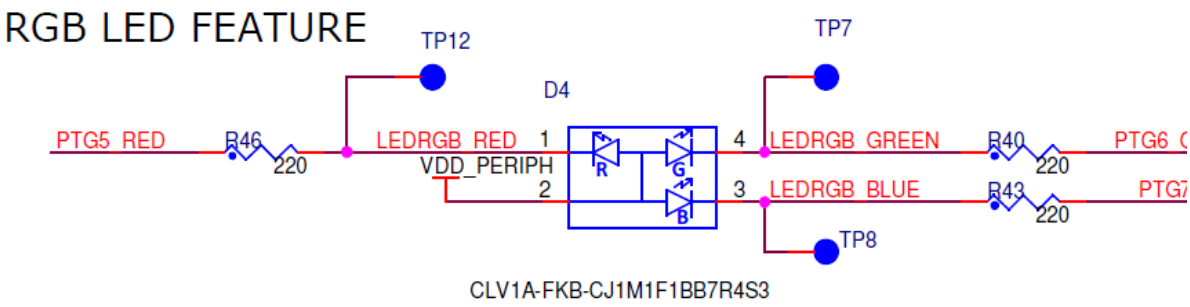

Figure 9. RGB LED connection

3.9 CAN

The CAN phy on KE06 FRDM board is 3.3 V powered.

Table 6. CAN signal connection

CAN Phy	KE06
D	CAN_TX
R	CAN_RX

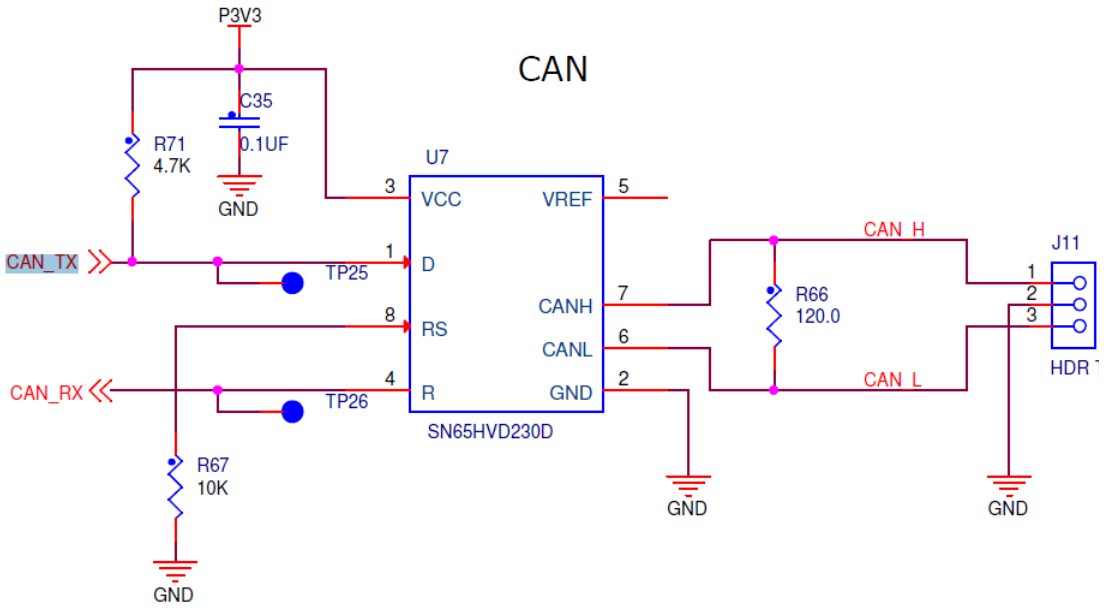

Figure 10. CAN

3.10 Input/Output headers

The KE06 microcontroller is packaged in an 80-pin LQFP. Some pins are utilized in on-board circuitry, but many are directly connected to one of four I/O headers (J1, J2, J3, J4 and J5). J1 and J2 also function as motor control headers to provide access to a motor control board such as simple BLDC motor driving board APMOTOR56F8000E.

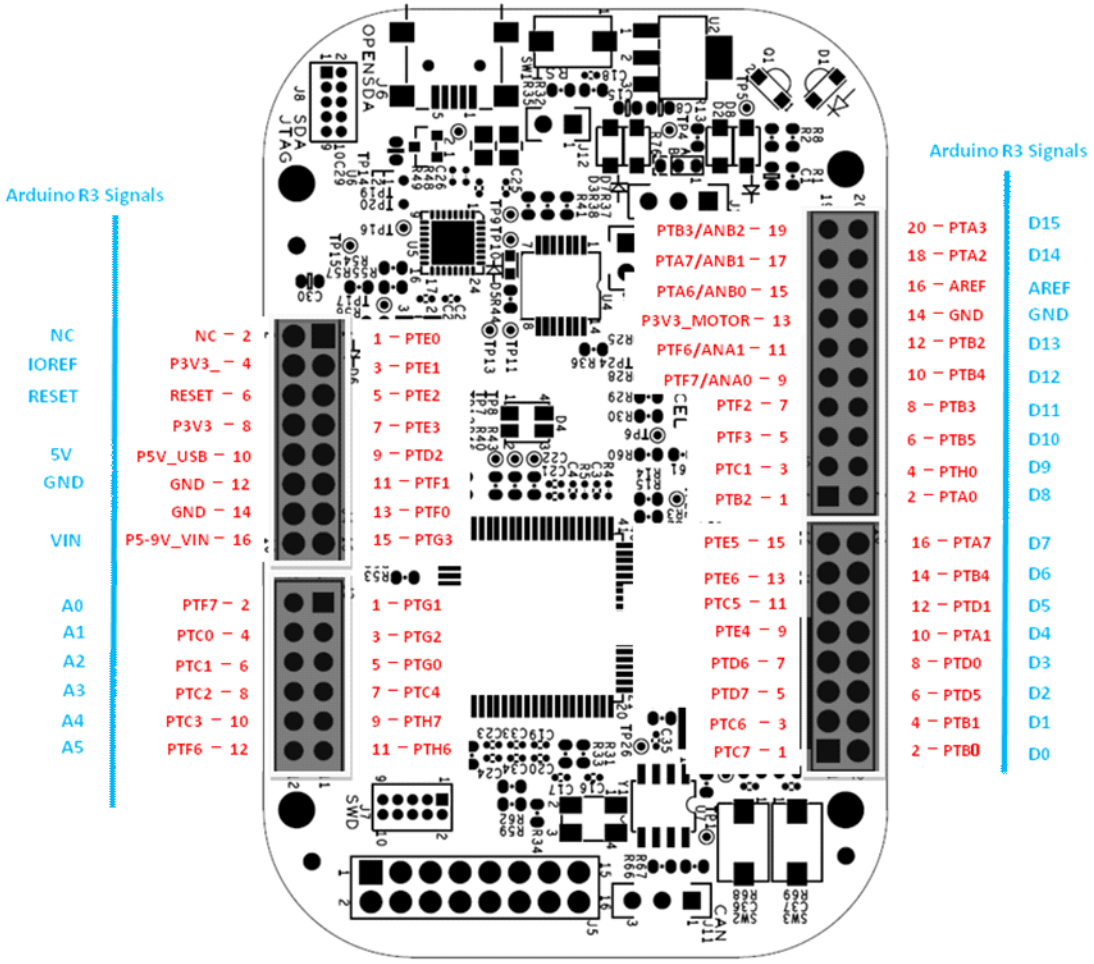

Figure 11. I/O headers

3.11 Arduino compatibility

The I/O headers on the FRDM-KE06 are arranged to allow compatibility with peripheral boards (known as shields) that connect to Arduino and Arduino-compatible microcontroller boards. The pins on the headers share the same mechanical spacing and placement as the I/O headers on the Arduino Uno Revision 3 board design. See Figure 11 for compatible signals.

How to Reach Us:

Home Page:
freescale.com

Web Support:
freescale.com/support

Information in this document is provided solely to enable system and software implementers to use Freescale products. There are no express or implied copyright licenses granted hereunder to design or fabricate any integrated circuits based on the information in this document.

Freescale reserves the right to make changes without further notice to any products herein. Freescale makes no warranty, representation, or guarantee regarding the suitability of its products for any particular purpose, nor does Freescale assume any liability arising out of the application or use of any product or circuit, and specifically disclaims any and all liability, including without limitation consequential or incidental damages. “Typical” parameters that may be provided in Freescale data sheets and/or specifications can and do vary in different applications, and actual performance may vary over time. All operating parameters, including “typicals,” must be validated for each customer application by customer’s technical experts. Freescale does not convey any license under its patent rights nor the rights of others. Freescale sells products pursuant to standard terms and conditions of sale, which can be found at the following address: freescale.com/SalesTermsandConditions.

Freescale, the Freescale logo, and Kinetis are trademarks of Freescale Semiconductor, Inc., Reg. U.S. Pat. & Tm. Off. All other product or service names are the property of their respective owners. ARM and Cortex are registered trademarks of ARM Limited (or its subsidiaries) in the EU and/or elsewhere. All rights reserved.
© 2014 Freescale Semiconductor, Inc.

Document Number: FRDMKE06UG
Rev. 0
03/2014