Freescale Semiconductor, Inc.
User's Guide

Document Number: FRDMKL82ZUG

Rev. 0, 01/2016

FRDM-KL82Z User's Guide

1. Introduction

The Freescale Freedom development platform is a set of software and hardware tools for evaluation and development. It is an ideal tool for the rapid prototyping of microcontroller-based applications.

The FRDM-KL82Z supports the power supply voltage ranging from 1.71 V to 3.6 V. It features a KL82Z, a device boasting up to 128 KB Flash and 96 KB SRAM, and numerous analog and digital peripherals. In addition, it also offers QSPI interface to expand program memory and USB FS 2.0 without requiring an external crystal.

The FRDM-KL82Z includes the Freescale open standard embedded serial and debugging adapter known as OpenSDA. This circuit offers the user several options for serial communications, flash programming, and run control debugging.

The FRDM-KL82Z hardware provides a broad range of expansion board options. The MCU operates normally when the board power is 3.3 V or 1.8 V. The on-board interfaces include an RGB LED, which works only when VDD is 3.3 V, a 6-axis digital sensor (FXOS8700CQ, combining a 3D accelerometer and 3D magnetometer), two Touch Sensing Interface (TSI) touch pads.

Contents

1. Introduction 1
   1.1. Features 2
   1.2. Getting started 4
2. Contents 4
3. FRDM-KL82Z hardware description 4
   3.1. Power supply 4
   3.2. Serial and Debugging Adapter version 2 (OpenSDAv2) 5
   3.3. Microcontroller 7
   3.4. Touch interface 10
   3.5. I2C Inertial Sensor: 6-axis accelerometer and magnetometer 10
   3.6. RGB LED 11
   3.7. Flexio/Camera header 12
   3.8. Analog reference voltage 12
   3.9. Input/output headers 12
4. Jumper table 14
5. Reference Documents 16

© 2016 Freescale Semiconductor, Inc. All rights reserved.

There are many software development tool options available to the user. Choices include Kinetis Design Studio (KDS), IAR Embedded Workbench, and Keil MDK featuring the µVision IDE.

All of these features enable users to rapidly prototype many embedded designs: a powerful microcontroller built on a very low-power core and SOC platform, easy-access to I/O with a large ecosystem of compatible hardware, a flexible programming and debugging interface, and a large ecosystem of software development environments.

1.1. Features

The FRDM-KL82Z hardware is a Freescale Freedom development platform assembled with the following features:

- Board power selected with 3.3 V or 1.8 V MCU operation
- MKL82Z128VLK7 MCU (96 MHz, 128 KB Flash, 96 KB SRAM, 80 LQFP package) (U16)
- Accelerometer and magnetometer, FXOS8700CQ (U6)
- 1x128 Mbit (16 MB) on-board QuadSPI memory (U11)
- Flexible power supply options: USB, coin cell battery, and external source
- Two TSI touch pads (E1 and E2)
- Reset push button (SW1)
- Two mechanical push buttons: NMI and LLWU buttons (SW2, SW3)
- RGB LED (D3)
- Stand-alone full-speed USB host and device functionality
- One interface for camera connection
- One RF interface
- One Bluetooth interface

The FRDM-KL82Z features two MCUs:

- The target MCU is the MKL82Z128VLK7.
- The OpenSDA MCU is the MK20DX128VFM5.

Figure 1 shows the primary components and their location on the hardware assemble. Figure 2 shows a block diagram of the FRDM-KL82Z platform.

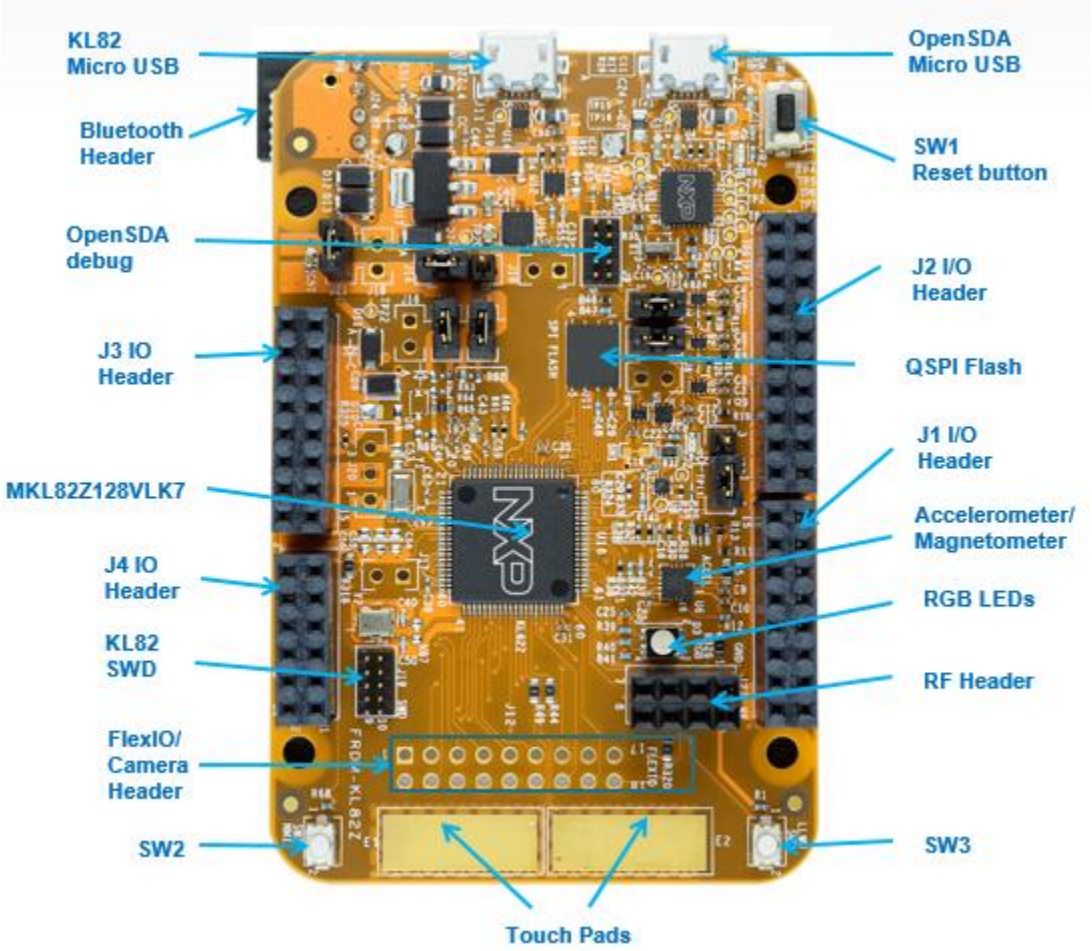

Figure 1. FRDM-KL82Z feature call-outs

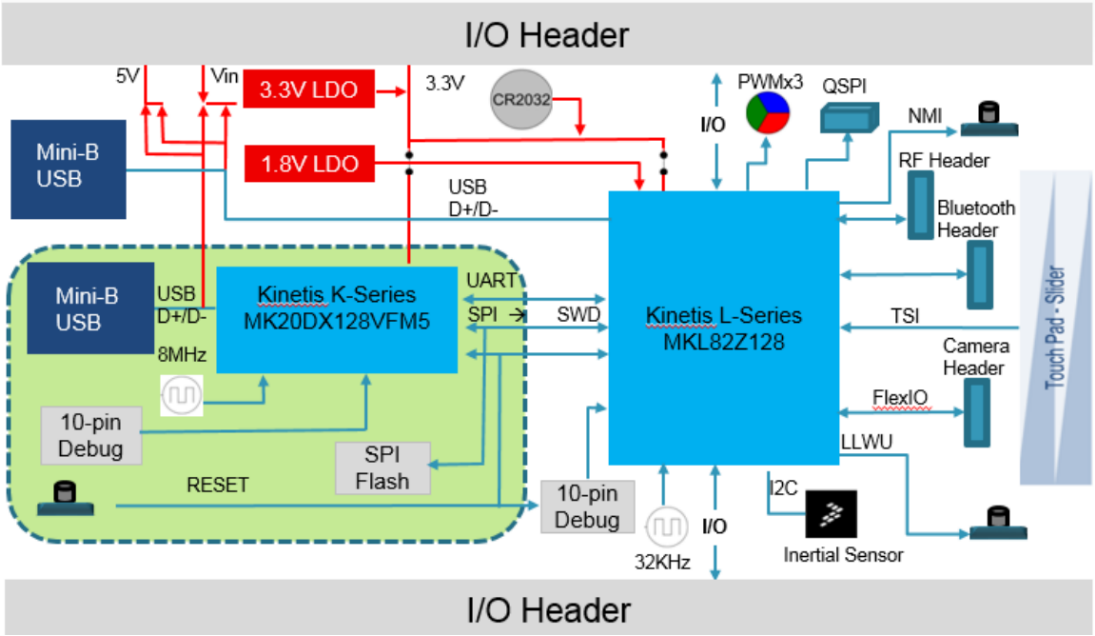

Figure 2. FRDM-KL82Z block diagram

1.2. Getting started

For step-by-step instructions for getting started with the freedom board, see the FRDM-KL82Z Quick Start Package. For the Quick Start Package and software lab guides, see the "Jump Start Your Design" section at nxp.com/FRDM-KL82Z.

2. Contents

The FRDM-KL82Z includes:

- FRDM-KL82Z for board assembly
- Quick Start Guide
- USB A to micro-B cable for debugging interface and power supply
- USB A to micro-B cable for MKL82Z128VLK7 USB interface

3. FRDM-KL82Z hardware description

The FRDM-KL82Z is a MCU module featuring MKL82Z128VLK7 and ARM® Cortex®-M0+ based MCU with 128 KB on-chip flash, 96 KB on-chip SRAM, and USB controllers in an 80 pin LQFP package. It has a maximum core operating frequency of 96 MHz. It can also operate as a stand-alone module. An on-board debugging circuit, OpenSDA, provides the SWD debugging interface and power supply input through a single USB Micro-AB connector. The following sections describe the hardware in more details.

3.1. Power supply

The FRDM-KL82Z offers a design with multiple power supply options. It can be powered from the USB connector, coin battery on the board or an off-board supply. The USB and VIN supplies are regulated on-board using a 3.3 V linear regulator and a 1.8 V linear regulator to produce the main power supply. The coin battery source is not regulated on-board.

Figure 3 shows the schematic drawing for the power supply inputs and the on-board voltage regulator. In addition, the regulated power can be supplied to J20 from an external source through P5-9V_VIN by populating the board with an optional voltage regulator (e.g., a 7805 style regulator) in a TO-220 package, and thus providing a high current supply to external devices. To prevent voltage sag under a high load, C53, C54, C55, and C56 should be populated with appropriately sized capacitors to match the selected regulator.

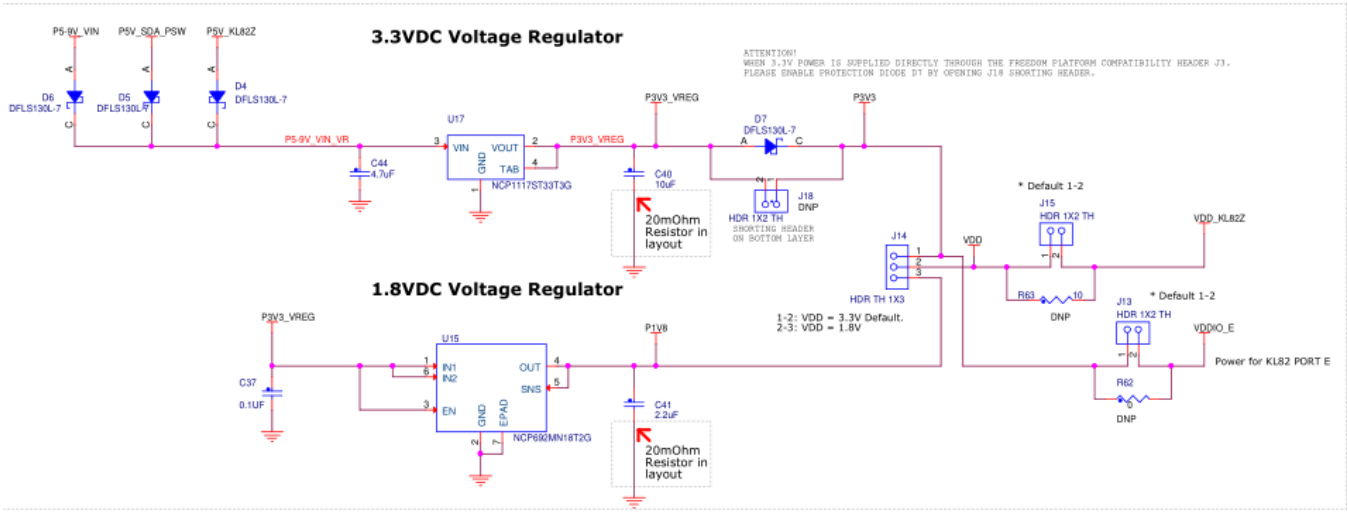

Figure 3. Power supply schematic

Table 1 provides the operational details and requirements for the power supplies.

Table 1. Tags Power supply requirements

Supply source and location	Valid range	OpenSDA operational?	Regulated on-board?
OpenSDA USB (J5)	5 V	Yes	Yes
KL82Z USB (J11)	5 V	No	Yes
P5V0-9V0_VIN (J20)	4.3 V – 9 V	No	Yes
Coin Battery (BT1)	2 V – 3.6 V	No	No

The input 5 V could be converted to 3.3 V or 1.8 V output by the on-board regulator, providing the power selection for KL82Z by J14.

Table 2 lists the detailed information.

Table 2. Power selected for KL82Z

J14 setting	Description
Close 1-2	VDD and VDDIO_E are both 3.3 V.
Close 2-3	VDD is 1.8 V, and VDDIO_E is 3.3 V.

NOTE

The OpenSDA circuit is operational only when a USB cable is connected and supplying power to J5. However, the protection circuitry is enabled to allow multiple sources to be powered at once. The 3.3 V or 1.8 V power supplied to the MCU is routed through a jumper, J15. The jumper shunt can be removed to allow the measurement of power consumed by the MCU.

3.2. Serial and Debugging Adapter version 2 (OpenSDAv2)

OpenSDAv2 is a serial and debugging adapter circuit that includes an open-source hardware design, an open-source bootloader, and debugging interface software. It bridges serial and debugging

communications between a USB host and an embedded target processor, as shown in Figure 4. The hardware circuit is based on a Freescale Kinetis MK20DX128VFM5 family MCU with 128 KB of embedded flash and an integrated USB controller. OpenSDAv2 is preloaded with the CMSIS-DAP bootloader – an open-source mass storage device (MSD) bootloader, and the CMSIS-DAP interface firmware (also known as the MBED interface), which provides an MSD flash programming interface, a virtual serial port interface, and a CMSIS-DAP debugging protocol interface. For more information on the OpenSDAv2 software, see mbed.org and github.com/mbedmicro/CMSIS-DAP.

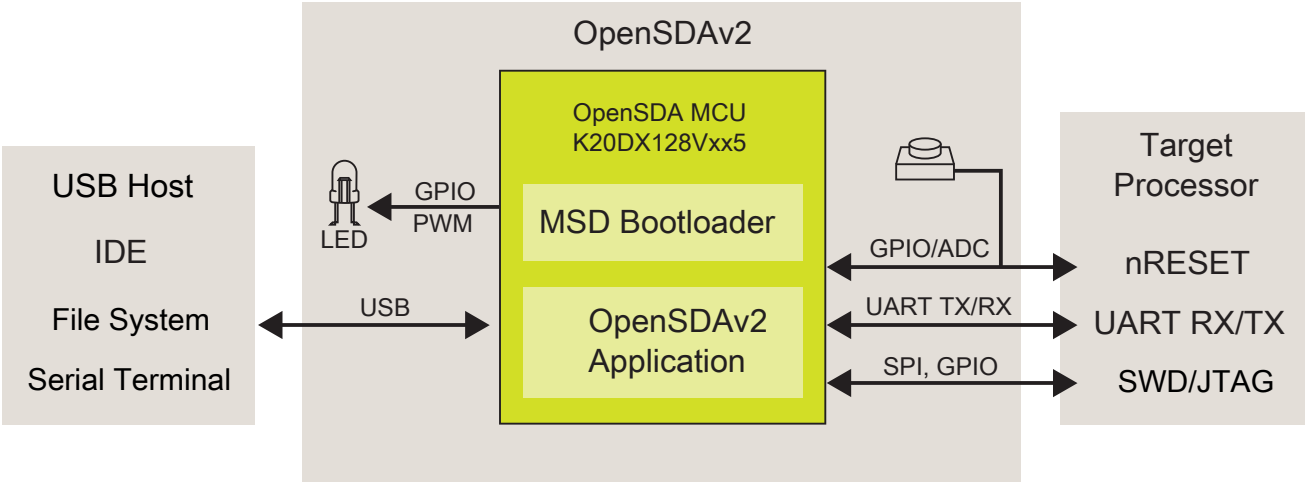

Figure 4. OpenSDAv2 high-level block diagram

OpenSDAv2 is managed by a Kinetis K20 MCU built on the ARM Cortex-M4 core. The OpenSDAv2 circuit includes a status LED (D1) and a pushbutton (SW1). The pushbutton asserts the Reset signal to the KL82 target MCU. It can also be used to place the OpenSDAv2 circuit into bootloader mode. SPI and GPIO signals provide an interface to either the SWD debugging port or the K20. Additionally, signal connections are available to implement a UART serial channel. The OpenSDAv2 circuit receives power when the USB connector J5 is plugged into a USB host.

3.2.1. Debugging interface

Signals with SPI and GPIO capability are used to connect directly to the SWD of the KL82Z. These signals are also brought out to a standard 10-pin Cortex Debugging connector (J19) as shown in Figure 5.

To isolate the KL82Z MCU from the OpenSDA circuit and use J19 to connect to an off-board MCU, cut the trace between pin1 and pin2 of J17 at the bottom layer. This disconnects the SWD_CLK pin to the KL82Z so that it interferes with the communications to an off-board MCU connected to J19. Figure 5 shows SWD connector signals description for KL82Z.

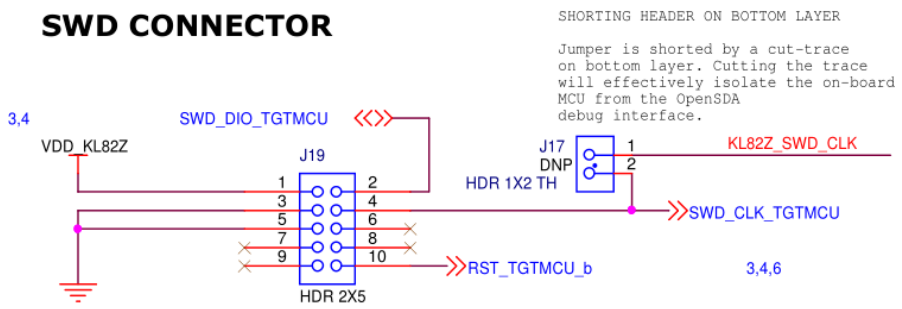

Figure 5. SWD debugging connector to KL82Z

3.2.2. Virtual serial port

A serial port connection is available between the OpenSDA MCU and pins PTB16 and PTB17 of the KL82Z. Several of the default OpenSDA applications provided by NXP, including the MSD Flash programmer and the P&E Microcomputer debugging application, provide a USB communications device class (CDC) interface that bridges serial communications between the USB host and this serial interface.

3.3. Microcontroller

The FRDM-KL82Z is an MCU module featuring the MKL82Z128VLK7, a Kinetis microcontroller with USB 2.0 full-speed OTG controller in an 80 LQFP package. The KL82 microcontroller family is part of the Kinetis portfolio of devices built around an ARM Cortex-M0+ core. For comprehensive information on the MKL82Z128VLK7 device, see the *KL82 Family Reference Manual* (KL82P121M72SF0RM).

Table 3 lists the KL82Z MCU features.

Table 3. Features of MKL82Z512VLL7

Feature	Description
Performance	• Up to 96 MHz ARM Cortex-M0+ based core
Memory and memory expansion	• 128 KB program flash memory • 96 KB SRAM • 32 KB ROM with built-in boot loader • 32 B backup register • QSPI to expand program code in external high-speed serial NOR flash memory
Analog modules	• One 16-bit SAR ADCs and One 12-bit DACs • Support selectable 16-bit, 13-bit, 11-bit, and 9-bit different output modes, or 16-bit, 12-bit, 10-bit, and 8-bit single-ended output modes • Selectable voltage reference: external or alternate
Communication interfaces	• USB full-speed 2.0 OTG controller supporting crystal-less recovery • Two 16-bit SPI modules • Three low-power UART modules supporting asynchronous operation in low-power modes • Two EMVSIM modules supporting EMV L1 compatible interface • Two I2C modules supporting up to 1 Mbit/s • One FlexIO module
Security	• 128-bit unique identification number per chip • Advanced flash security and access control

	• Hardware CRC module • Low-power trusted crypto engine supporting AES128/256,DES, 3DES, SHA256, RSA and ECC, with hardware DPA • True random number generator
Timers	• 4-channel periodic interrupt timer • Two low-power timer • One 6-channel general purpose / PWM timers • Two 2-channel general purpose timers • Independent real time clock
Human machine interface	• Low-power hardware touch sensor interface (TSI) • General-purpose input / output

For more information about the MCU, see the *Kinetis KL82 Microcontroller Data Sheet* (KL82P121M72SF0) and *KL82 Family Reference Manual* (KL82P121M72SF0RM).

3.3.1. Clock source

KL82Z starts up to the default reset clock for core/system clock. The software can enable the main external oscillator (EXTAL/XTAL). Two crystals are provided on-board for clocking the MKL82Z128VLK7 device:

- A 12 MHz crystal as the main oscillator for clocking the MCG module
- A 32.768 kHz crystal for clocking the RTC module

Internal resistor capacitor (IRC) oscillators include the following:

- 48 MHz internal resister capacitor (IRC48M) oscillator
- 4 MHz internal resister capacitor (4 MHz IRC) oscillator
- 32 kHz internal resister capacitor (32 kHz IRC) oscillator
- Low power oscillator (LPO)

3.3.2. Serial port

The primary serial port interface signals are PTB16 and PTB17. These signals are connected to both the OpenSDAs.

3.3.3. USB interface

The Kinetis KL82 microcontroller features a dual-role USB controller with on-chip full-speed and low-speed transceivers. The USB interface on the FRDM-KL82Z is configured as a full-speed USB device. J11 is the USB connector for this interface, as shown in Figure 6.

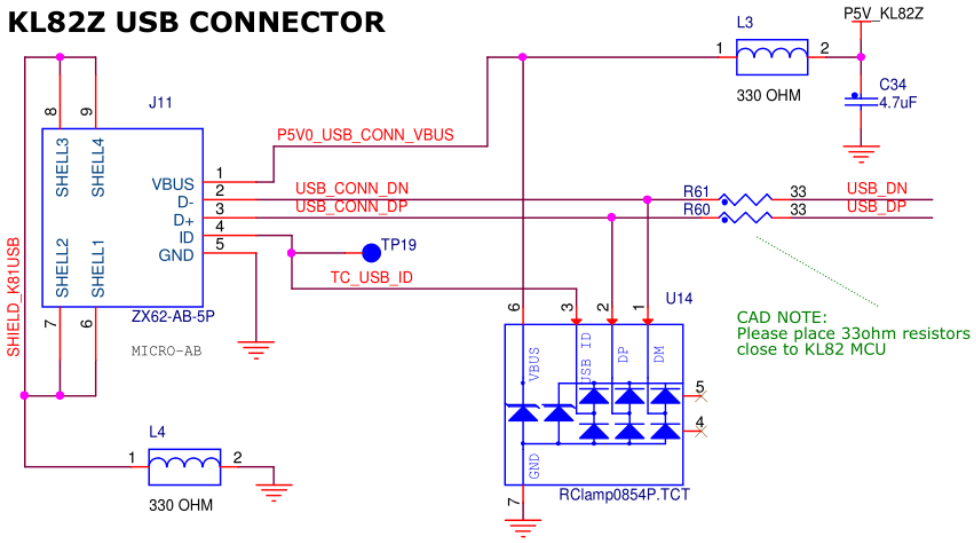

Figure 6. USB connector schematic

3.3.4. Reset

The RESET signal on the KL82Z is connected externally to a pushbutton, SW1, and also to the OpenSDA circuit. However, disconnect J8 when isolating the OpenSDA MCU from SW1 or doing power consumption test for KL82Z. Isolating the RESET line allows a more accurate measurement of the target device's power consumption in low-power mode. The reset button can be used to force an external reset event on the target MCU.

3.3.5. Debugging

The sole debugging interface on all Kinetis L series devices is a Serial Wire Debug (SWD) port. The primary controller of this interface on the FRDM-KL82Z is the on-board OpenSDA circuit. However, a 2x5-pin Cortex Debugging connector, J19, provides access to the SWD signals for the KL82Z MCU. Table 4 shows SWD connector signals description for KL82Z. Figure 7 shows the SWD connection.

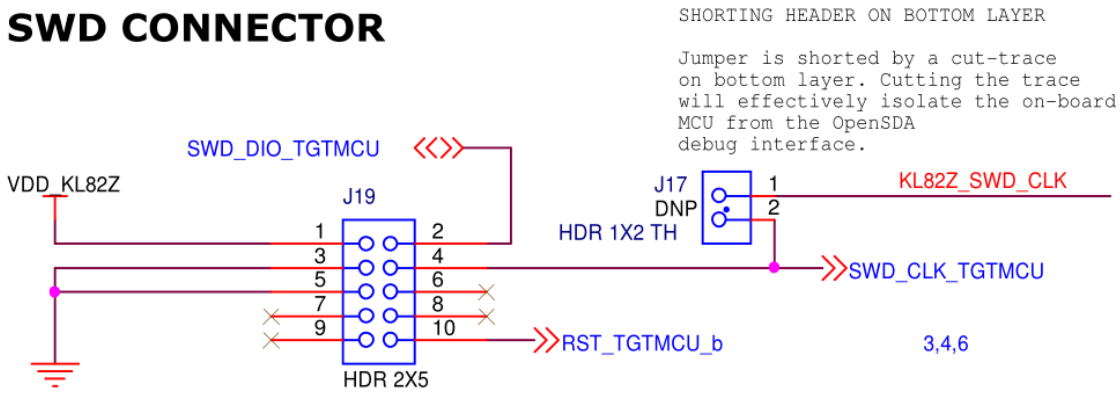

Figure 7. SWD connection

Table 4. ARM JTAG/SWD mini connector description

Pin	Function	Connection to KL82Z
1	VTref	VDD_KL82Z
2	SWDIO/TMS	PTA3
3	GND	GND
4	SWDCLK/TCK	PTA0
5	GND	GND
6	SWO/TDO	NC
7	NC	NC
8	TDI	NC
9	NC	NC
10	RESET	RESET_b

3.4. Touch interface

The Touch Sensing Interface (TSI) module of the Kinetis microcontrollers provides capacitive touch-sensing detection with high sensitivity and enhanced robustness. Each TSI pin implements the capacitive measurement of an electrode. There are two individual electrodes on board that simulate pushbuttons. Two pins remap to TSI signals are connected to capacitive electrodes, as shown in Figure 8.

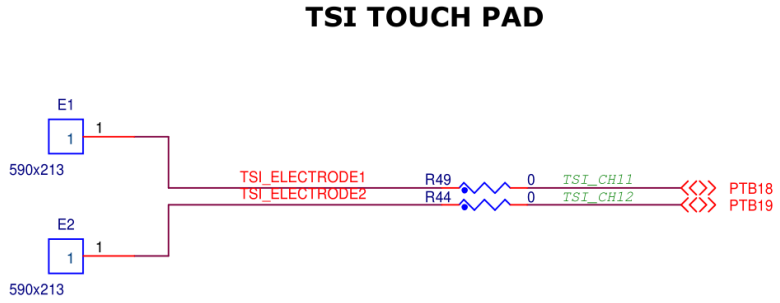

Figure 8. Touch Sensing Interface

3.5. I2C Inertial Sensor: 6-axis accelerometer and magnetometer

FXOS8700CQ is a small, low-power, 3-axis, linear accelerometer and 3-axis, magnetometer combined into a single package. The device features a selectable I2C or point-to-point SPI serial interface with 14-bit accelerometer and 16-bit magnetometer ADC resolution along with smart-embedded functions. It is interfaced through an I2C bus and two GPIO signals, as shown in Figure 9 and Table 5.

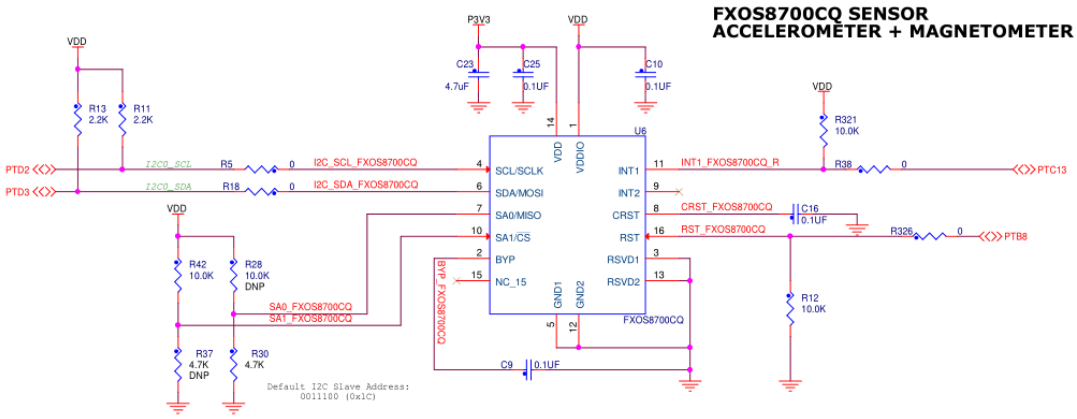

Figure 9. FXOS8700CQ schematic diagram

By default, the I2C address is 0x1C (As SA1 is pulled high and SA0 pulled low).

Table 5. Accelerometer FXOS8700CQ signal connections

FX0S8700CQ	KL82Z connection
SCL	PTD2
SDA	PTD3
INT1	PTC13
INT2	NC

3.6. RGB LED

Three KL82Z signals are connected to a red, green, and blue LED. The RGB LED only works when VDD is 3.3 V.

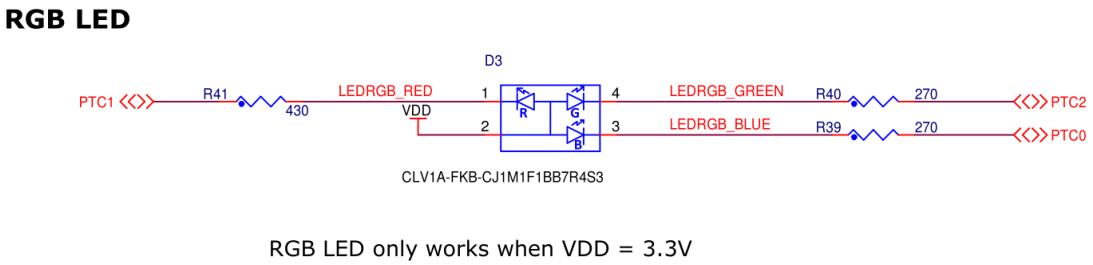

Figure 10. RGB schematic diagram

As is shown in Figure 10, the signal connections are shown in Table 6.

Table 6. RGB LED signals

RGB LED	KL82Z connection
Red Cathode	PTC0
Green Cathode	PTC2
Blue Cathode	PTC1

3.7. Flexio/Camera header

FRDM KL82Z also provides the Flexio/Camera header, which is shown in Figure 11.

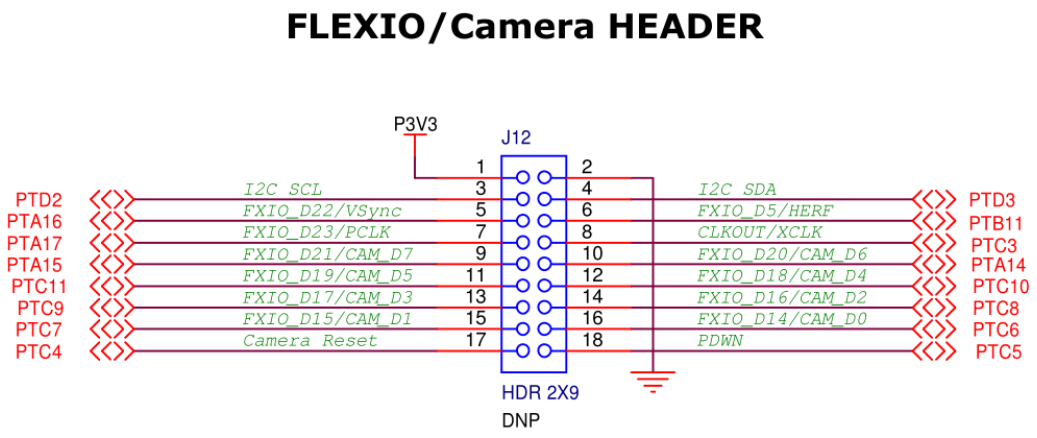

Figure 11. FlexIO/Camera header

3.8. Analog reference voltage

The on-board Reference Voltage High (VREFH) and Reference Voltage Low (VREFL) pins are used to set high and low voltage references for the analog modules. By default, VREFH is attached to P3V3_KL82Z (3.3V Supply). VREFL is connected to GND.

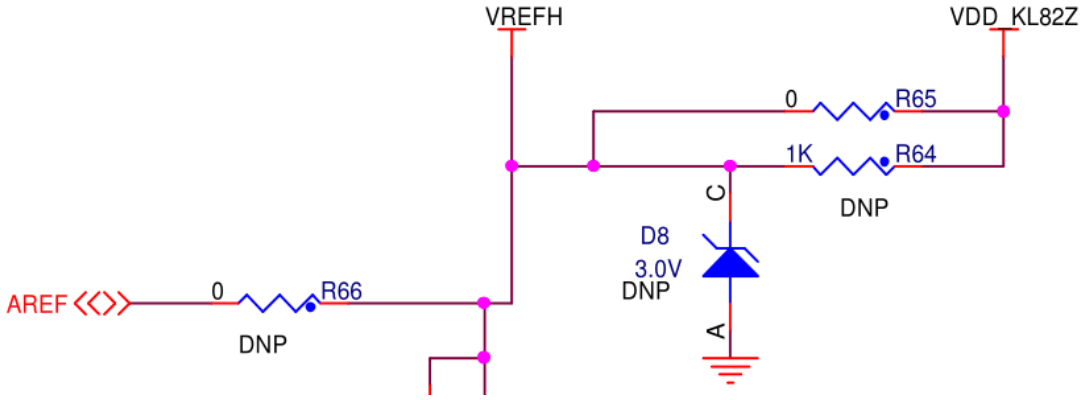

Figure 12. VREFH circuit schematic

If desired, VREFH can use a VDDA independent reference by adding R64 and a Zener diode (D8). R65 (0 Ω resistor) must be removed when implementing this option.

3.9. Input/output headers

The MKL82 MCU is packaged in an 80-pin LQFP. Some pins are used by on-board circuitry, but many are directly connected to one of the four I/O headers (J1, J2, J3 and J4) as shown in Table 7.

Table 7. GPIO Pins description

J1 Pin	Description	J1 Pin	Description
1	PTA14	2	PTB16 (Arduino_D0_UART0_RX)
3	PTA15	4	PTB17 (Arduino_D1_UART0_TX)
5	PTA16	6	PTD7 (Arduino_D2)
7	PTA17	8	PTC1 (Arduino_D3)
9	PTC8	10	PTC12 (Arduino_D4)
11	PTA1	12	PTC2 (Arduino_D5)
13	PTA2	14	PTC3 (Arduino_D6)
15	PTB11	16	PTC9 (Arduino_D7)
J2 Pin	**Description**	**J2 Pin**	**Description**
1	PTB4 (EMVSIM1_IO)	2	PTD4 (Arduino_D8)
3	PTB5 (EMVSIM1_CLK)	4	PTD5 (Arduino_D9)
5	PTB6 (EMVSIM1_VCCEN)	6	PTC4 (Arduino_D10_SPI0_PCS1)
7	PTB7 (EMVSIM1_PD)	8	PTC6 (Arduino_D11_SPI0_SOUT)
9	PTB8 (EMVSIM1_RST)	10	PTC7 (Arduino_D12_SPI0_IN)
11	NC	12	PTC5 (Arduino_D13_SPI0_SCK)
13	NC	14	GND
15	PTE7	16	AREF
17	PTE8	18	PTC11 (Arduino_D14_I2C_SDA)
19	PTE11	20	PTC10 (Arduino_D15_I2C_SCL)
J3 Pin	**Description**	**J3 Pin**	**Description**
1	ADC0_DP1	2	NC
3	ADC0_DM1	4	P3V3
5	VREF_OUT	6	RESET_B
7	RTC_WAKEUP_B	8	P3V3
9	VBAT	10	P5V_USB
11	NC	12	GND
13	NC	14	GND
15	NC	16	P5-9V_VIN
J4 Pin	**Description**	**J4 Pin**	**Description**
1	NC	2	DAC0_OUT (ADC0_SE23)
3	NC	4	PTD1 (ADC0_SE5)
5	NC	6	PTC0 (ADC0_SE4)
7	NC	8	PTD6 (ADC0_SE7)
9	NC	10	PTC1 (ADC0_SE9)
11	DAC0_OUT	12	PTB0 (ADC0_SE8)

4. Jumper table

There are several jumpers provided for isolation, configuration, and feature selection. See Table 8 for details (ON means Jumper fitted, OFF means Jumper not fitted, and the default state is labeled by yellow).

Table 8. Jumper description

Jumper	Option	Setting	Description
J6	SWD Clock OpenSDA Connection	ON	Connect SWD_CLK from the OPENSDA circuit to KL82 MCU to allow debugging using OPENSDA.
		OFF	Disconnect SWD_CLK from the OPENSDA circuit to KL82 MCU to allow J-Link or U-Link debugging.
J7	SWD DIO OpenSDA Connection	ON	Connect SWD_DIO from the OPENSDA circuit to KL82 MCU to allow debugging using OPENSDA.
		OFF	Disconnect SWD_DIO from the OPENSDA circuit to KL82 MCU to allow J-Link or U-Link debugging.
J8	OpenSDA Reset	ON	Connect board reset to OpenSDA (K20). There is a board trace that makes this connection even though the jumper is not populated.
		OFF	Disconnect board reset to OpenSDA(K20). By default there is a board trace connecting this signal even though the jumper is off.
J10	P3V3_SDA Connection	ON	Power to P3V3_SDA by SDA_Vout33.
		OFF	Disconnect SDA_Vout33 to P3V3_SDA. By default, there is a board trace connecting this signal even though the jumper is off.
J13	VDDIO_E Connection	ON	Power for KL82 PORT E.
		OFF	Disconnected VDDIO_E.
J14	VDD Selection	1-2	VDD selection, option VDD to 3.3 V.
		2-3	VDD selection, option VDD to 1.8 V.
J15	VDD Connection	ON	Connect VDD for KL82.
		OFF	Disconnect VDD.
J16	VBAT Connection	ON	Enable VDD power to VBAT.
		OFF	Disconnect VDD and VBAT. By default, there is a board trace connecting this signal even though the jumper is off.
J17	SWD Clock Connection	ON	Connect SWD_CLK of the SWD connector to KL82 MCU, allowing debugging using OPENSDA.
		OFF	Disconnect the SWD_CLK of SWD connector to KL82 MCU, effectively isolating the on-board MCU from the OpenSDA debugging interface.
J18	P3V3 Protection	ON	When the P3V3 power is supplied directly by the compatibility header J3, enable protection diode D7 by opening J18.
		OFF	By default, there is a trace connecting this signal even though the jumper is off.
J21	USB Host function enabled	ON	Place this jumper to enable USB host functionality.
		OFF	Disable the USB host functionality.
J23	RESET Button Connection	1-2	Reset signal is used when OpenSDA is powered.
		2-3	Reset signal direct to the MCU, to be used when OpenSDA is not powered.

5. Reference Documents

The reference documents for the FRDM-KL82Z hardware are as follows:

- *FRDM-KL82Z Quick Start Guide* (FRDMKL82ZQRGD)
- *FRDM-KL82Z User's Guide* (FRDMKL82ZUG)
- *FRDM-KL82Z Schematics PDF* (sch-28889_b)
- *OpenSDA User's Guide* (OSDAUG)
- *KL82 Sub-Family Reference Manual* (KL82P121M72SF0RM)

How to Reach Us:

Home Page:
freescale.com

Web Support:
freescale.com/support

Information in this document is provided solely to enable system and software implementers to use Freescale products. There are no express or implied copyright licenses granted hereunder to design or fabricate any integrated circuits based on the information in this document.

Freescale reserves the right to make changes without further notice to any products herein. Freescale makes no warranty, representation, or guarantee regarding the suitability of its products for any particular purpose, nor does Freescale assume any liability arising out of the application or use of any product or circuit, and specifically disclaims any and all liability, including without limitation consequential or incidental damages. “Typical” parameters that may be provided in Freescale data sheets and/or specifications can and do vary in different applications, and actual performance may vary over time. All operating parameters, including “typicals,” must be validated for each customer application by customer's technical experts. Freescale does not convey any license under its patent rights nor the rights of others. Freescale sells products pursuant to standard terms and conditions of sale, which can be found at the following address: freescale.com/SalesTermsandConditions.

Freescale, the Freescale logo, and Kinetis are trademarks of Freescale Semiconductor, Inc., Reg. U.S. Pat. & Tm. Off. All other product or service names are the property of their respective owners. ARM and Cortex are registered trademarks of ARM Limited (or its subsidiaries) in the EU and/or elsewhere. mbed is a trademark of ARM Limited (or its subsidiaries) in the EU and/or elsewhere. All rights reserved.

© 2016 Freescale Semiconductor, Inc.

Document Number: FRDMKL82ZUG
Rev. 0, 01/2016