KTFRDMHB2000ESEVMUG

FRDM-HB2000ESEVM evaluation board

Rev. 2 — 11 June 2018 User guide

1 FRDM-HB2000ESEVM

2 Important notice

NXP provides the enclosed product(s) under the following conditions: This evaluation kit is intended for use of ENGINEERING DEVELOPMENT OR EVALUATION PURPOSES ONLY. It is provided as a sample IC pre-soldered to a printed circuit board to make it easier to access inputs, outputs, and supply terminals. This evaluation board may be used with any development system or other source of I/O signals by simply connecting it to the host MCU or computer board via off-the-shelf cables. This evaluation board is not a Reference Design and is not intended to represent a final design recommendation for any particular application. Final device in an application will be heavily dependent on proper printed circuit board layout and heat sinking design as well as attention to supply filtering, transient suppression, and I/O signal quality.

The goods provided may not be complete in terms of required design, marketing, and or manufacturing related protective considerations, including product safety measures typically found in the end product incorporating the goods. Due to the open construction of the product, it is the user's responsibility to take any and all appropriate precautions with regard to electrostatic discharge. In order to minimize risks associated with the customers applications, adequate design and operating safeguards must be provided by the customer to minimize inherent or procedural hazards. For any safety concerns, contact NXP sales and technical support services.

Should this evaluation kit not meet the specifications indicated in the kit, it may be returned within 30 days from the date of delivery and will be replaced by a new kit.

NXP reserves the right to make changes without further notice to any products herein. NXP makes no warranty, representation or guarantee regarding the suitability of its products for any particular purpose, nor does NXP assume any liability arising out of the application or use of any product or circuit, and specifically disclaims any and all liability, including without limitation consequential or incidental damages. “Typical” parameters can and do vary in different applications and actual performance may vary over time. All operating parameters, including “Typical”, must be validated for each customer application by customer’s technical experts.

NXP does not convey any license under its patent rights nor the rights of others. NXP products are not designed, intended, or authorized for use as components in systems intended for surgical implant into the body, or other applications intended to support or sustain life, or for any other application in which the failure of the NXP product could create a situation where personal injury or death may occur.

Should the Buyer purchase or use NXP products for any such unintended or unauthorized application, the Buyer shall indemnify and hold NXP and its officers, employees, subsidiaries, affiliates, and distributors harmless against all claims, costs, damages, and expenses, and reasonable attorney fees arising out of, directly or indirectly, any claim of personal injury or death associated with such unintended or unauthorized use, even if such claim alleges NXP was negligent regarding the design or manufacture of the part. NXP and the NXP logo are trademarks of NXP B.V. All other product or service names are the property of their respective owners. © NXP B.V. 2018

All information provided in this document is subject to legal disclaimers.

© NXP B.V. 2018. All rights reserved.

3 Getting started

The NXP analog product development boards provide an easy-to-use platform for evaluating NXP products. These development boards support a range of analog, mixed-signal, and power solutions. These boards incorporate monolithic integrated circuits and system-in-package devices that use proven high-volume technology. NXP products offer longer battery life, a smaller form factor, reduced component counts, lower cost, and improved performance in powering state-of-the-art systems.

The tool summary page for FRDM-HB2000ESEVM is at http://www.nxp.com/FRDM-HB2000ESEVM. The overview tab on this page provides an overview of the device, a list of device features, a description of the kit contents, links to supported devices and a **Get Started** section.

The **Get Started** section provides information applicable to using the FRDM-HB2000ESEVM.

1. Go to http://www.nxp.com/FRDM-HB2000ESEVM.
2. On the **Overview** tab, locate the **Jump To** navigation feature on the left side of the window.
3. Select the **Get Started** link.
4. Review each entry in the **Get Started** section.
5. Download an entry by clicking the linked title.

After reviewing the **Overview** tab, visit the other related tabs for additional information:

- **Documentation**: Download current documentation.
- **Software & Tools**: Download current hardware and software tools.
- **Buy/Parametrics**: Purchase the product and view the product parametrics.

After downloading files, review each file, including the user guide, which includes setup instructions. If applicable, the bill of materials (BOM) and supporting schematics are also available for download in the **Get Started** section of the **Overview** tab.

3.1 Kit content/packing list

The FRDM-HB2000ESEVM content includes:

- Assembled and tested evaluation board/module in anti-static bag
- FRDM-KL25Z
- Quick start guide

All information provided in this document is subject to legal disclaimers.

© NXP B.V. 2018. All rights reserved.

3.2 Required equipment

This kit requires the following items:

- 3/16-inch blade screwdriver for connecting the cables
- DC power supply: 5.0 V to 40 V with up to 20 A current handling capability, depending on motor requirements
- USB standard A (male) to mini-B (male) cable
- Typical loads (brushed DC motor, power resistors, or inductive load with up to 5.0 A and 28 V operation)
- Function generator (optional)
- FRDM-KL25Z Freedom development platform for serial peripheral interface (SPI) communication (included in KIT)
- SPIGen software (for using FRDM-KL25Z based SPI Dongle)

3.3 System requirements

The kit requires the following to function properly with the software:

- USB-enabled computer with Windows XP or newer

4 Getting to know the hardware

4.1 Board overview

The FRDM-HB2000ESEVM evaluation kit exercises all the functions of the MC33HB2000 H-Bridge device. Lab equipment or any microcontroller unit (MCU) with general-purpose input/output (GPIOs) can control the parallel inputs to provide pulse width modulation (PWM) control to the inputs.

The board can be used with a FRDM-KL25Z board connected to a USB port of a PC. Configure, control, and monitor the status of MC33HB2000 by using the SPI communication capabilities of the board.

4.2 Board features

The FRDM-HB2000ESEVM board evaluates the NXP part MC33HB2000, including all functions. The board features the following:

- Built-in reverse battery protection
- Test points that allow signal probing
- Built-in voltage regulator to supply logic level circuitry
- Current feedback network for real-time load current monitoring by MCU analog-to-digital converter (ADC)
- LEDs to indicate the supply status and the direction of the motor
- Low equivalent series resistance (ESR) capacitor to reduce ripple in the power supply
- Transient voltage suppressor to handle system level transients

All information provided in this document is subject to legal disclaimers.

© NXP B.V. 2018. All rights reserved.

4.3 Block diagram

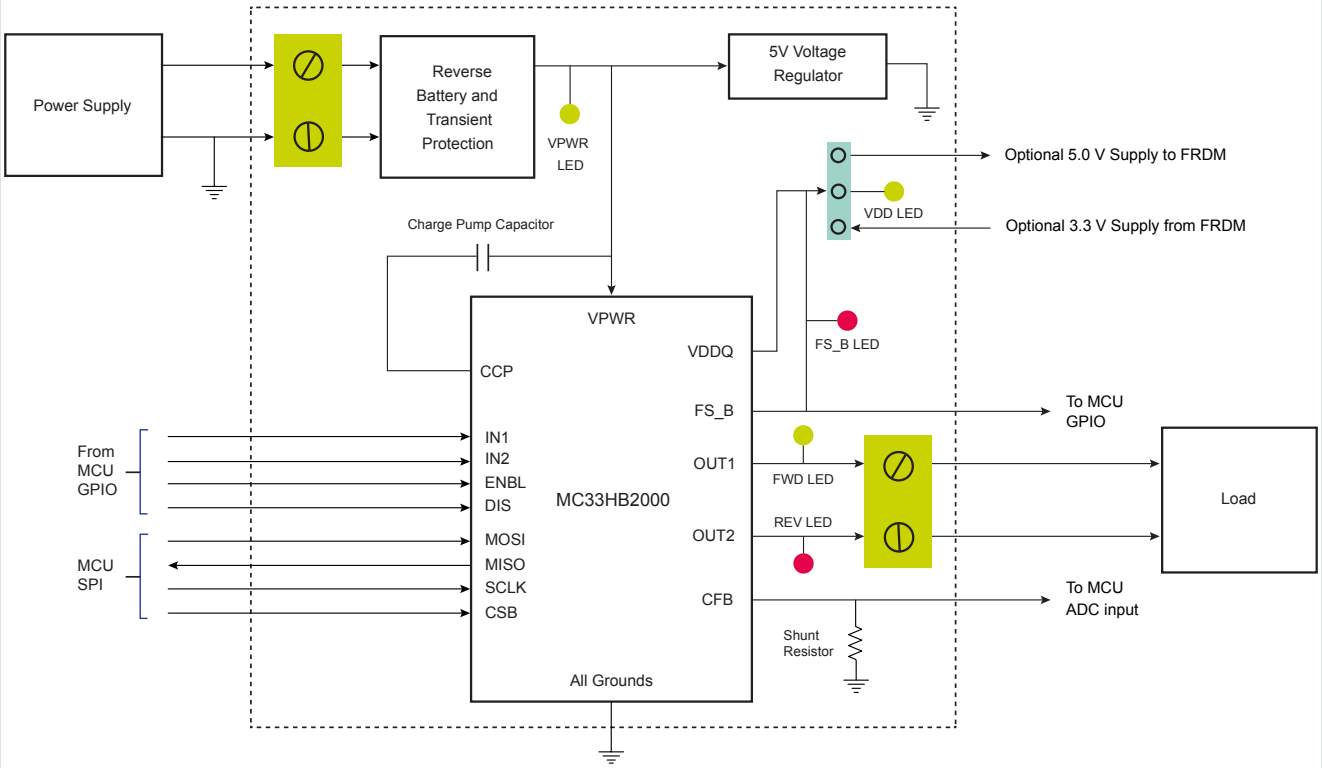

Figure 1. Block diagram

All information provided in this document is subject to legal disclaimers.

© NXP B.V. 2018. All rights reserved.

4.3.1 Device features

This evaluation board features the following NXP product:

Table 1. Device features

Device	Description	Features
MC33HB2000	The MC33HB2000 is a monolithic H-Bridge power IC, enhanced with SPI configurability, and diagnostic capabilities.	• Advanced diagnostic reporting via a serial peripheral interface (SPI): charge pump undervoltage on VPWR, short to ground and short to VPWR for each output, open load, temperature warning, and overtemperature shutdown • Thermal management: excellent thermal resistance of < 1.0 °C/W between junction and case (exposed pad) • Eight selectable slew rates via the SPI: 0.25 V/µs to more than 16 V/µs for electromagnetic interference (EMI) and thermal performance optimization • Four selectable current limits via the SPI: 5.4 A, 7.0 A, 8.8 A, 10.7 A, covering a wide range of applications • Can be operated without the SPI with a default slew rate of 2.0 V/µs and a 7.0 A current limit threshold • Highly accurate real-time current feedback through a current mirror output signal with less than 5.0 % error • Drives inductive loads in a full H-Bridge or Half-Bridge configuration • Overvoltage protection places the load in high-side recirculation (braking) mode with notification in H-Bridge mode • Wide operating range: 5.0 V to 28 V operation • Low $R_{DS(on)}$ integrated metal-oxide-semiconductor field-effect transistors (MOSFETs): Maximum of 235 mΩ (T_J = 150 °C) for each MOSFET • Internal protection for overtemperature, undervoltage, and short-circuit by signaling the error condition and disabling the outputs • I/O pins can withstand up to 36 V

4.3.2 Modes of operation

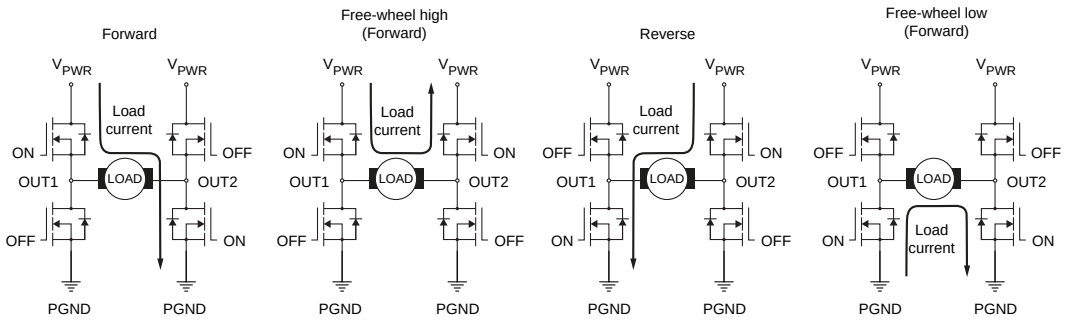

Figure 2. Modes of operation

All information provided in this document is subject to legal disclaimers.

© NXP B.V. 2018. All rights reserved.

4.3.3 Architecture

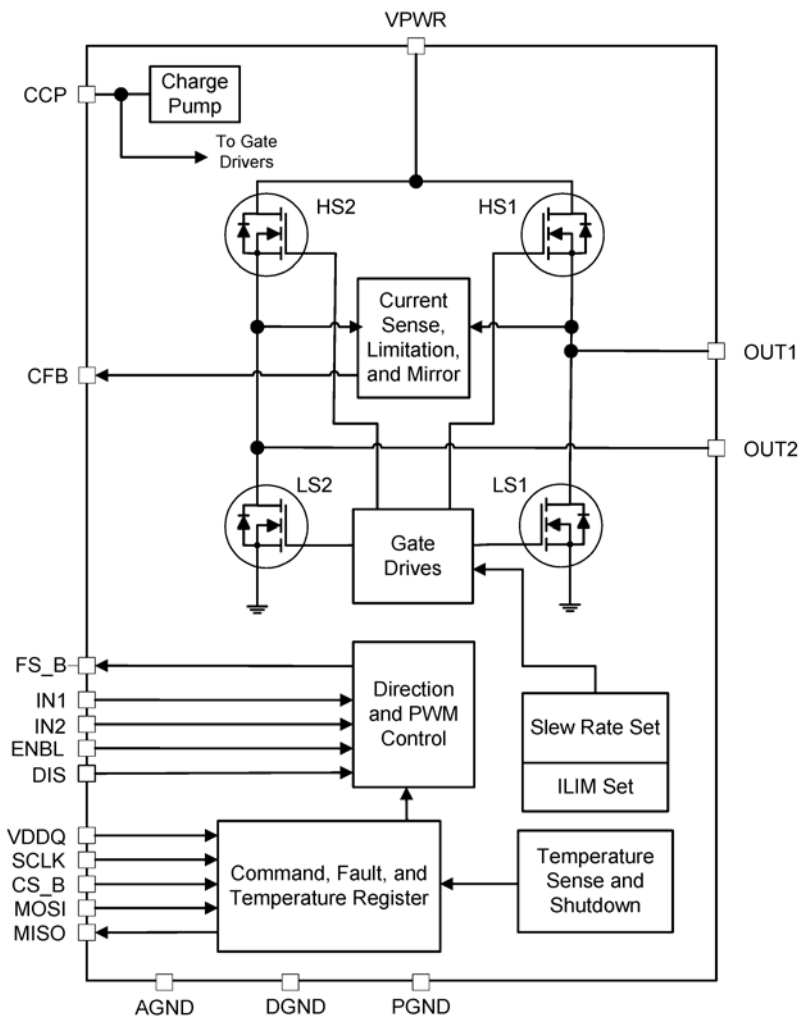

Figure 3. Architecture

All information provided in this document is subject to legal disclaimers.

© NXP B.V. 2018. All rights reserved.

4.3.4 Thermal management

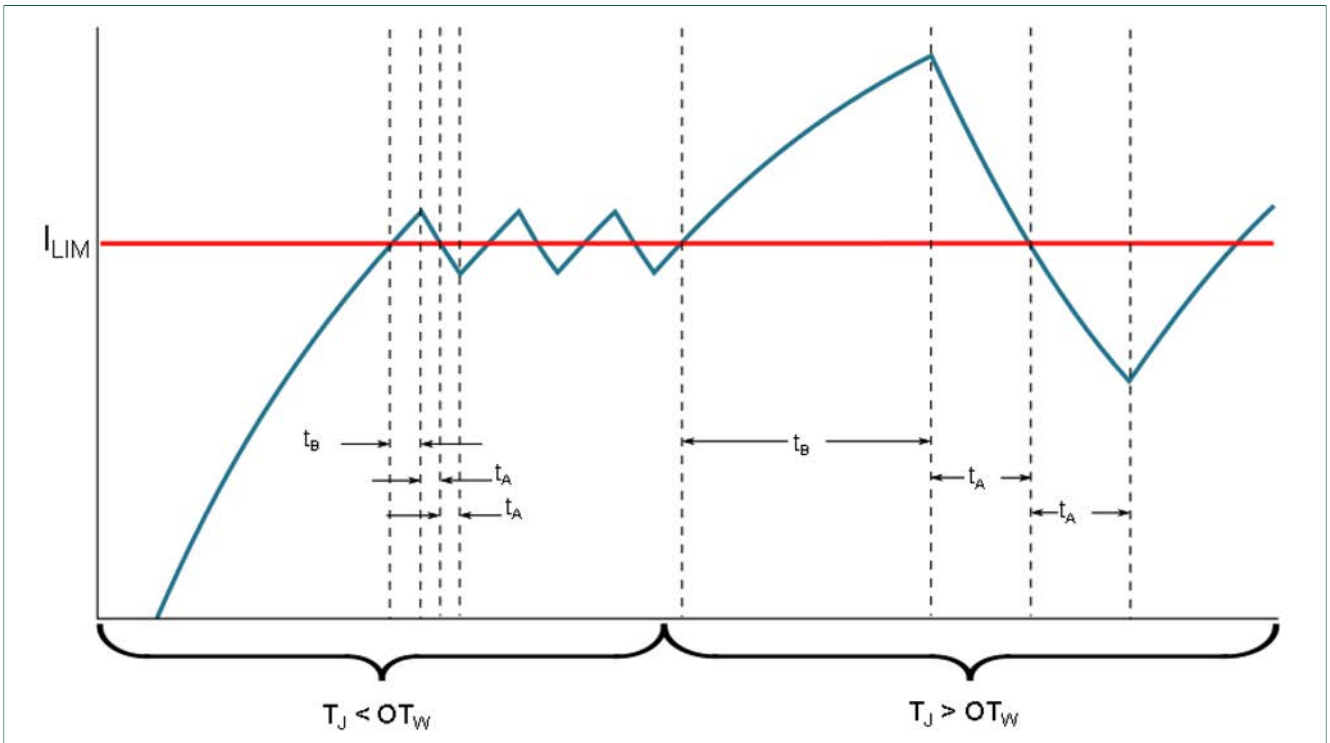

Figure 4. Thermal management

All information provided in this document is subject to legal disclaimers.

© NXP B.V. 2018. All rights reserved.

4.4 Board description

Figure 5 describes the main elements on the FRDM-HB2000ESEVM.

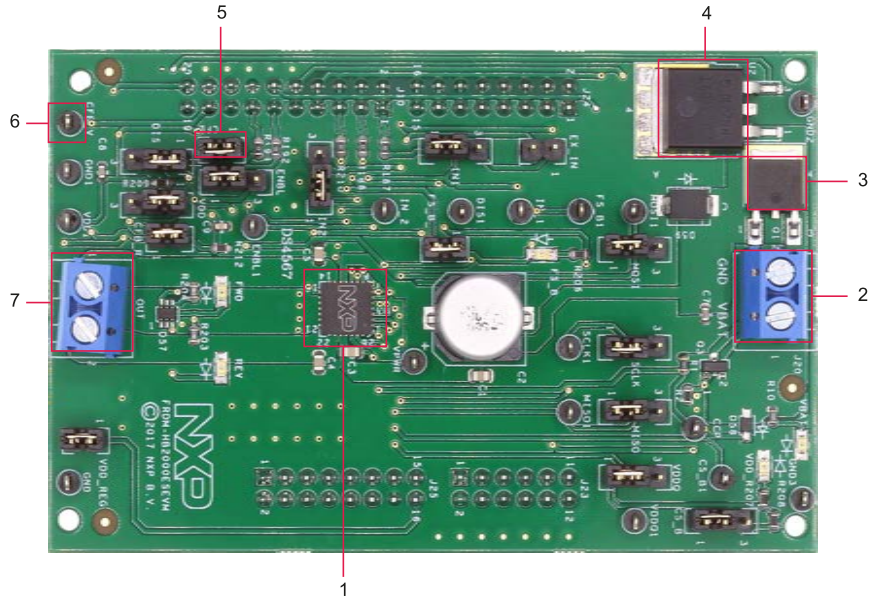

Figure 5. Board description

Table 2. Board description

Number	Name	Description
1	MC33HB2000ES	monolithic H-Bridge motor driver IC in a robust, thermally enhanced 28-pin HVQFN (6 × 6 mm) package
2	power and ground inputs	power supply terminal to connect the battery/power supply with the board
3	reverse battery protection	MOSFET for protecting MC33HB2000 in reverse battery condition
4	5.0 V regulator	5.0 V regulator for VDD and supply
5	jumpers	jumpers for configuring the board for different modes of operation
6	test points	test points to probe different signals
7	output terminal	output connector to connect a load to the MC33HB2000 output

All information provided in this document is subject to legal disclaimers.

© NXP B.V. 2018. All rights reserved.

4.5 LED description

The following LEDs are provided as visual output devices for the evaluation board:

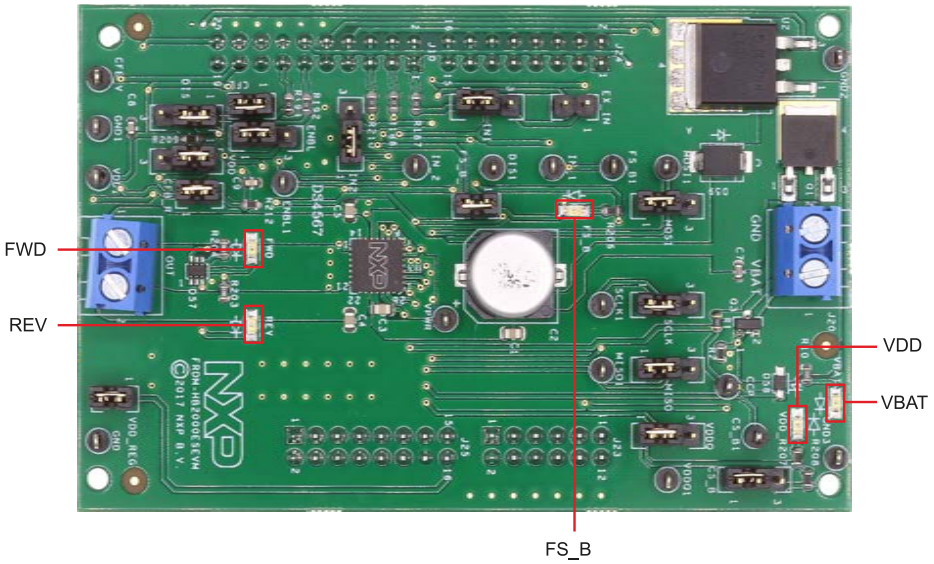

Figure 6. LED locations

Table 3. LED description

LED ID	Description
VBAT	green LED, indicates when main/battery supply is connected
VDD	green LED, indicates when +5.0 V supply is connected
FS_B	red LED, illuminates when the H-Bridge detects a fault
FWD	green LED, indicates output current in forward direction (VOUT1 > VOUT2)
REV	red LED, indicates output current in reverse direction (VOUT2 > VOUT1)

All information provided in this document is subject to legal disclaimers.

© NXP B.V. 2018. All rights reserved.

4.6 Jumper definitions

Figure 7 illustrates the evaluation board jumper locations. Table 4 explains the function of each position. Bold fonts in the jumper position column indicate the default settings for use with the FRDM-KL25Z.

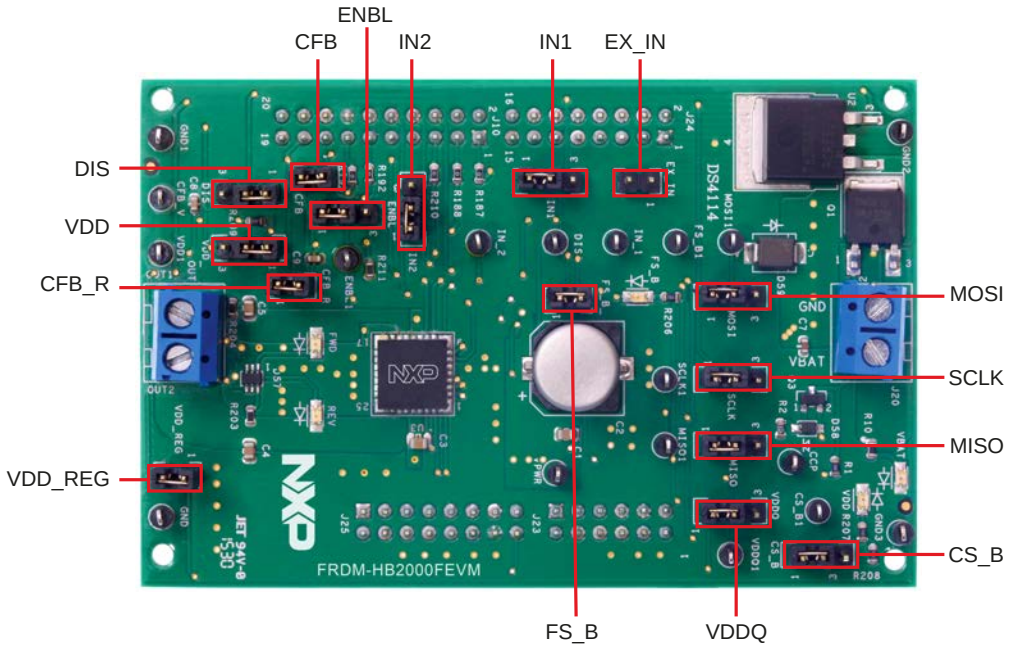

Figure 7. Jumper definitions

Table 4. Jumper locations

Name	Signal	Jumper position	Connection
J1	IN1	**1−2**	IN1 control through MCU parallel output on J10 pin 1 (DATA0)
		2−3	IN1 control through external input on J15 pin 1
J2	DIS	**1−2**	DIS control through MCU parallel output on J10 pin 13 (CTRL1)
		2−3	DIS connected to GND to keep the outputs enabled
J3	IN2	**1−2**	IN2 control through MCU parallel output on J10 pin 3 (DATA1)
		2−3	IN2 control through external input on J15 pin 2
J4	CS_B	**1−2**	CS_B control through MCU SPI output J10 pin 6 (SPI_CS_B)
		2−3	CS_B pulled up to VDD for operation without SPI
J5	ENBL	**1−2**	ENBL control through MCU parallel output J10 pin 11 (CTRL0)
		2−3	ENBL pulled up to VDD to keep the outputs enabled
J6	SCLK	**1−2**	SPI clock SCLK from MCU J10 pin 12 (SPI_SCLK)
		2−3	SCLK connected to GND for operation without SPI
J7	MOSI	**1−2**	MOSI control through MCU SPI output J10 pin 8 (SPI_MOSI)
		2−3	MOSI connected to GND for operation without SPI

All information provided in this document is subject to legal disclaimers.

© NXP B.V. 2018. All rights reserved.

Name	Signal	Jumper position	Connection
J8	MISO	**1−2**	MISO control through MCU SPI output J10 pin 10 (SPI_MISO)
		2−3	MISO not connected for operation without SPI
J11	CFB	**1−2**	CFB connected to 200 Ω resistor
J14	VDDQ	**1−2**	VDD connected to VDDQ
		2−3	VDDQ not connected
J17	VDD	**1−2**	V_{DD} supply from regulator U2
		2−3	V_{DD} supply from FRDM board
J18	CFB_R	**1−2**	CFB connected to MCU ADC input J10 pin 17 (CFB_READ)
J19	FS_B	**1−2**	FS_B connected to the pull-up resistor
J26	VDD_REG	**1−2**	V_{DD} to FRDM board
J15	EX_IN	**open**	IN1 and IN2 external inputs

The FRDM-HB2000ESEVM, with a FRDM-KL25Z board (shipped with the kit), can evaluate the design with a GUI, any MCU with GPIO or with simple lab equipment. A FRDM-KL25Z compatible GUI and MCU program are available online at the following link: http://www.nxp.com/FRDM-HB2000ESEVM.

The FRDM-HB2000ESEVM is compatible with any Arduino platform board. However, if a board other than the FRDM-KL25Z is used, MCU code must be written to work with the board.

4.7 Input signal definitions

The following input signals control the outputs or functions inside the circuit.

Table 5. Input signal definitions

Input name	Description
DIS	disable signal to 3-state the outputs
ENBL	disable signal to 3-state the output and put the part in Sleep mode
IN1	logic input to control OUT1
IN2	logic input to control OUT2
MOSI	master output slave input for the SPI
CS_B	chip select bar input for the SPI
SCLK	clock for the SPI

4.8 Output signal definitions

The FRDM-HB2000ESEVM uses the following output signals to drive a load such as a brushed DC motor. The board provides an analog output for real-time load current monitoring. This signal allows closed-loop control of the load.

All information provided in this document is subject to legal disclaimers.

© NXP B.V. 2018. All rights reserved.

Table 6. Output signal definitions

Output name	Description
OUT1	output 1 of H-Bridge
OUT2	output 2 of H-Bridge
FS_B	open-drain active LOW status flag output to indicate fault
CFB	current mirror output for real-time load current monitoring
MISO	master input slave output for SPI

4.9 Test point definitions

The following test points provide access to various signals to and from the board.

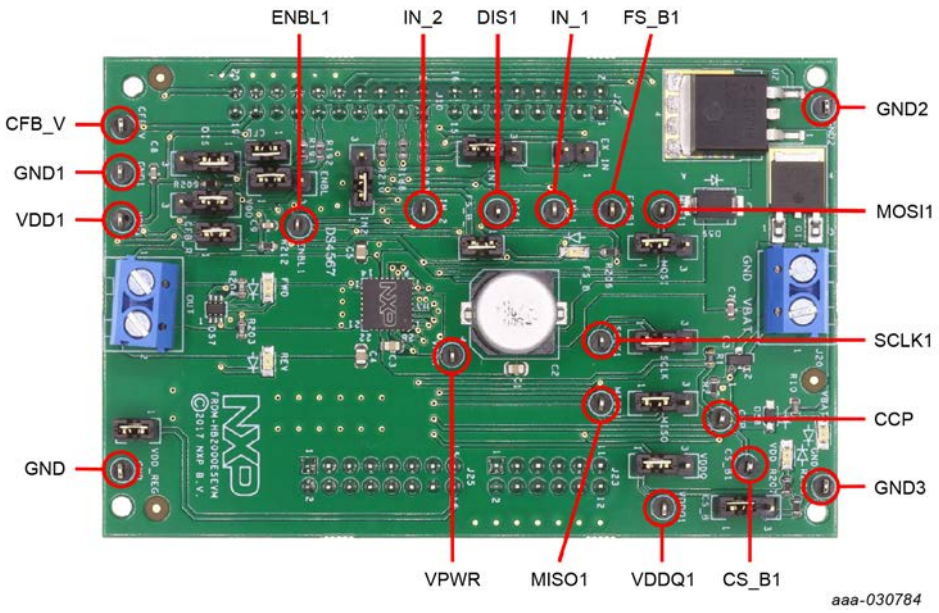

Figure 8. Test point locations

Table 7. Test point definitions

Test point name	Signal name	Description
CFB_V	CFB_READ	CFB pin voltage going to ADC
CCP	CCP	charge pump voltage
ENBL1	ENBL	enable/disable signal to activate/3-state the outputs and put the device to Sleep mode
DIS1	DIS	enable/disable signal to activate/3-state the outputs
IN_1	IN1	direction control in H-Bridge mode and OUT1 control in Half-Bridge mode
IN_2	IN2	PWM control in H-Bridge mode and OUT2 control in Half-Bridge mode
VPWR	VPWR	system voltage
VDDQ1	VDDQ	VDDQ digital output supply voltage
FS_B1	FSB	fault status monitoring pin
VDD1	VDD	V_{DD} supply for the part

All information provided in this document is subject to legal disclaimers.

© NXP B.V. 2018. All rights reserved.

Test point name	Signal name	Description
CS_B1	CS_B	chip select bar
SCLK1	SCLK	clock for SPI
MOSI1	MOSI	master output slave input signal
MISO1	MISO	master input slave output signal
GND	GND	ground signal
GND1	GND	ground signal
GND2	GND	ground signal
GND3	GND	ground signal

4.10 Screw terminal connections

The board has the following screw terminal connections to connect the power supply and the load.

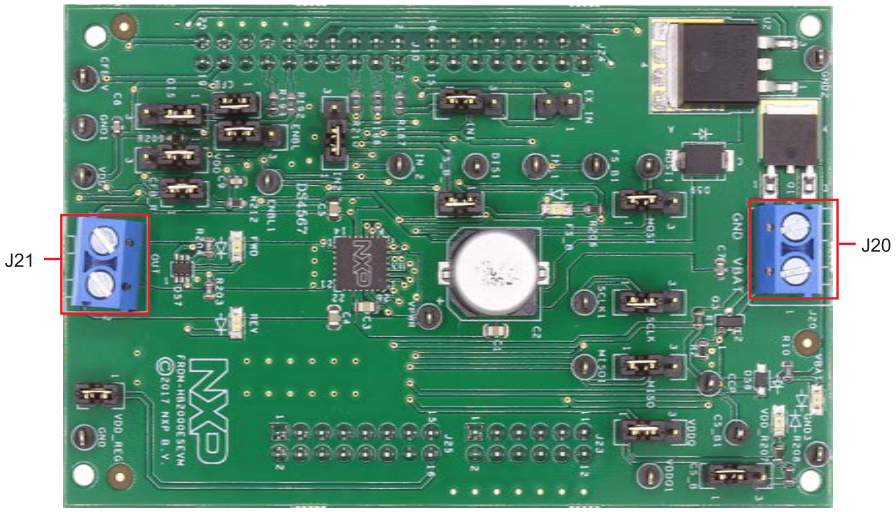

Figure 9. Screw terminal locations

Table 8. Screw terminal connections

Screw terminal name	Description
J20	power supply connector for the MC33HB2000
J21	output connector to connect load

All information provided in this document is subject to legal disclaimers.

© NXP B.V. 2018. All rights reserved.

5 FRDM-KL25Z Freedom SPI dongle

The NXP Freedom development platform is a set of software and hardware tools supporting evaluation and development. It is ideal for rapid prototyping of microcontroller-based applications. The NXP Freedom KL25Z hardware, FRDM-KL25Z, is a simple, yet sophisticated design featuring a Kinetis L series microcontroller, the first microcontroller of the industry built on the arm Cortex-M0+ core.

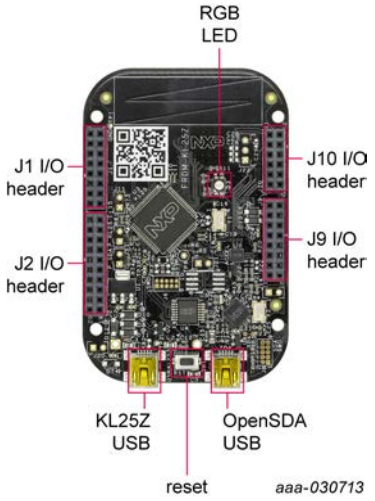

Figure 10. FRDM-KL25Z

All information provided in this document is subject to legal disclaimers.

© NXP B.V. 2018. All rights reserved.

5.1 Connecting the FRDM-KL25Z to the board

The FRDM-KL25Z evaluation board was chosen specifically to work with the FRDM-HB2000ESEVM kit because of its low cost and features. The FRDM-KL25Z board uses the USB, built-in LEDs, and I/O ports available with NXPs Kinetis KL2x family of microcontrollers.

The FRDM-KL25Z connects to a PC through a USB port, which permits the user to interact with the motor driver per the evaluation board inputs. The FRDM-KL25Z also monitors the SPI registers, by that facilitating the use of safety and advanced diagnostic functions.

The FRDM-HB2000ESEVM connects to the FRDM-KL25Z using the four dual row Arduino R3 connectors on the bottom of the board (see Table 9, Figure 11, and Figure 12). The board contains GPIO and SPI pin inputs to control and operate a brushed DC motor.

Figure 11. Connecting the FRDM-HB2000ESEVM to the FRDM-KL25Z

All information provided in this document is subject to legal disclaimers.

© NXP B.V. 2018. All rights reserved.

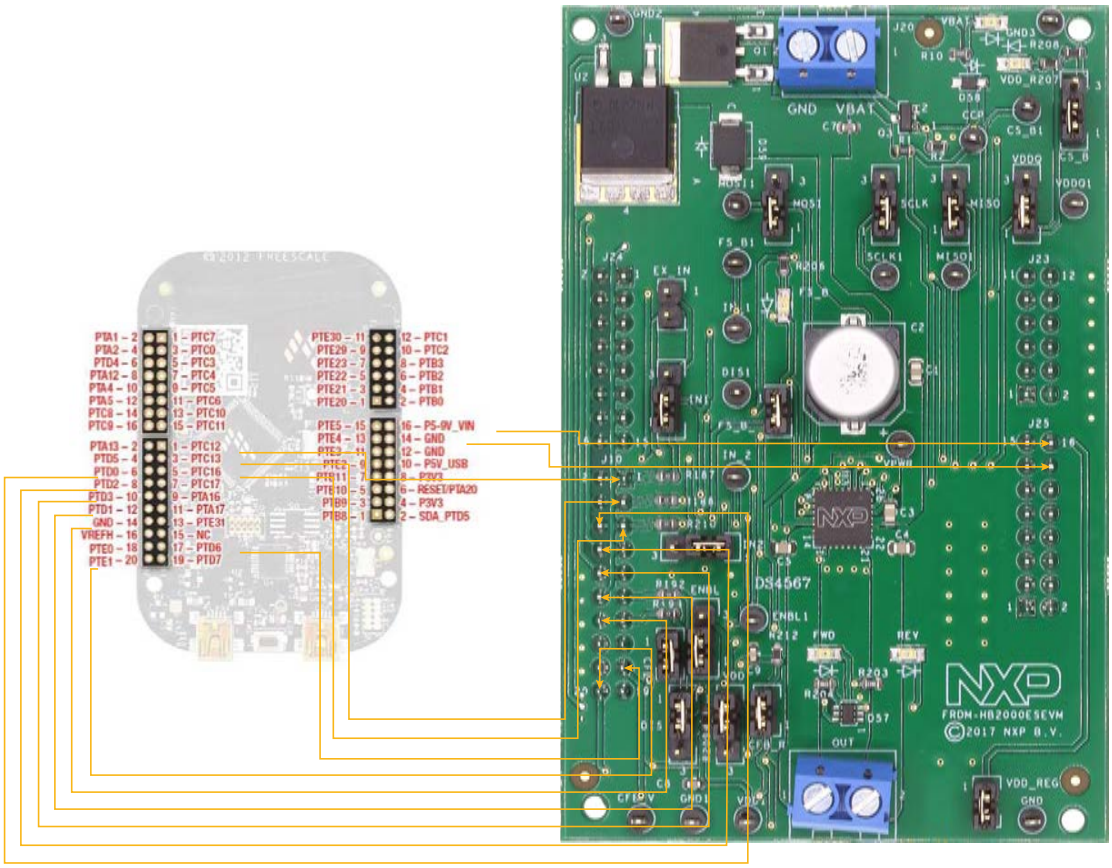

Figure 12. FRDM-KL25Z to FRDM-HB2000ESEVM connections

Table 9. FRDM-HB2000ESEVM to FRDM-KL25Z connections

FRDM-HB2000ESEVM		FRDM-KL25Z		Pin hardware name		Description
Header	Pin	Header	Pin	FRDM-HB2000ESEVM	FRDM-KL25Z	
J24	1	J1	1	n.c.	PTC7	not connected
J24	2	J1	2	n.c.	PTA1	not connected
J24	3	J1	3	n.c.	PTC0	not connected
J24	4	J1	4	n.c.	PTA2	not connected
J24	5	J1	5	n.c.	PTC3	not connected
J24	6	J1	6	n.c.	PTD4	not connected
J24	7	J1	7	n.c.	PTC4	not connected
J24	8	J1	8	n.c.	PTA12	not connected
J24	9	J1	9	n.c.	PTC5	not connected
J24	10	J1	10	n.c.	PTA4	not connected
J24	11	J1	11	n.c.	PTC6	not connected
J24	12	J1	12	n.c.	PTA5	not connected
J24	13	J1	13	n.c.	PTC10	not connected
J24	14	J1	14	n.c.	PTC8	not connected

All information provided in this document is subject to legal disclaimers.

© NXP B.V. 2018. All rights reserved.

FRDM-HB2000ESEVM		FRDM-KL25Z		Pin hardware name		Description
Header	Pin	Header	Pin	FRDM-HB2000ESEVM	FRDM-KL25Z	
J24	15	J1	15	n.c.	PTC11	not connected
J24	16	J1	16	n.c.	PTC9	not connected
J10	1	J2	1	DATA0/IN1	PTC12	IN1 signal for the H-Bridge
J10	2	J2	2	n.c.	PTA13	not connected
J10	3	J2	3	DATA1/IN2	PTC13	IN2 signal for the H-Bridge
J10	4	J2	4	n.c.	PTD5	not connected
J10	5	J2	5	FS_B	PTC16	fault status pin to report fault
J10	6	J2	6	CS_B	PTD0	chip select bar pin
J10	7	J2	7	n.c.	PTC17	not connected
J10	8	J2	8	MOSI	PTD2	master output serial input
J10	9	J2	9	n.c.	PTA16	not connected
J10	10	J2	10	MISO	PTD3	master input serial output
J10	11	J2	11	n.c.	PTA17	not connected
J10	12	J2	12	SCLK	PTD1	clock for SPI
J10	13	J2	13	n.c.	PTE31	not connected
J10	14	J2	14	GND	GND	not connected
J10	15	J2	15	n.c.	n.c.	not connected
J10	16	J2	16	n.c.	VREFH	not connected
J10	17	J2	17	CFB_READ	PTD6	ADC input for monitoring the CFB pin
J10	18	J2	18	n.c.	PTE0	disable signal to 3-state the output and put the part in Sleep mode (active LOW)
J10	19	J2	19	n.c.	PTD7	not connected
J10	20	J2	20	FRDM_VDD	PTE1	not connected
J23	1	J10	1	n.c.	PTE20	not connected
J23	2	J10	2	n.c.	PTB0	not connected
J23	3	J10	3	n.c.	PTE21	not connected
J23	4	J10	4	n.c.	PTB1	not connected
J23	5	J10	5	n.c.	PTE22	not connected
J23	6	J10	6	n.c.	PTB2	not connected
J23	7	J10	7	n.c.	PTE23	not connected
J23	8	J10	8	n.c.	PTB3	not connected
J23	9	J10	9	n.c.	PTE29	not connected
J23	10	J10	10	n.c.	PTC2	not connected
J23	11	J10	11	n.c.	PTE30	not connected
J23	12	J10	12	n.c.	PTC1	not connected

All information provided in this document is subject to legal disclaimers.

© NXP B.V. 2018. All rights reserved.

FRDM-HB2000ESEVM		FRDM-KL25Z		Pin hardware name		Description
Header	Pin	Header	Pin	FRDM-HB2000ESEVM	FRDM-KL25Z	
J25	1	J9	1	n.c.	PTB8	not connected
J25	2	J9	2	n.c.	SDA_PTD5	not connected
J25	3	J9	3	n.c.	PTB9	not connected
J25	4	J9	4	n.c.	P3V3	not connected
J25	5	J9	5	n.c.	PTB10	not connected
J25	6	J9	6	n.c.	RESET/PTA20	not connected
J25	7	J9	7	n.c.	PTB11	not connected
J25	8	J9	8	n.c.	P3V3	not connected
J25	9	J9	9	n.c.	PTE2	not connected
J25	10	J9	10	n.c.	P5V_USB	not connected
J25	11	J9	11	n.c.	PTE3	not connected
J25	12	J9	12	GND	GND	ground
J25	13	J9	13	n.c.	PTE4	not connected
J25	14	J9	14	GND	GND	not connected
J25	15	J9	15	n.c.	PTE5	not connected
J25	16	J9	16	VDD_REG	P5-9V_VIN	5.0 V logic input to FRDM-KL25Z board from FRDM-HB2000ESEVM

All information provided in this document is subject to legal disclaimers.

© NXP B.V. 2018. All rights reserved.

6 Installing the software and setting up the hardware

6.1 Configuring the hardware

The FRDM-HB2000ESEVM consists of an H-Bridge, a parallel and SPI interface, power conditioning circuitry and a FRDM-KL25Z board. The board can be configured for use with a FRDM-KL25Z board or a function generator.

	Caution
⚠	When using the FRDM-HB2000ESEVM, make sure that the maximum motor supply voltage (VPWR) stays within the 5.0 V to 40 V range. Operating outside this range may cause damage to the board.

6.1.1 Step-by-step instructions for setting up the hardware for use with a FRDM-KL25Z

To configure the FRDM-HB2000ESEVM for use with the FRDM-KL25Z do the following:

1. Connect the FRDM-HB2000ESEVM to the FRDM-KL25Z using the Arduino connectors on each board.
2. Connect the USB cable (not supplied with the kit) between the PC and the KL25Z USB port on the FRDM-KL25Z board.
3. With the power switched off, attach the DC power supply to the VBAT and GND screw connector terminal (J20) on the evaluation board.
4. Connect the load to the screw terminal (J21).

Figure 13 illustrates the hardware configuration using a FRDM-KL25Z.

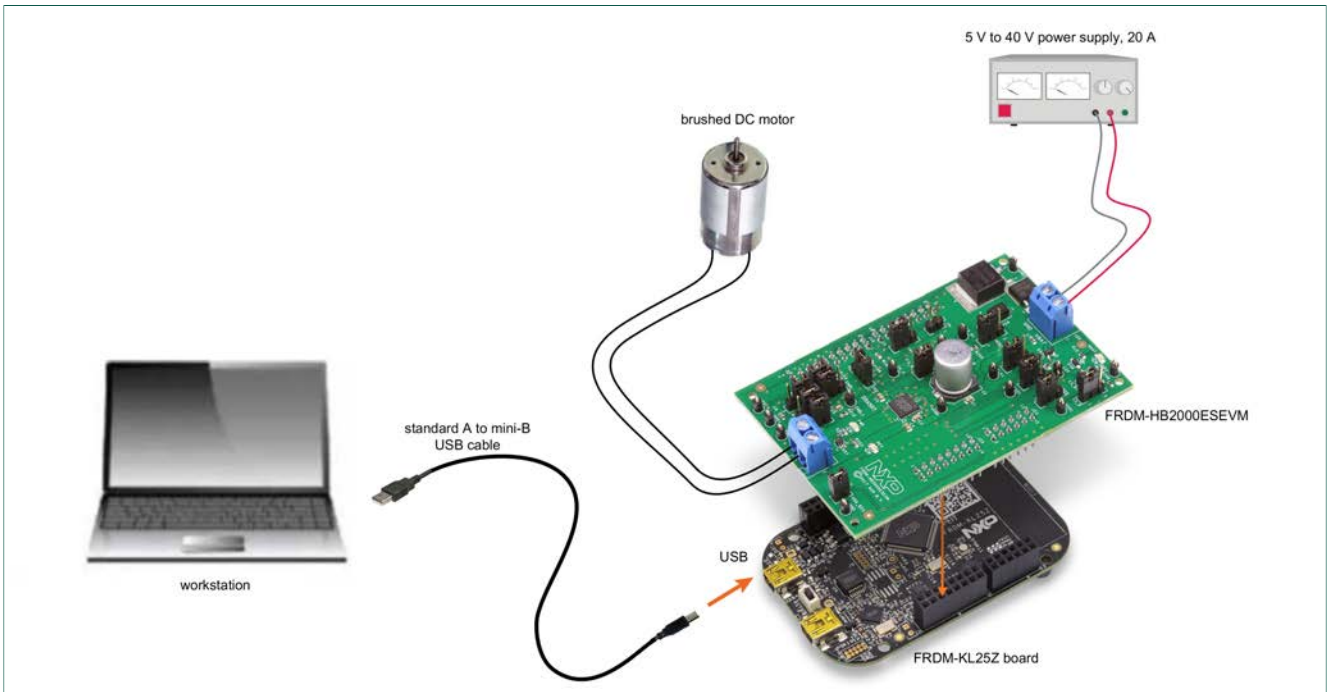

Figure 13. FRDM-HB2000ESEVM configured for use with a FRDM-KL25Z board

All information provided in this document is subject to legal disclaimers.

© NXP B.V. 2018. All rights reserved.

6.1.2 Step-by-step instructions for setting up the hardware for use with a function generator

This section describes how to configure the FRDM-HB2000ESEVM for use with a function generator. The same connections apply if the board is connected to a microcontroller instead of a function generator. To configure the board for use in a specific environment, see Section 4.4, Section 7, and the MC33HB2000 data sheet.

1. Connect the function generator to the EX_IN jumper, with one channel attached to each pin.
2. Change the board jumper connections, as shown in Figure 14.
3. With the power switched off, attach the DC power supply to the VBAT and GND screw connector terminal (J20) on the evaluation board.
4. Connect the load to the screw terminal (J21).

Figure 14 illustrates the hardware configuration.

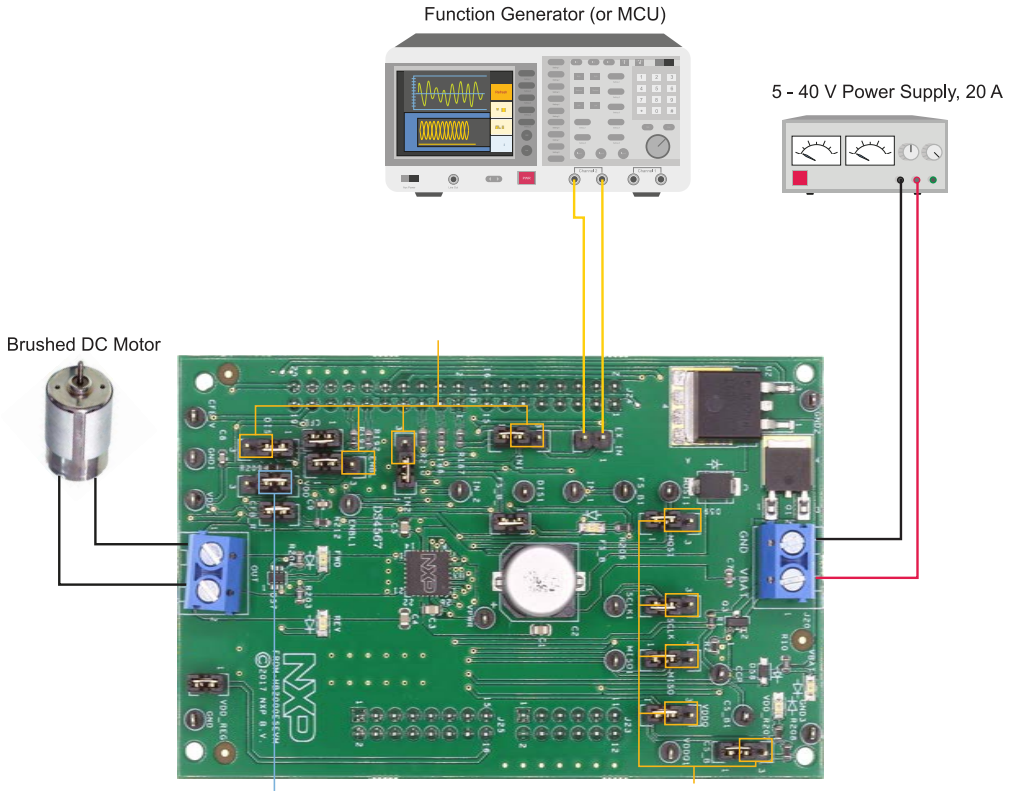

Figure 14. FRDM-HB2000ESEVM configured for use with a function generator

All information provided in this document is subject to legal disclaimers.

© NXP B.V. 2018. All rights reserved.

6.2 Installing and using SPIGen

The latest version of SPIGen supports the MC33HB2000 and is designed to run on any Windows 10, Windows 8, Windows 7, Vista, or XP-based operating system. To install the software, do the following:

1. Go to www.nxp.com/SPIGen and click **Download**.
2. When the SPIGEN: SPI Generator (SPIGen) Software page appears, go to the **Lab and Test Software** section and click **Download** associated with the description of the selected environment. A wizard guides the user through the process.
3. If instructed for the SPIGen wizard to create a shortcut, a SPIGen icon appears on the desktop. By default, the SPIGen executable file is installed at **C:Program Files\SPIGen**.
   Installing the device drivers overwrites any previous SPIGen installation and replaces it with a current version containing the MC33HB2000 drivers. However, configuration files (.spi) from the previous version remain intact.
4. Launch SPIGen. The HB2000/HB2001 device appears in the **Device View** panel.

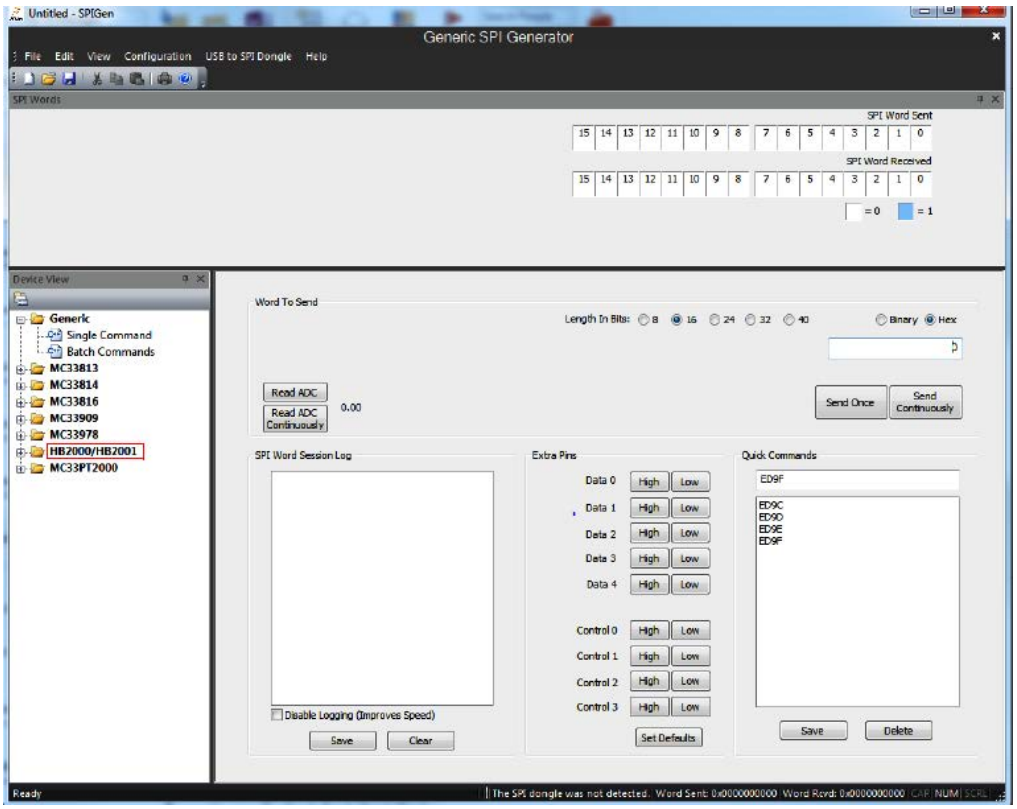

5. To access the HB2000/HB2001 tab in the SPIGen window, expand the HB2000/HB2001 folder in the Device View. Then click **Registers** icon.

All information provided in this document is subject to legal disclaimers.

© NXP B.V. 2018. All rights reserved.

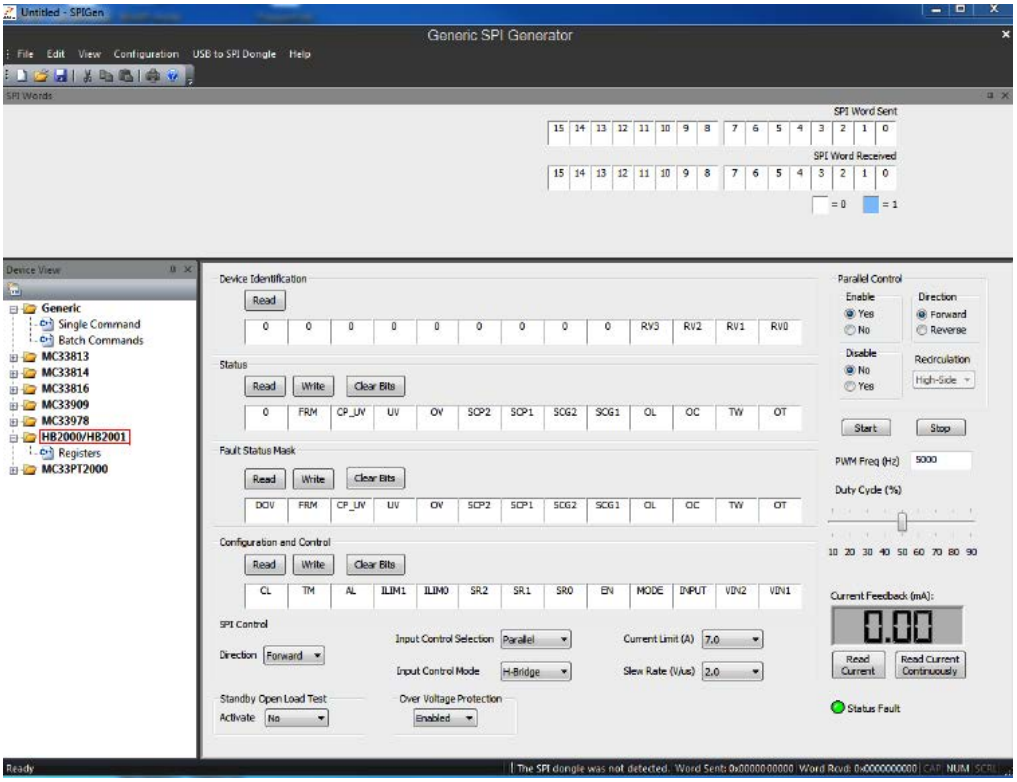

If the pre-programmed code on FRDM-KL25Z is accidentally erased, download "UsbSpiDongleKL25Z_HB2000_HB2001_v512.srec" from the following link: www.nxp.com/Usb-Spi-Dongle-firmware-KL25Z-HB2000-1. The .srec file is a configuration file for the FRDM-KL25Z MCU kit (to be uploaded via the OpenSDA port), containing the KL25Z pin definitions, SPI/PWM generation code, and mapping to interface with the HB2000ESEVB.

6. Reading all the SPI Registers displays the following default status.

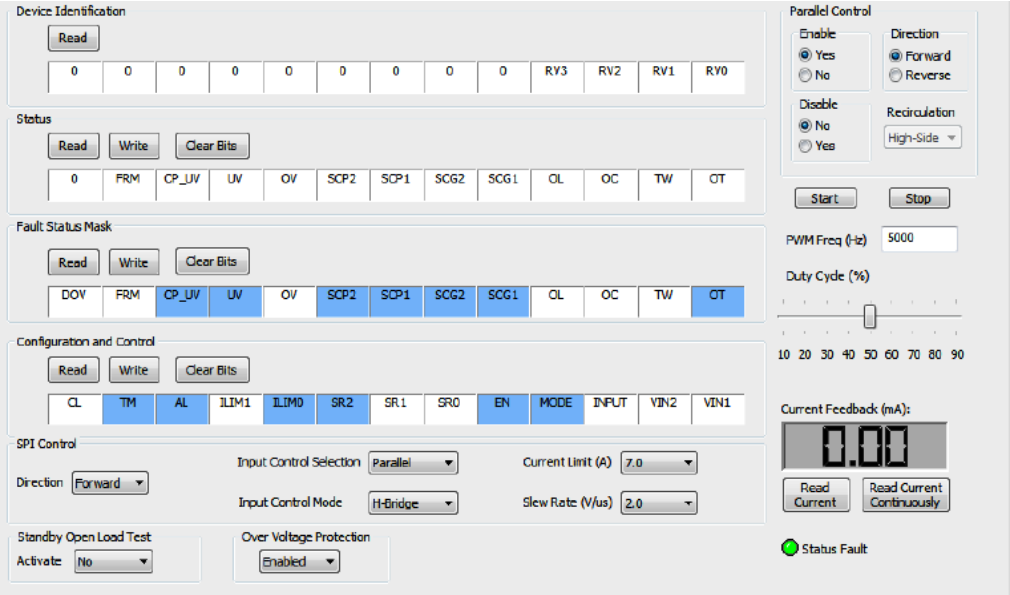

All information provided in this document is subject to legal disclaimers.

© NXP B.V. 2018. All rights reserved.

6.2.1 SPI control

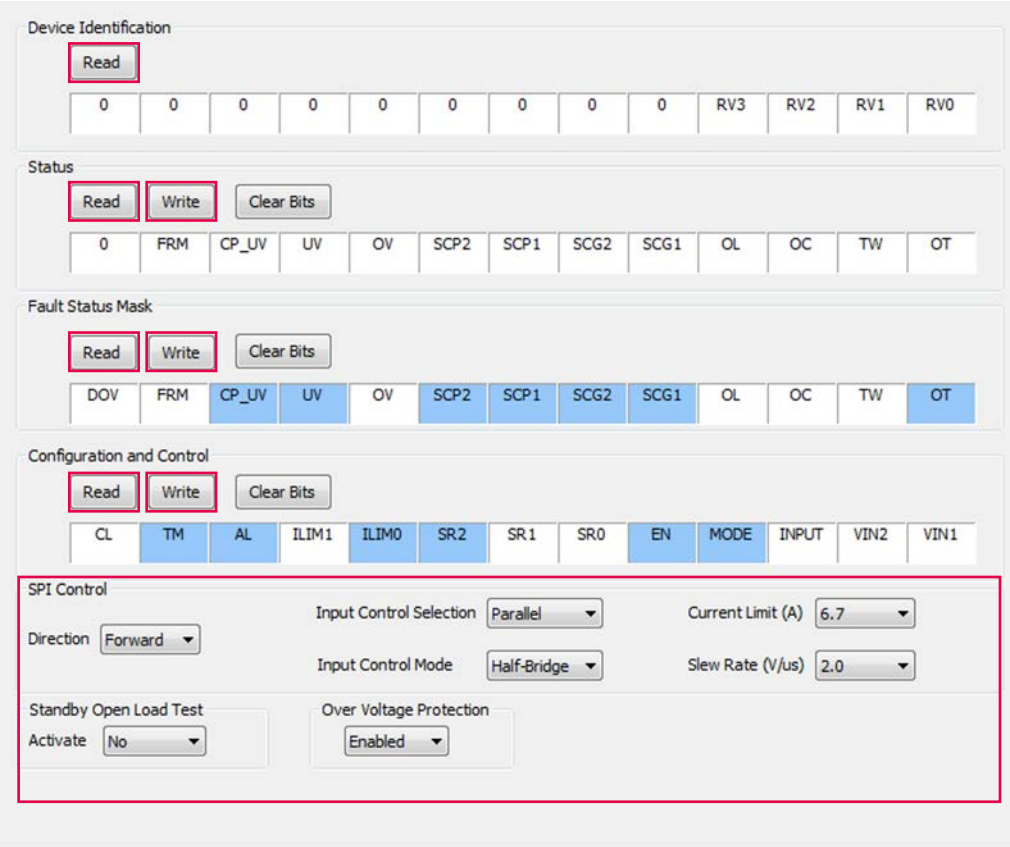

Figure 15. SPI control description

Table 10. SPI control description

Name	Description
Read	To read the content of each register, click the read button on top of each register.
Write	Click individual bits of any register and then press the corresponding write button to write into the register.
SPI control	This section is designed for ease of use. Each dropdown menu sets or resets appropriate bits in the registers for a selected configuration. However, after configuration selection, press the write button of the corresponding register to be able to configure the part.

All information provided in this document is subject to legal disclaimers.

© NXP B.V. 2018. All rights reserved.

6.2.2 Parallel control

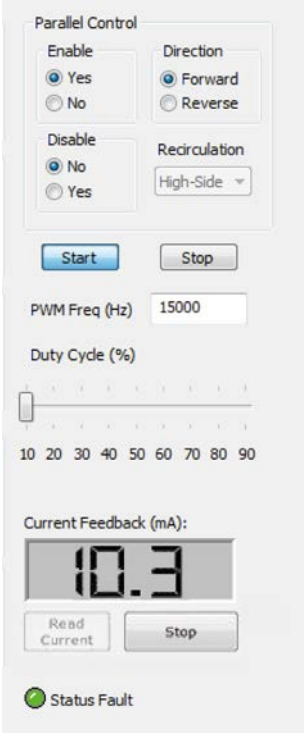

Figure 16. Parallel control description

Direction:

- **Forward**: Current flowing through OUT1 to OUT2
- **Reverse**: Current flowing through OUT2 to OUT1

Recirculation:

- **High-side**: Freewheel-High (both high-side FETs turned on) during PWMing
- **Low-side**: Freewheel-Low (both low-side FETs turned on) during PWMing (only valid for Half-Bridge mode)

ENBL:

- **Yes**: ENBL is logic HIGH, the H-Bridge is operational
- **No**: ENBL is logic LOW, the H-Bridge outputs are 3-stated and placed in Sleep mode

DIS:

- **Yes**: DIS is logic HIGH, both OUT1 and OUT2 are 3-stated
- **No**: DIS is logic LOW, both OUT1 and OUT2 are enabled

PWM Freq:

- Enter PWM frequency up to 20000 Hz

Duty Cycle:

- Select PWM duty cycle from 10 % to 90 %

Start:

- After selection of parallel control configuration, press **Start** to activate the outputs

All information provided in this document is subject to legal disclaimers.

© NXP B.V. 2018. All rights reserved.

Stop:

- Press **Stop** to deactivate the outputs

Current Feedback:

- Shows current through the high-side FET using the current recopy feature as interpreted by the KL25Z microcontrollers ADC

Status Fault:

- Shows any fault condition in Sleep mode

Table 11. Logic behind direction control with high-side versus low-side recirculation

Direction	Recirculation	Input signal (INx) generated
Half-Bridge mode (MODE = 0)		
Forward	high-side recirculation	IN1 = 1
		IN2 = PWM signal with selected duty cycle and frequency
Reverse	high-side recirculation	IN1 = PWM signal with selected duty cycle and frequency
		IN2 = 1
Forward	low-side recirculation	IN1 = PWM signal with selected duty cycle and frequency
		IN2 = 0
Reverse	low-side recirculation	IN1 = 0
		IN2 = PWM signal with selected duty cycle and frequency
Full H-Bridge mode (MODE = 1)		
Forward	high-side recirculation	IN1 = 1
		IN2 = PWM signal with selected duty cycle and frequency
Reverse	high-side recirculation	IN1 = 0
		IN2 = PWM signal with selected duty cycle and frequency

All information provided in this document is subject to legal disclaimers.

© NXP B.V. 2018. All rights reserved.

7 Schematic

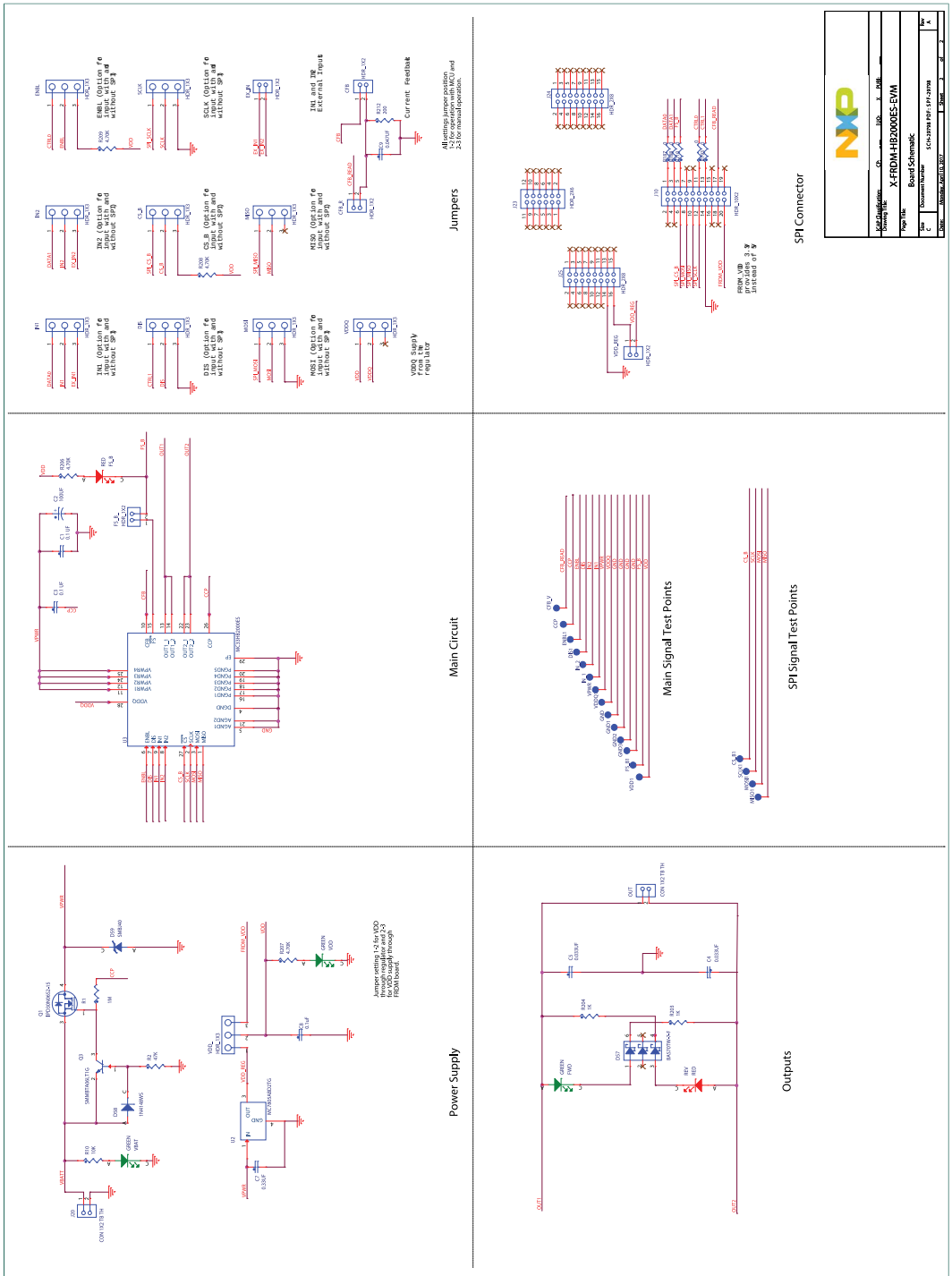

Figure 17. FRDM-HB2000ESEVM schematic

All information provided in this document is subject to legal disclaimers.

© NXP B.V. 2018. All rights reserved.

8 Board layout

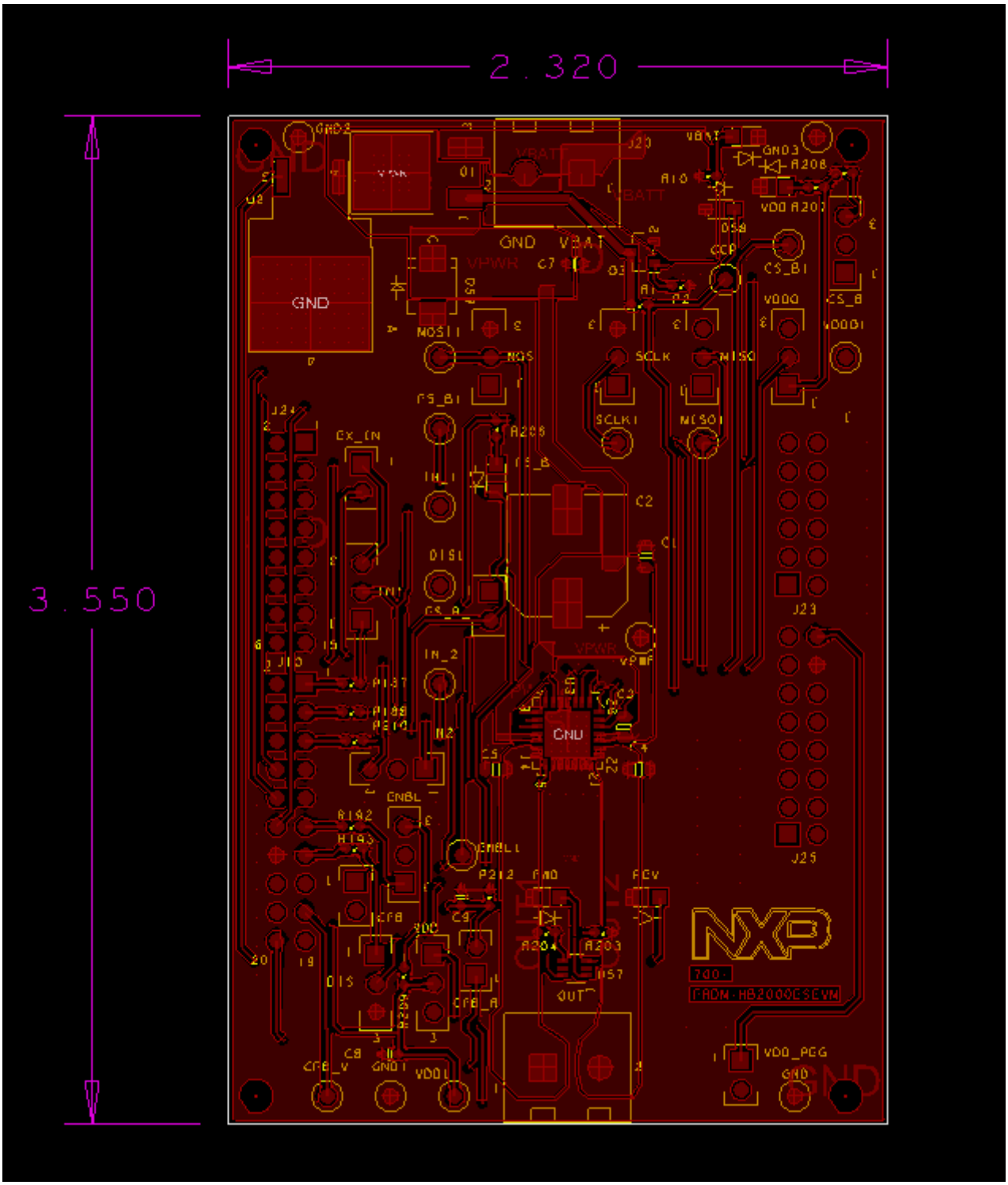

Figure 18. Silkscreen

All information provided in this document is subject to legal disclaimers.

© NXP B.V. 2018. All rights reserved.

9 Bill of materials

Table 12. Bill of materials

Item	Qty	Schematic label	Value	Description	Part number	Assy opt
Active components[1]						
1	1	U1		IC DRV H-BRIDGE MOTOR 3.0 A 5.0 V to 28 V HVQFN28 – NXP	HB2000ES	[2]
2	1	U2		IC VREG 5.0 V 1.0 A 5.0 V to 18 V D2PAK – ON Semiconductor	MC7805ABD2TG	[2]
Diodes[1]						
3	1	D2	24 V	DIODE TVS UNIDIR 600 W 24 V AEC-Q101 SMB	SMBJ24AHE3/52	
4	1	D57	70 V	DIODE SCH TRIPLE 70 mA 70 V 200 mW SOT363	BAS70TW-7-F	
5	1	D58	75 V	DIODE SW 150 mA 75 V SOD323	1N4148WS-7-F	
6	2	D59, D64	25 mA	LED RED SGL 25 mA 0805	598-8110-107F	
7	3	D60, D61, D63	25 mA	LED GRN SGL 25 mA 0805	598-8170-107F	
Capacitors[1]						
8	2	C1, C13	0.1 µF	CAP CER 0.1 µF 50 V 10 % X7R 0805	C0805C104K5RAC	
9	1	C2	100 µF	CAP ALEL 100 µF 50 V 20 % AEC-Q200 RADIAL SMT	MAL214699104E3	
10	2	C4, C5	0.033 µF	CAP CER 0.033 µF 50 V 10 % X7R 0805	08055C333KAT2A	
11	1	C7	0.33 µF	CAP CER 0.33 µF 50 V 10 % X7R 0603	C1608X7R1H334K080AC	
12	1	C8	0.1 µF	CAP CER 0.1 µF 16 V 10 % X7R AEC-Q200 0603	GCM188R71C104KA37D	
13	1	C9	0.047 µF	CAP CER 0.047 µF 25 V 10 % X7R 0603	C0603X7R250-473KNE	
Resistors[1]						
14	1	R1	1.0 MΩ	RES 1 MΩ 1/4 W 1 % AEC-Q200 0603	CRCW06031M00FKEAHP	
15	1	R2	47 kΩ	RES MF 47 kΩ 1/10 W 1.0 % AEC-Q200 0603	CRCW060347K0FKEA	
16	1	R10	10 kΩ	RES MF 10 kΩ 1/10 W 5 % AEC-Q200 0603	ERJ-3GEYJ103V	
17	5	R187, R188, R192, R193, R210	0 Ω	RES MF 0 Ω 1/10 W 0603	CRCW06030000Z0EA	
18	1	R212	200 Ω	RES MF 200 Ω 1/10 W 1 % 0603	RK73H1JTTD2000F	
19	2	R203, R204	1.0 kΩ	RES MF 1.0 kΩ 1/10 W 1 % 0603	AR03FTNX1001	
20	4	R206, R207, R208, R209	4.70 kΩ	RES MF 4.70 kΩ 1/10 W 1 % 0603	RK73H1JTTD4701F	

All information provided in this document is subject to legal disclaimers.

© NXP B.V. 2018. All rights reserved.

Item	Qty	Schematic label	Value	Description	Part number	Assy opt
Switches, connectors, jumpers, and test points[1]						
21	18	IN1, GND1, IN2, GND2, GND3, VPWR, VDDQ, VDD, SCLK, MOSI, MISO, GND, FS_B, ENBL, DIS, CS_B, CFB_V, CCP		TEST POINT BLACK 40 MIL DRILL 180 MIL TH 109L	5001	
22	10	J1, J2, J3, J4, J5, J6, J7, J8, J14, J17		HDR 1X3 TH 100 MIL SP 374H AU	826629-3	
23	1	J10		HDR 2X10 TH 100 MIL CTR 330H AU 100L	TSW-110-07-S-D	
24	5	J11, J15, J18, J19, J26		HDR 1X2 TH 100 MIL SP 378H AU 130L	826629-2	
25	2	J20, J21		CON 1X2 TB TH 5.08 MM 543H SN 138L	20020316-H021B01LF	
26	1	J23		HDR 2X6 TH 100 MIL CTR 330H AU	TSW-106-07-S-D	
27	2	J24, J25		HDR 2X8 TH 100 MIL CTR 330H AU	TSW-108-07-G-D	
28	1	Q1		TRAN NMOS PWR 30 A 55 V AEC-Q101 TO252	IPD30N06S2-15	
29	1	Q3		TRAN NPN DRIVER 500 mA 80 V AEC-Q101 SOT23	SMMBTA06LT1G	

[1] NXP does not assume liability, endorse, or warrant components from external manufacturers are referenced in circuit drawings or tables. While NXP offers component recommendations in this configuration, it is the responsibility of the customer to validate their application.

[2] Critical components. For critical components, it is vital to use the manufacturer listed.

10 Accessory item bill of materials

Table 13. Accessory item bill of materials

Item	Qty	Part Number	Description
1	1	FRDM-KL25Z[1]	NXP Freedom development platform for Kinetis KL14, KL15, KL24, KL25 MCUs

[1] NXP does not assume liability, endorse, or warrant components from external manufacturers are referenced in circuit drawings or tables. While NXP offers component recommendations in this configuration, it is the responsibility of the customer to validate their application.

All information provided in this document is subject to legal disclaimers.

© NXP B.V. 2018. All rights reserved.

11 References

Following are URLs where you can obtain information on related NXP products and application solutions:

Support page	Description	URL
FRDM-HB2000ESEVM	tool summary page	http://www.nxp.com/FRDM-HB2000ESEVM
MC33HB2000	product summary page	http://www.nxp.com/HB2000
FRDM-KL25Z	tool summary page	http://www.nxp.com/FRDM-KL25Z
SPIGen	SPI generator software	http://www.nxp.com/SPIGEN

12 Revision history

Rev	Date	Description
2	20180611	• Table 2: updated MC33HB2000ES part number and package description • Table 3: updated naming and reflect current direction • Table 7: correct test point name • Table 9: updated, reflect EVB name • Figure 13: updated, reflect EVB name • Table 11: changed layout for readability • Table 12: updated, reflect board layout and part numbers
1.0	9/2017	initial release

All information provided in this document is subject to legal disclaimers.

© NXP B.V. 2018. All rights reserved.

13 Legal information

13.1 Definitions

Draft — The document is a draft version only. The content is still under internal review and subject to formal approval, which may result in modifications or additions. NXP Semiconductors does not give any representations or warranties as to the accuracy or completeness of information included herein and shall have no liability for the consequences of use of such information.

13.2 Disclaimers

Limited warranty and liability — Information in this document is believed to be accurate and reliable. However, NXP Semiconductors does not give any representations or warranties, expressed or implied, as to the accuracy or completeness of such information and shall have no liability for the consequences of use of such information. NXP Semiconductors takes no responsibility for the content in this document if provided by an information source outside of NXP Semiconductors. In no event shall NXP Semiconductors be liable for any indirect, incidental, punitive, special or consequential damages (including - without limitation - lost profits, lost savings, business interruption, costs related to the removal or replacement of any products or rework charges) whether or not such damages are based on tort (including negligence), warranty, breach of contract or any other legal theory. Notwithstanding any damages that customer might incur for any reason whatsoever, NXP Semiconductors' aggregate and cumulative liability towards customer for the products described herein shall be limited in accordance with the Terms and conditions of commercial sale of NXP Semiconductors.

Right to make changes — NXP Semiconductors reserves the right to make changes to information published in this document, including without limitation specifications and product descriptions, at any time and without notice. This document supersedes and replaces all information supplied prior to the publication hereof.

Applications — Applications that are described herein for any of these products are for illustrative purposes only. NXP Semiconductors makes no representation or warranty that such applications will be suitable for the specified use without further testing or modification. Customers are responsible for the design and operation of their applications and products using NXP Semiconductors products, and NXP Semiconductors accepts no liability for any assistance with applications or customer product design. It is customer's sole responsibility to determine whether the NXP Semiconductors product is suitable and fit for the customer's applications and products planned, as well as for the planned application and use of customer's third party customer(s). Customers should provide appropriate design and operating safeguards to minimize the risks associated with their applications and products. NXP Semiconductors does not accept any liability related to any default, damage, costs or problem which is based on any weakness or default in the customer's applications or products, or the application or use by customer's third party customer(s). Customer is responsible for doing all necessary testing for the customer's applications and products using NXP Semiconductors products in order to avoid a default of the applications and the products or of the application or use by customer's third party customer(s). NXP does not accept any liability in this respect.

Suitability for use in automotive applications — This NXP Semiconductors product has been qualified for use in automotive applications. Unless otherwise agreed in writing, the product is not designed, authorized or warranted to be suitable for use in life support, life-critical or safety-critical systems or equipment, nor in applications where failure or malfunction of an NXP Semiconductors product can reasonably be expected to result in personal injury, death or severe property or environmental damage. NXP Semiconductors and its suppliers accept no liability for inclusion and/or use of NXP Semiconductors products in such equipment or applications and therefore such inclusion and/or use is at the customer's own risk.

Export control — This document as well as the item(s) described herein may be subject to export control regulations. Export might require a prior authorization from competent authorities.

Evaluation products — This product is provided on an "as is" and "with all faults" basis for evaluation purposes only. NXP Semiconductors, its affiliates and their suppliers expressly disclaim all warranties, whether express, implied or statutory, including but not limited to the implied warranties of non-infringement, merchantability and fitness for a particular purpose. The entire risk as to the quality, or arising out of the use or performance, of this product remains with customer. In no event shall NXP Semiconductors, its affiliates or their suppliers be liable to customer for any special, indirect, consequential, punitive or incidental damages (including without limitation damages for loss of business, business interruption, loss of use, loss of data or information, and the like) arising out the use of or inability to use the product, whether or not based on tort (including negligence), strict liability, breach of contract, breach of warranty or any other theory, even if advised of the possibility of such damages. Notwithstanding any damages that customer might incur for any reason whatsoever (including without limitation, all damages referenced above and all direct or general damages), the entire liability of NXP Semiconductors, its affiliates and their suppliers and customer's exclusive remedy for all of the foregoing shall be limited to actual damages incurred by customer based on reasonable reliance up to the greater of the amount actually paid by customer for the product or five dollars (US$5.00). The foregoing limitations, exclusions and disclaimers shall apply to the maximum extent permitted by applicable law, even if any remedy fails of its essential purpose.

Translations — A non-English (translated) version of a document is for reference only. The English version shall prevail in case of any discrepancy between the translated and English versions.

13.3 Trademarks

Notice: All referenced brands, product names, service names and trademarks are the property of their respective owners.

Kinetis — is a trademark of NXP B.V.

SafeAssure — is a trademark of NXP B.V.

SMARTMOS — is a trademark of NXP B.V.

All information provided in this document is subject to legal disclaimers.

© NXP B.V. 2018. All rights reserved.

Tables

Tab. 1. Device features 6
Tab. 2. Board description 9
Tab. 3. LED description 10
Tab. 4. Jumper locations 11
Tab. 5. Input signal definitions 12
Tab. 6. Output signal definitions 13
Tab. 7. Test point definitions 13
Tab. 8. Screw terminal connections 14
Tab. 9. FRDM-HB2000ESEVM to FRDM-KL25Z connections 17
Tab. 10. SPI control description 24
Tab. 11. Logic behind direction control with high-side versus low-side recirculation 26
Tab. 12. Bill of materials 29
Tab. 13. Accessory item bill of materials 30

Figures

Fig. 1. Block diagram 5
Fig. 2. Modes of operation 6
Fig. 3. Architecture 7
Fig. 4. Thermal management 8
Fig. 5. Board description 9
Fig. 6. LED locations 10
Fig. 7. Jumper definitions 11
Fig. 8. Test point locations 13
Fig. 9. Screw terminal locations 14
Fig. 10. FRDM-KL25Z 15
Fig. 11. Connecting the FRDM-HB2000ESEVM to the FRDM-KL25Z 16
Fig. 12. FRDM-KL25Z to FRDM-HB2000ESEVM connections 17
Fig. 13. FRDM-HB2000ESEVM configured for use with a FRDM-KL25Z board 20
Fig. 14. FRDM-HB2000ESEVM configured for use with a function generator 21
Fig. 15. SPI control description 24
Fig. 16. Parallel control description 25
Fig. 17. FRDM-HB2000ESEVM schematic 27
Fig. 18. Silkscreen 28

All information provided in this document is subject to legal disclaimers.

© NXP B.V. 2018. All rights reserved.

Contents

1 FRDM-HB2000ESEVM 1
2 Important notice 2
3 Getting started 3
3.1 Kit content/packing list 3
3.2 Required equipment 4
3.3 System requirements 4
4 Getting to know the hardware 4
4.1 Board overview 4
4.2 Board features 4
4.3 Block diagram 5
4.3.1 Device features 6
4.3.2 Modes of operation 6
4.3.3 Architecture 7
4.3.4 Thermal management 8
4.4 Board description 9
4.5 LED description 10
4.6 Jumper definitions 11
4.7 Input signal definitions 12
4.8 Output signal definitions 12
4.9 Test point definitions 13
4.10 Screw terminal connections 14
5 FRDM-KL25Z Freedom SPI dongle 15
5.1 Connecting the FRDM-KL25Z to the board 16
6 Installing the software and setting up the hardware 20
6.1 Configuring the hardware 20
6.1.1 Step-by-step instructions for setting up the hardware for use with a FRDM-KL25Z 20
6.1.2 Step-by-step instructions for setting up the hardware for use with a function generator 21
6.2 Installing and using SPIGen 22
6.2.1 SPI control 24
6.2.2 Parallel control 25
7 Schematic 27
8 Board layout 28
9 Bill of materials 29
10 Accessory item bill of materials 30
11 References 31
12 Revision history 31
13 Legal information 32

Please be aware that important notices concerning this document and the product(s) described herein, have been included in section 'Legal information'.

© NXP B.V. 2018. All rights reserved.

For more information, please visit: http://www.nxp.com
For sales office addresses, please send an email to: salesaddresses@nxp.com

Date of release: 11 June 2018
Document identifier: KTFRDMHB2000ESEVMUG