UM11108

FRDM-GD3100EVM half-bridge evaluation board

Rev. 5 — 10 February 2020 User manual

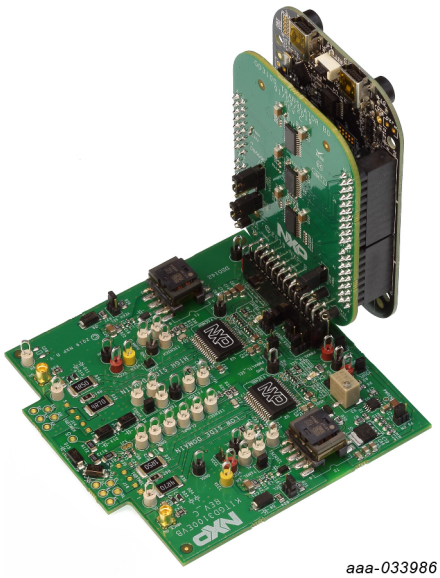

aaa-033986

Important Notice

NXP provides the enclosed product(s) under the following conditions:

This evaluation kit is intended for use of ENGINEERING DEVELOPMENT OR EVALUATION PURPOSES ONLY. It is provided as a sample IC pre-soldered to a printed circuit board to make it easier to access inputs, outputs, and supply terminals. This evaluation board may be used with any development system or other source of I/O signals by simply connecting it to the host MCU or computer board via off-the-shelf cables. This evaluation board is not a Reference Design and is not intended to represent a final design recommendation for any particular application. Final device in an application will be heavily dependent on proper printed circuit board layout and heat sinking design as well as attention to supply filtering, transient suppression, and I/O signal quality.

The goods provided may not be complete in terms of required design, marketing, and or manufacturing related protective considerations, including product safety measures typically found in the end product incorporating the goods. Due to the open construction of the product, it is the user's responsibility to take any and all appropriate precautions with regard to electrostatic discharge. In order to minimize risks associated with the customers applications, adequate design and operating safeguards must be provided by the customer to minimize inherent or procedural hazards. For any safety concerns, contact NXP sales and technical support services.

Should this evaluation kit not meet the specifications indicated in the kit, it may be returned within 30 days from the date of delivery and will be replaced by a new kit.

NXP reserves the right to make changes without further notice to any products herein. NXP makes no warranty, representation or guarantee regarding the suitability of its products for any particular purpose, nor does NXP assume any liability arising out of the application or use of any product or circuit, and specifically disclaims any and all liability, including without limitation consequential or incidental damages. “Typical” parameters can and do vary in different applications and actual performance may vary over time. All operating parameters, including “Typical”, must be validated for each customer application by customer’s technical experts.

NXP does not convey any license under its patent rights nor the rights of others. NXP products are not designed, intended, or authorized for use as components in systems intended for surgical implant into the body, or other applications intended to support or sustain life, or for any other application in which the failure of the NXP product could create a situation where personal injury or death may occur.

Should the Buyer purchase or use NXP products for any such unintended or unauthorized application, the Buyer shall indemnify and hold NXP and its officers, employees, subsidiaries, affiliates, and distributors harmless against all claims, costs, damages, and expenses, and reasonable attorney fees arising out of, directly or indirectly, any claim of personal injury or death associated with such unintended or unauthorized use, even if such claim alleges NXP was negligent regarding the design or manufacture of the part.

1 Finding kit resources and information on the NXP web site

NXP Semiconductors provides online resources for this evaluation board and its supported device(s) on http:/www.nxp.com.

The information page for FRDM-GD3100EVM Rev C half-bridge evaluation board is at http://www.nxp.com/FRDM-GD3100EVM. The information page provides overview information, documentation, software and tools, parametrics, ordering information and a **Getting Started** tab. The **Getting Started** tab provides quick-reference information applicable to using the FRDM-GD3100EVM Rev C half-bridge evaluation board, including the downloadable assets referenced in this document.

1.1 Collaborate in the NXP Community

The NXP Community is for sharing ideas and tips, ask and answer technical questions, and receive input on just about any embedded design topic.

The NXP Community is at http://community.nxp.com.

2 Getting started

The NXP analog product development boards provide an easy-to-use platform for evaluating NXP products. These development boards support a range of analog, mixed-signal, and power solutions. These boards incorporate monolithic integrated circuits and system-in-package devices that use proven high-volume technology. NXP products offer longer battery life, a smaller form factor, reduced component counts, lower cost, and improved performance in powering state-of-the-art systems.

2.1 Kit contents

The FRDM-GD3100EVM kit includes:

- Half-bridge gate driver board (KITGD3100EVB)
- Logic translator board (KITGD3100TREVB) attached to FRDM-KL25Z
- Two socket connectors for attaching Fuji Electric M653 IGBT module
- USB cable, type A male/type mini B male, 3 ft
- Quick start guide

2.2 Additional hardware

In addition to the kit contents, the following hardware is necessary or beneficial when working with this kit.

- Fuji Electric M653 or M661 IGBT module
- DC link capacitor compatible with IGBT
  - SBE Power Ring 700A186 500 µF, 500 V DC
- 50 mil jumpers for configuration
- 30 µH to 50 µH, high current air core inductor for double pulse testing
- HV power supply with protection shield and hearing protection
- 12 V, 1.0 A DC power supply
- Pulse generator
- TEK MSO 4054 500 MHz 2.5 GS/s 4-channel oscilloscope

All information provided in this document is subject to legal disclaimers.

© NXP B.V. 2020. All rights reserved.

- Rogowski coil, PEM Model CWT Mini HF60R or CTW Mini HF30 (smaller diameter)
- Two isolated high voltage probes (CAL Test Electric CT2593-1, LeCroy AP030)
- Four low voltage probes
- Two digital voltmeters

2.3 Windows PC workstation

This evaluation board requires a Windows PC workstation. Meeting these minimum specifications should produce great results when working with this evaluation board.

- Windows 10, 8 or 7 compatible PC with an available USB port

2.4 Software

Installing software is recommended to work with this evaluation board. All listed software is available on the evaluation board's information page at http://www.nxp.com/FRDM-GD3100EVM.

- SPIGen graphical user interface

3 Getting to know the hardware

3.1 Overview

The FRDM-GD3100EVM Rev C is a half-bridge evaluation kit populated with two GD3100 single channel IGBT gate drive devices on a half-bridge evaluation board. The kit includes the Freedom KL25Z microcontroller hardware for interfacing a PC installed with SPIGen software for communication to the SPI registers on the GD3100 gate drive devices in either daisy chain or standalone configuration.

The GD3100 translator board is used to translate 3.3 V signals to 5.0 V signals between the MCU and GD3100 gate drivers. The evaluation kit can be connected to a single phase of a Fuji Electric M653 or M661 IGBT module for half-bridge evaluations and applications development.

3.2 Board features

- Capability to connect to a Fuji Electric IGBT module for half-bridge gate driver evaluations
- SPI communication, capable of daisy chain or normal standalone operation
- Software configurable power and fail-safe controls
- Easy access power, ground and signal test points
- Easy to install and use SPIGen GUI for interfacing via SPI through PC. Software includes double pulse and short-circuit testing capability
- DC link bus voltage monitor on low-side driver via AMUXIN and AOUT

All information provided in this document is subject to legal disclaimers.

© NXP B.V. 2020. All rights reserved.

3.3 Device features

Table 1. Device features

Device	Description	Features
GD3100	The GD3100 is an advanced single channel gate driver for IGBTs.	• Compliant with ASIL C/D ISO 26262 functional safety requirements • SPI interface for safety monitoring, programmability and flexibility • Compatible with current sense and temp sense IGBTs • DESAT detection capability for detecting V_{CE} desaturation condition • Fast short-circuit protection for IGBTs with current sense feedback • Integrated Galvanic signal isolation • Integrated gate drive power stage capable of 15 A peak source and sink • Interrupt pin for fast response to faults • Compatible with negative gate supply • Complimentary PWM/PWMALT controls for dead time insertion • Independent fail-safe enable and fail-safe state controls • Compatible with 200 V to 1700 V IGBTs, power range > 125 kW

3.4 Board description

The FRDM-GD3100EVM Rev C is a half-bridge evaluation board populated with two GD3100 single channel IGBT gate drive devices. The board supports connection to a FRDM-KL25Z microcontroller for SPI communication and programming, through the use of a logic translator board. The board includes circuitry to enable the many features of the GD3100, such as IGBT short circuit detection and temperature sensing.

The evaluation board is designed to connect to a single phase of a Fuji M653 or M661 IGBT module for evaluation of the GD3100 performance and capabilities.

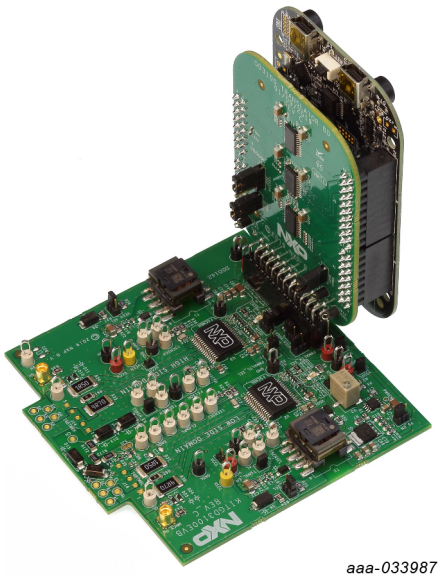

Figure 1. Assembled GD3100 half-bridge EVB, FRDM-KL25Z and translator board

All information provided in this document is subject to legal disclaimers.

© NXP B.V. 2020. All rights reserved.

3.4.1 Low-voltage logic and controls connector

Low-voltage domain is 12 V VSUP/VPWR domain that interfaces with the MCU and GD3100 control registers through the 24-pin connector interface.

Low-side driver and high-side driver domains are driver control interfaces to IGBT single phase connections and test points.

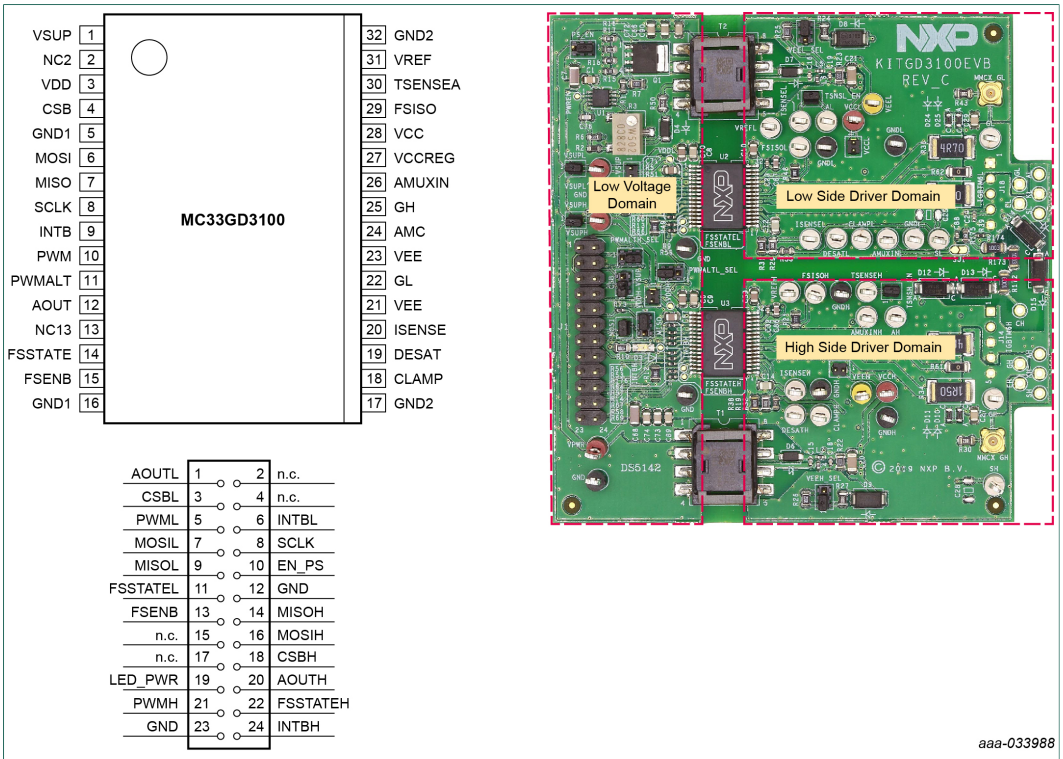

Figure 2. Evaluation board voltage and interface domains

Table 2. Low-voltage (LV) domain 24-pin connector definitions

Pin	Name	Function
1	AOUTL	Duty cycle encoded signal (low-side)
2	n.c.	No connection
3	CSBL	Chip select bar (low-side)
4	n.c.	No connection
5	PWML	PWM input (low-side)
6	INTBL	Interrupt bar (low-side)
7	MOSIL	Master out slave in (low-side)
8	SCLK	Serial clock input
9	MISOL	Master in slave out (low-side)
10	EN_PS	Enable power supplies for VCC/VEE
11	FSSTATEL	Fail-safe state (low-side)
12	GND	Ground
13	FSENB	Fail-safe enable (high-side and low-side)
14	MISOH	Master in slave out (high-side)

All information provided in this document is subject to legal disclaimers.

© NXP B.V. 2020. All rights reserved.

Pin	Name	Function
15	n.c.	No connection
16	MOSIH	Master out slave in (high-side)
17	n.c.	No connection
18	CSBH	Chip select bar (high-side)
19	LED_PWR	3.3 V supply for INTB LEDs (high-side and low-side)
20	AOUTH	Duty cycle encoded signal (high-side)
21	PWMH	PWM input (high-side)
22	FSSTATEH	Fail-safe state (high-side)
23	GND	Ground
24	INTBH	Interrupt bar (high-side)

3.4.2 Test point definitions

All test points are clearly marked on the evaluation board. Figure 3 shows the location of various test points.

All information provided in this document is subject to legal disclaimers.

© NXP B.V. 2020. All rights reserved.

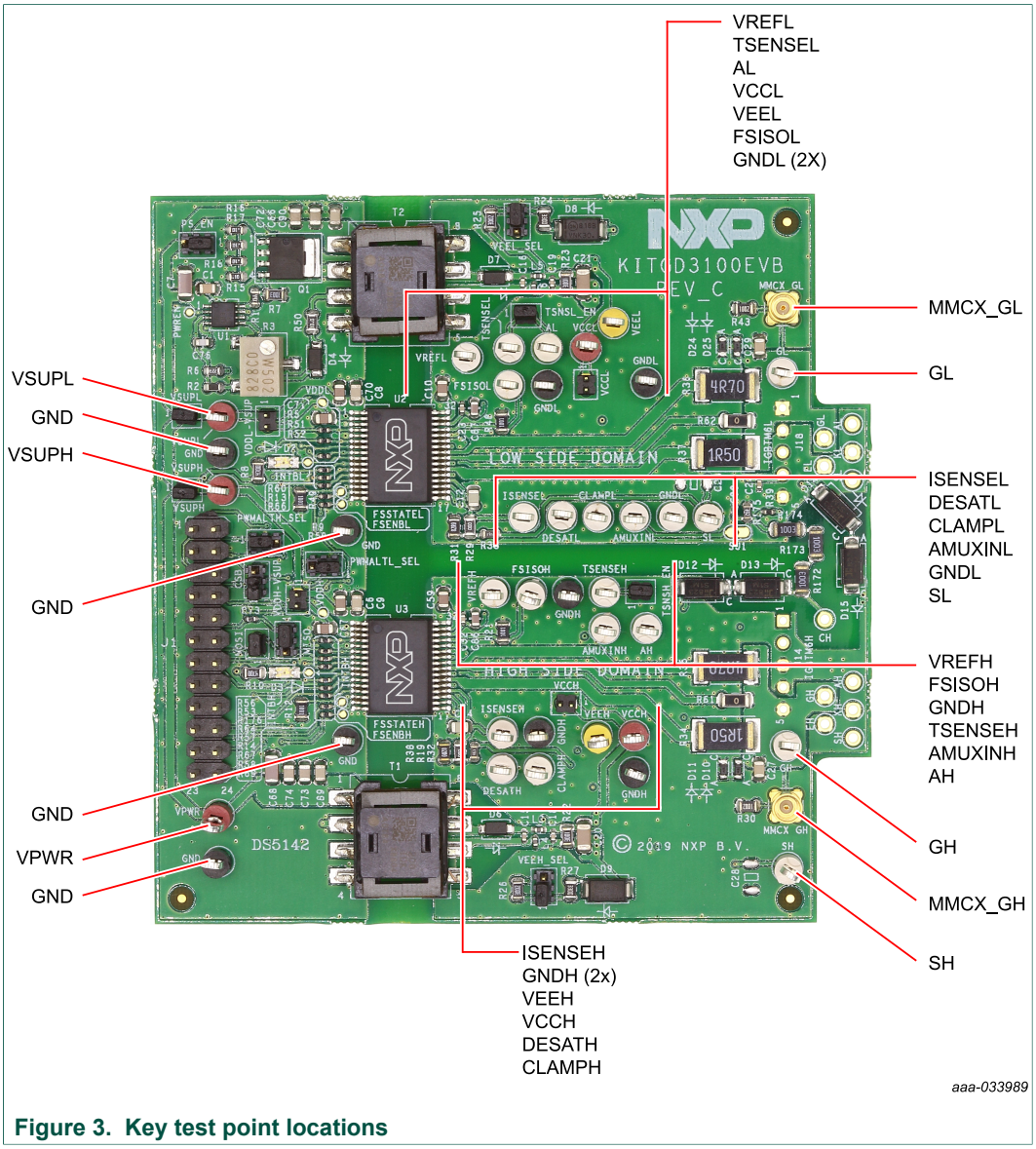

Figure 3. Key test point locations

Table 3. Driver board test point definitions

Test point	Reference designator	Definition
Low voltage (LV) domain		
GND	TP17, TP18, TP19, TP20	Grounding points for low-voltage domain
VPWR	TP3	DC voltage source connection point for VSUP power input of GD3100 devices and flyback power supplies. Typically supplies by vehicle battery +12 V DC, but can also be configured for +5 V DC operation.
VSUPL	TP47	Test point for VSUPL supply
VSUPH	TP4	Test point for VSUPH supply
Low-side (LS) driver domain		
AL	TP24	Anode test point to thermal diode on low-side IGBT connection

All information provided in this document is subject to legal disclaimers.

© NXP B.V. 2020. All rights reserved.

Test point	Reference designator	Definition
AMUXINL	TP31	Test point for analog MUX input for low-side driver. Can be used for monitoring DC bus voltage.
CLAMPL	TP29	VCE sense test point connected to low-side driver clamp pin and circuitry
DESATL	TP28	VCE desaturation test point connected to low-side driver DESAT pin and circuitry
FSISOL	TP25	Initiate fail-safe state control from HV domain for low-side driver
GL	TP26	Test point providing direct measurement of low-side IGBT gate
GNDL	TP32, TP33, TP34	Isolated low-side driver ground point. Connected to low-side IGBT emitter
ISENSEL	TP27	ISENSE test point connected to IGBT current sense and GD3100 low-side driver sense pin
MMCX_GL	J30	50 Ω connector (MMCX) providing direct measurement of low-side IGBT gate
SL	TP27	ISENSE test point close to IGBT current sense and connected to low-side driver sense pin
TSENSEL	TP36	Input for low-side IGBT temperature measurement. Onboard components optimized for use with IGBT thermal diode.
VCCL	TP21	Provides access to measure positive voltage supply powering HV die and gate driver for low-side IGBT
VEEL	TP30	Negative voltage supply test point for low-side driver gate of IGBT
VREFL	TP22	Monitor internal 5.0 V reference for analog circuitry on HV isolated die
High-side (HS) driver domain		
AH	TP6	Anode test point to thermal diode on high-side IGBT connection
AMUXINH	TP13	Test point for analog MUX input for high-side driver
CLAMPH	TP11	VCE sense test point connected to high-side driver clamp pin and circuitry
DESATH	TP10	VCE desaturation test point connected to high-side driver DESAT pin and circuitry
FSISOH	TP7	Initiate fail-safe state control from HV domain for high-side driver
GH	TP8	Test point providing direct measurement of high-side IGBT gate
GNDH	TP14, TP15, TP16	Isolated high-side driver ground point. Connected to high-side IGBT emitter and low-side IGBT collector
ISENSEH	TP9	ISENSE test point connected to IGBT current sense and GD3100 high-side driver sense pin
MMCX_GH	J29	50 Ω connector (MMCX) providing direct measurement of high-side IGBT gate
SH	TP9	ISENSE test point close to IGBT current sense and connected to high-side driver sense pin
TSENSEH	TP35	Input for high-side IGBT temperature measurement. Onboard components optimized for use with NTC
VCCH	TP2	Provides access to measure positive voltage supply powering HV die and gate driver for high-side IGBT
VREFH	TP5	Monitor internal 5.0 V reference for analog circuitry on HV isolated die
VEEH	TP12	Negative voltage supply test point for high-side driver gate of IGBT

All information provided in this document is subject to legal disclaimers.

© NXP B.V. 2020. All rights reserved.

3.4.3 Power related jumpers configuration

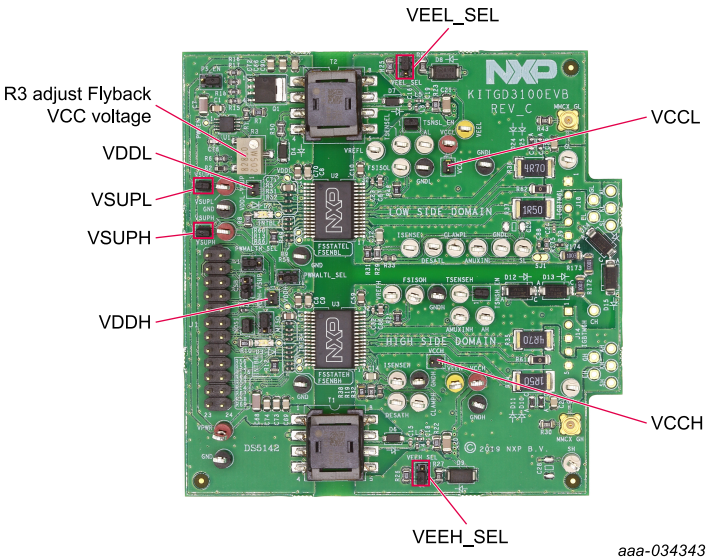

Figure 4. Power supply and jumpers configuration

Table 4. Power related jumper definitions

Jumper	Reference designator	Position	Function
VCCH	J4	Open	VCC regulator (VCCREG) active, gate driver (GH) uses VCCREG (default)
		Closed	VCC regulator (VCCREG) disabled, gate driver (GH) uses VCC
VEEH_SEL	J5	1-2	VEE is negative supply (default)
		2-3	VEE is tied to IGBT emitter (GNDISOH)
		Open	Not allowed. VCC and VEE float relative to IGBT emitter (GNDISOH)
VCCL	J7	Open	VCC regulator (VCCREG) active, gate driver (GH) uses VCCREG (default)
		Closed	VCC regulator (VCCREG) disabled, gate driver (GH) uses VCC
VEEL_SEL	J8	1-2	VEE is negative supply (default)
		2-3	VEE is tied to IGBT emitter (GNDISOL)
		Open	Not allowed. VCC and VEE float relative to IGBT emitter (GNDISOL).
VSUPH	J12	Open	VSUP power to gate drive device must be supplied at TP4
		Closed	Must be closed to supply VPWR to VSUP pin on gate drive device (default)
VDDH	J13	Open	VDD-VSUP are separate. Device powered from VSUP, VDD uses internal regulator (default)
		Closed	VDD-VSUP connected. VDD internal regulator bypassed. Device powered by external 5.0 V.

All information provided in this document is subject to legal disclaimers.

© NXP B.V. 2020. All rights reserved.

Jumper	Reference designator	Position	Function
VDDL	J16	Open	VDD-VSUP are separate. Device powered from VSUP, VDD uses internal regulator (default)
		Closed	VDD-VSUP connected. VDD internal regulator bypassed. Device powered by external 5.0 V.
VSUPL	J33	Open	VSUP power to gate drive device must be supplied at TP47
		Closed	Must be closed to supply VPWR to VSUP pin on gate drive device (default)

The FRDM-GD3100EVM Rev C provides configurability for different gate driver power architectures. Steps for some common configurations are summarized below. The jumper functionalities are detailed in Table 4.

3.4.3.1 Configuring power delivery to GD3100

To configure GD3100 for 12 V power - open VDD, provide 12 V to VPWR connection (default):

- Open VDDH (J13) jumper
- Open VDDL (J16) jumper
- Connect 12 V to VPWR (TP3)

To configure GD3100 for 5.0 V power - short VDD to VSUP, provide 5.0 V to VSUP connection:

- Short VDDH (J13) jumper
- Short VDDL (J16) jumper
- Connect 5.0 V or 12 V to VPWR (TP3)
- To isolate VPWR and VSUP open jumper J33 and J12 and power VSUP from TP4 and TP47

3.4.3.2 Configuring VEE for gate drive (GL)

To configure for negative VEE, provided by onboard Zener network (default):

- Connect VEEH_SEL (J5) jumper to 1-2
- Connect VEEL_SEL (J8) jumper to 1-2
- VEE for high-side provided by Zener (D9) and bias resistors (R26, R27)
- VEE for low-side provided by Zener (D8) and bias resistors (R24, R25)

To configure for VEE = 0 V, VEE tied to IGBT emitter:

- Connect VEEH_SEL (J5) jumper to 2-3
- Connect VEEL_SEL (J8) jumper to 2-3
- Tune VCC-VEE output voltage (high and low sides) with feedback resistor (R20)

3.4.3.3 Configuring VCC for gate drive (GH)

To utilize internal VCC regulator (VCCREG = ~15 V) for gate drive (default):

- Open VCCH (J4) jumper
- Open VCCL (J7) jumper
- Ensure VCCREG is fixed around 15 V above isolated GNDH, GNDL

To disable VCC regulator, drive gate directly from VCC:

All information provided in this document is subject to legal disclaimers.

© NXP B.V. 2020. All rights reserved.

- Short VCCH (J4) jumper
- Short VCCL (J7) jumper
- Tune VCC-GNDx output voltage (high and low sides) with feedback resistor (R3)

3.4.4 Signal related jumpers and configuration

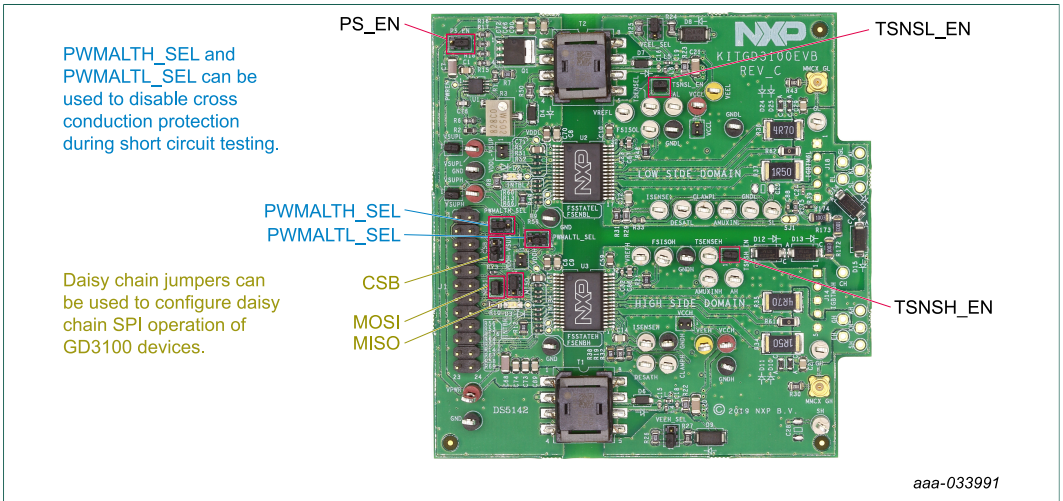

Figure 5. Signal related jumper locations

Table 5. Signal related jumper configurations

Jumper	Reference designator	Position	Function
CSB	J17	1-2	Separate CSBH and CSBL. Use for normal mode (default)
		2-3	CSBH and CSBL tied together. Use for daisy chain.
		Open	Not allowed. Only CSBL will be active, not recommended for normal use.
MOSI	J19	Closed	MOSIH is routed directly to MCU. Use for normal SPI mode (default)
		Open	MOSIH receives MISOL signal. Use for daisy-chain SPI mode.
PS_EN	J20	1-2	MCU/software controls VCC/VEE power supply (default).
		2-3	VCC/VEE power supplies always enabled. MCU control signal is disconnected
		Open	Passive pulldown (R14) disables VCC/VEE power supplies
PWMALTL_ SEL	J21	1-2	PWMALTL receives complementary PWMH signal. Enables dead time protection (default).
		2-3	PWMALTL is grounded. Bypasses dead time control (i.e. double-pulse, short-circuit test).
		Open	Not allowed. PWMALTL is in an unknown state.
PWMALTH_ SEL	J22	1-2	PWMALTH receives complementary PWML signal. Enables dead time protection (default).
		2-3	PWMALTH is grounded. Bypasses dead time control (i.e. double-pulse, short-circuit test).
		Open	Not allowed. PWMALTH is in an unknown state.

All information provided in this document is subject to legal disclaimers.

© NXP B.V. 2020. All rights reserved.

Jumper	Reference designator	Position	Function
MISO	J23	1-2	MISOL is passed directly to MCU. Use for normal SPI mode. (default)
		2-3	MISOL is passed to MOSIH. Use for daisy-chain SPI mode.
		Open	Not allowed. MISOL is not routed anywhere for valid communication.
AMUXINL	SJ1	Short	Solder shorting jumper to enable DC Link voltage measurement to AMUXIN on low side gate drive device. Open, Default AMUXINL not connected to DC bus voltage divider.
		Open	AMUXINL not connected to DC bus voltage divider. (default)
TSNSH_EN	J11	Closed	TSENSEA pin and filter are connected to the module temperature sense. Use when IGBT temperature sense is available. (default)
		Open	TSENSEA pin and filter are disconnected from the module. Use when IGBT temperature sense is not available. Suggest to disable TSENSE feature and populate pull-up resistor to VREF.
TSNSL_EN	J10	Closed	TSENSEA pin and filter are connected to the module temperature sense. Use when IGBT temperature sense is available. (default)
		Open	TSENSEA pin and filter are disconnected from the module. Use when IGBT temperature sense is not available. Suggest to disable TSENSE feature and populate pull-up resistor to VREF.

The FRDM-GD3100EVM Rev C provides configurability for accessing the GD3100 under a few different controls schemes. Some common configurations are summarized below, along with steps to adapt the driver board are described. The jumper functionalities are detailed in Table 5.

3.4.4.1 SPI configuration options

To configure for normal SPI; low and high side GD3100s are addressable separately (default):

- Set CSB (J17) jumper to 1-2
- Set MISO (J23) jumper to 1-2
- Short MOSI (J19) jumper
- From SPIGen, “SPI0” addresses low-side GD3100 (U4) with CSBL; use “SPI1” to address high-side GD3100 (U3) with CSBH.

To configure both GD3100 in daisy-chain configuration:

- Set CSB (J17) jumper to 2-3
- Set MISO (J23) jumper to 2-3
- Open MOSI (J19) jumper
- From SPIGen, use “SPI0” to address both devices in daisy-chain configuration; “SPI1” will be inactive.

All information provided in this document is subject to legal disclaimers.

© NXP B.V. 2020. All rights reserved.

3.4.4.2 Configuring dead time application in hardware

To enable dead time and cross-conduction protection, PWMALT receives complimentary signals (default):

- Set PWMALTH_SEL (J22) to 1-2
- Set PWMALTL_SEL (J21) to 1-2

To bypass dead time insertion (set PWMALT = 0) for specialized testing:

- Set PWMALTH_SEL (J22) to 2-3
- Set PWMALTL_SEL (J21) to 2-3

3.4.4.3 Setting method of power supply control (VCCx, VEEx)

VCC and VEE flyback controllers are always ON (default):

- Connect PS_EN (J20) jumper to 2-3

Allow control to turn VCC/VEE flyback supplies ON/OFF:

- Connect PS_EN (J20) jumper to 1-2
- Utilize Enable VCC/VEE on SPIGEN GUI to enable or disable the power supplies

3.4.5 Bottom view

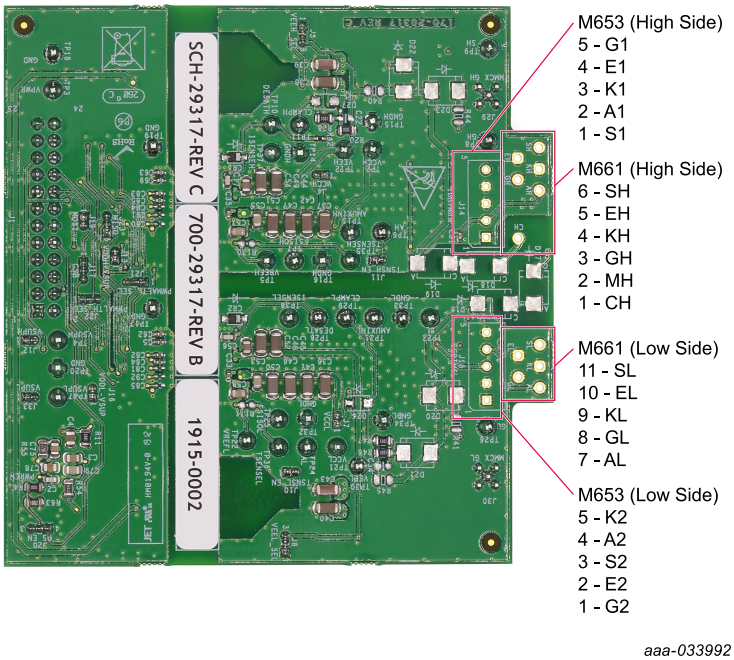

Figure 6. GD3100 evaluation board bottom view

3.4.6 Gate drive resistors

- RGH - gate high resistor in series with the GH pin at the output of the GD3100 high-side driver and IGBT gate that controls the turn-on current for IGBT gate.
- RGL - gate low resistor in series with the GL pin at the output of the GD3100 low-side driver and IGBT gate that controls the turn-off current for IGBT gate.

All information provided in this document is subject to legal disclaimers.

© NXP B.V. 2020. All rights reserved.

- RAMC - series resistor between IGBT gate and AMC input pin of the GD3100 high-side/low-side driver for gate sensing and Active Miller clamping.

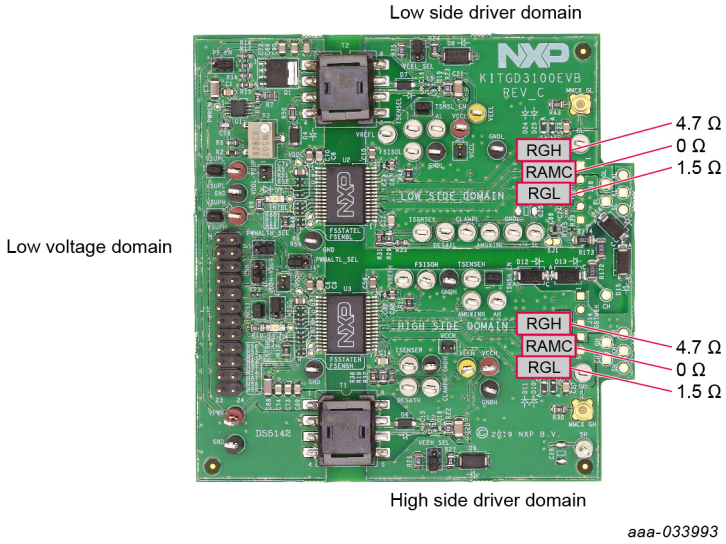

Figure 7. Gate drive resistors

3.4.7 LED interrupt indicators

Interrupt LEDs are provided to visually alert the user of a reported fault. The LEDs are supplied with 3.3 V from the KL25Z, and are driven directly by the INTB pin of the respective GD3100 device.

- D3 (INTBH) LED is ON while fault is being reported (INTB low). LED is OFF while no fault is reported (INTB high).
- D2 (INTBL) LED is ON while fault is being reported. LED is OFF while no fault is reported (INTB high).

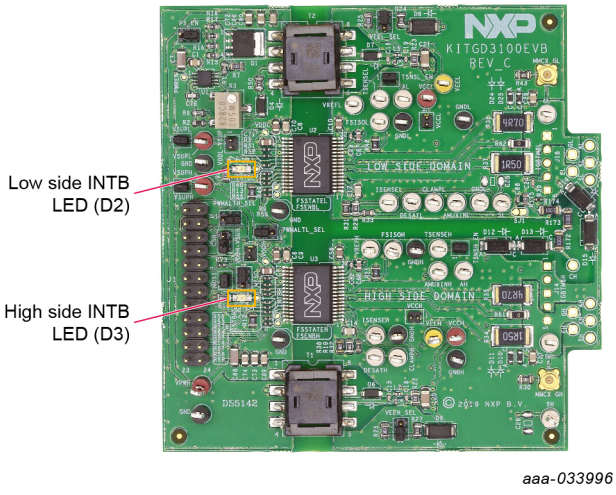

Figure 8. LED interrupt indicators

All information provided in this document is subject to legal disclaimers.

© NXP B.V. 2020. All rights reserved.

Table 6. Interrupt LED definitions

LED	Reference designator	Description
Low-side INTB	D2	Connected to the INTB output pin (active low) of low-side GD3100 • LED is ON: indicates reported fault, check system • LED is OFF: indicates no reported fault
High-side INTB	D3	Connected to the INTB output pin (active low) of high-side GD3100 • LED is ON: indicates reported fault, check system • LED is OFF: indicates no reported fault

3.5 Kinetis KL25Z freedom board

The Freedom KL25Z is an ultra-low-cost development platform for Kinetis® L Series MCU built on Arm® Cortex®-M0+ processor.

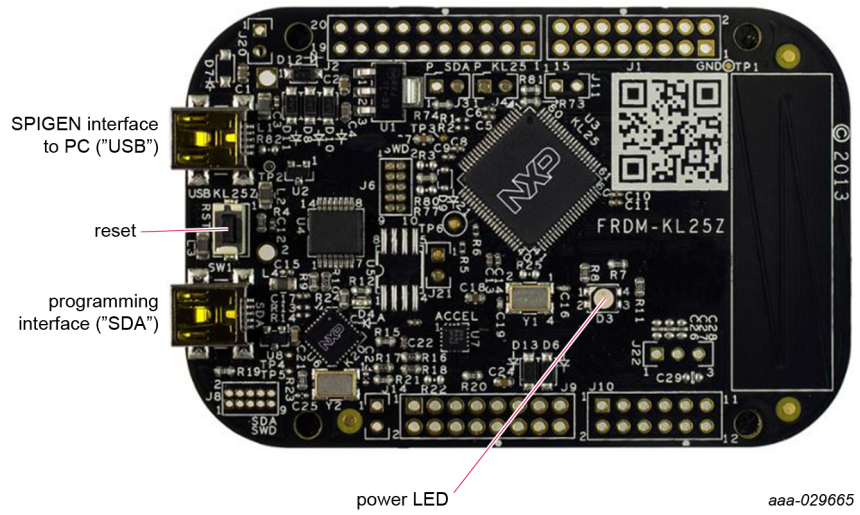

Figure 9. Freedom Development Platform

3.6 Logic translator board

The FRDM-GD3100EVM Rev C includes a logic translator board, which provides simple isolation and is capable of level-shifting communication signals between the MCU and the GD3100 driver board. The driver board is exposed to high voltage, and may require 3.3 V or 5.0 V logic, necessitating an interface board.

Various signals, like the SPI communication, interrupt, fail-safe controls, and PWM pass through the translator board. The translator board provides a configurable output voltage (3.3 V or 5.0 V) going out to the GD3100 driver board.

The translator board also provides the choice of using PWM signals from the MCU, or wiring in an external control from a function generator. Jumper configurations are explained in Figure 10 and Table 7. Test points are reviewed in Table 8.

All information provided in this document is subject to legal disclaimers.

© NXP B.V. 2020. All rights reserved.

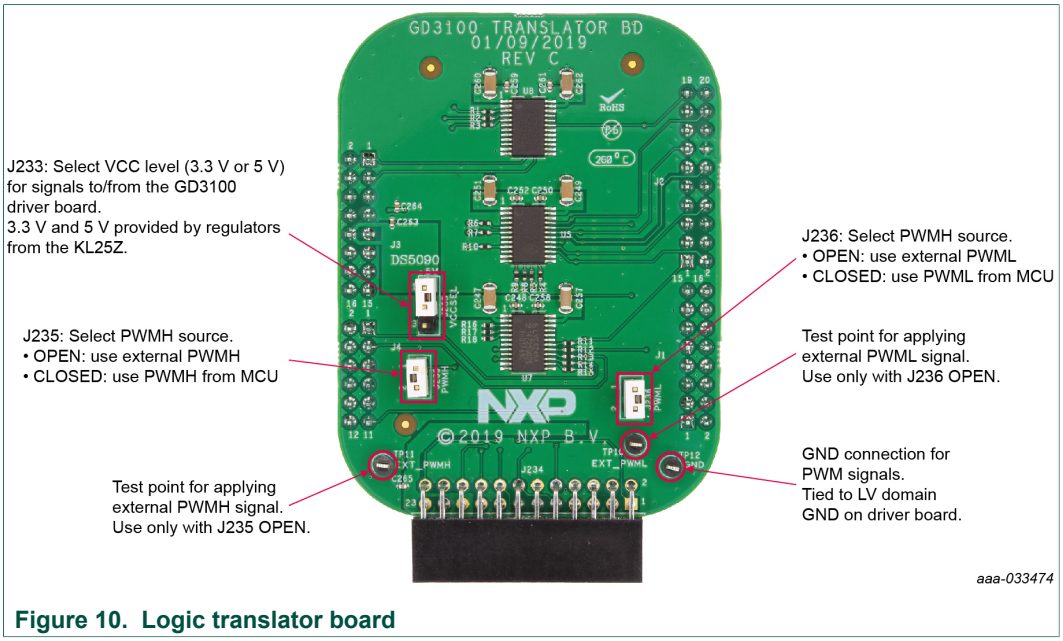

Figure 10. Logic translator board

Table 7. Translator board jumper functionality

Jumper	Reference designator	Position	Function
VCCSEL	J233	1-2	5.0 V regulator from KL25Z powers all translator VCC, 5.0 V signals to/from the driver board (default) • Use with 5.0 V GD3100 (MC33GD3100EK)
		2-3	3.3 V regulator from KL25Z powers all translator VCC, 3.3 V signals to/from the driver board • Use with 3.3 V version of GD3100 (MC33GD3100A3EK)
		Open	Not allowed. There is no power provided to logic translators, and no signals will be passed to the driver board. • Provide external power to J233, pin 2 (max 5.5 V) to enable communications
PWMH	J235	Closed	PWMH signal from MCU is passed to the driver board (default)
		Open	External signal for PWMH must be provided at EXT_PWMH (TP11)
PWML	J236	Closed	PWML signal from MCU is passed to the driver board (default)
		Open	External signal for PWML must be provided at EXT_PWML (TP10)

Table 8. Translator board test point definition

Test point	Reference designator	Definition
EXT_PWML	TP10	PWML signal provided to driver board
EXT_PWMH	TP11	PWMH signal provided to driver board
GND	TP12	GND connection for translator, also connected to GND on LV domain of driver board

All information provided in this document is subject to legal disclaimers.

© NXP B.V. 2020. All rights reserved.

The translator board in FRDM-GD3100EVM Rev C supports different configurations for various application tests. The translator supports PWM from either the KL25Z (see Section 3.6.1 "Configuring the translator for KL25Z-controlled PWM") or from external source (see Section 3.6.2 "Configuring the translator for external PWM control"), one of these implementations will be used in testing. Similarly, based on the GD3100 device populated, the translator will need to support either 5.0 V logic (see Section 3.6.3 "Configuring the translator for 5.0 V logic operation") or 3.3 V logic (see Section 3.6.4 "Configuring the translator for 3.3 V logic operation").

3.6.1 Configuring the translator for KL25Z-controlled PWM

By default, the translator is setup to send PWM signals generated on the KL25Z out to the driver board. These signals pass through the translator and are level-shifted according to the translator's own configuration. Test points EXT_PWML (TP10) and EXT_PWMH (TP11) are available to monitor commanded PWM state.

To configure the translator board for KL25Z-controlled PWM, perform the following:

1. Short PWMH (J235) jumper.
2. Short PWML (J236) jumper.
3. Use SPIGen to apply double-pulse, short-circuit, or PWM waveforms.

3.6.2 Configuring the translator for external PWM control

The translator may be setup to pass externally provided signals to the driver board, normally applied at EXT_PWML (TP10) and EXT_PWMH (TP11) test points. These signals do not pass through the translator, so their logic level must match those required by the GD3100 populated on the driver board.

To configure the translator board for external PWM control, perform the following:

1. Open PWMH (J235) jumper.
2. Open PWML (J236) jumper.
3. Apply desired PWM function between EXT_PWML (TP10) and GND (TP12).
4. Apply desired PWM function between EXT_PWMH (TP11) and GND (TP12).

3.6.3 Configuring the translator for 5.0 V logic operation

This configuration is for use with the 5.0 V gate driver device (MC33GD3100EK) populated on the driver board. The attached KL25Z has a 5.0 V supply (drawn from USB power bus) that is pinned out to the translator for this purpose.

To configure the translator board to send/receive 5.0 V logic level signals, perform the following:

1. Set VCCSEL (J233) jumper to 1-2.

3.6.4 Configuring the translator for 3.3 V logic operation

This configuration is for use with the 3.3 V gate driver device (MC33GD3100A3EK) populated on the driver board. The attached KL25Z has a 3.3 V regulator onboard that is pinned out to the translator for this purpose.

To configure the translator board to send/receive 3.3 V logic level signals, perform the following:

1. Set VCCSEL (J233) jumper to 2-3.

All information provided in this document is subject to legal disclaimers.

© NXP B.V. 2020. All rights reserved.

4 Configuring the hardware

4.1 System setup

FRDM-GD3100EVM Rev C is connected to any phase of an Fuji Electric M653 or M661 IGBT module with SBE DC Link capacitor as shown in Figure 11. Double pulse and short-circuit testing can be conducted utilizing Windows based PC with SPIGEN software.

Suggested equipment needed for testing:

- Rogowski coil high current probe
- High voltage differential voltage probe
- High sample rate digital oscilloscope with probes
- DC link capacitor
- Fuji Electric M653 or M661 IGBT module
- Windows 10, 8 or 7 compatible PC with an available USB port
- High voltage DC power supply for DC link
- Low voltage DC power supply for VSUP/GD3100PWR
  - +12 V DC gate drive board low voltage domain
- Voltmeter for monitoring high voltage DC Link supply
- Load coil for double pulse and short-circuit type 2 testing

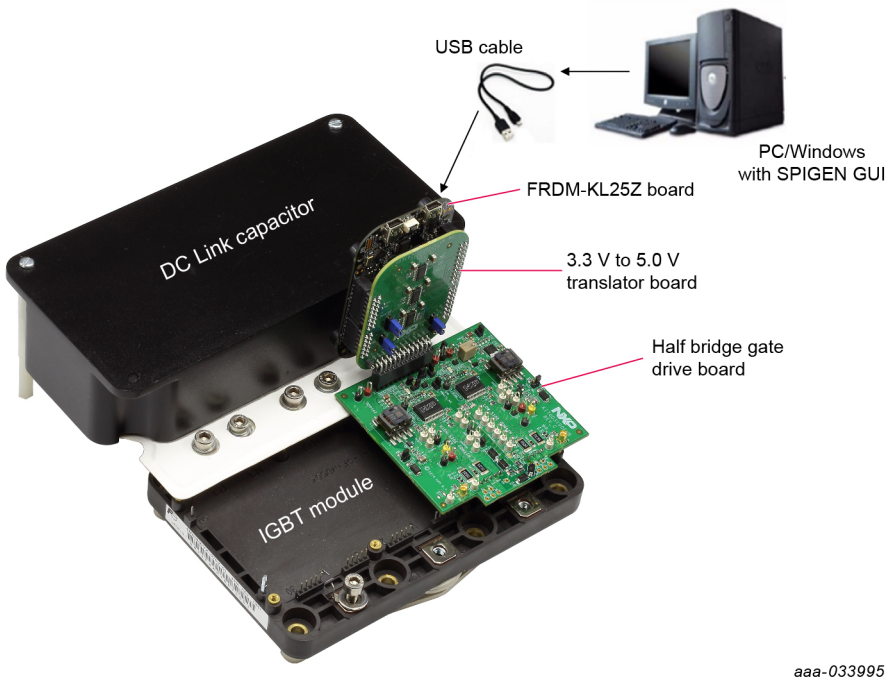

Figure 11. Evaluation board and system setup

All information provided in this document is subject to legal disclaimers.

© NXP B.V. 2020. All rights reserved.

4.2 Quick start

4.2.1 Scope and purpose

This section provides comprehensive quick start notes for the FRDM-GD3100EVM Rev C half-bridge evaluation kit. Within a few minutes the user can install SPIGEN application on a PC, power up the half-bridge evaluation kit, start SPI communication, and pass PWM signals to evaluate working operation.

4.2.2 Intended audience

Experienced engineers evaluating GD3100 gate drive device for IGBT control.

4.2.3 Setting up and connecting the evaluation kit

1. Download and Install latest SPIGEN software – Windows application from NXP.com to your PC (see Section 5.2 "Configuring the FRDM-KL25Z microcode").
2. Assemble the FRDM-GD3100EVM Rev C with KL25Z micro board and translator board as shown in Figure 1.
3. Check jumper configuration on the evaluation board before powering up, and ensure the configuration meets desired use case.
   a. The default jumper configuration (shipped from factory) is setup normal SPI (non-daisy chain) communication with high-side and low-side driver domains VEE negative supply level active. Also, ensure jumper J233 is populated on Translator board for powering KL25Z micro.
   b. For alternate configurations and setup details, see Section 3.4.3, Section 3.4.4 "Signal related jumpers and configuration", and Section 3.4.7 "LED interrupt indicators".
4. Start SPIGEN application software on PC. Connect USB cable from PC to USBKL25Z port on KL25Z micro board. A successful connection results in a connection successful pop-up (reading "SPI dongle is connected") on the PC with SPIGEN application running.
   a. KL25Z micro shipped with proper firmware is already flashed. See Section 5 "Installation and use of software tools" for additional details.
5. Next supply 12 V DC power to low voltage domain of evaluation board (12 V DC to VSUP connection point and grounding to GND1 connection point on low voltage domain).
6. Check high-side and low-side driver domain regulated voltage level by checking VCCH and VCCL test points for ~17 V DC with respect to grounding to points GNDH and GNDL in each domain respectively.
   a. If voltage level on VCCH and VCCL are low adjust R3 potentiometer for proper level as shown in Figure 4.
7. With proper PC interface connection and voltage levels, SPI communication can be conducted with GD3100 devices over SPIGen as described in Section 5.3 "Using the SPIGEN graphical user interface". See GD3100 data sheet for additional details.
   a. Selecting SPI0 communicates with low-side gate drive device and SPI1 communicates with high-side gate drive device (see Figure 13).
8. Apply PWM signals to each gate drive. Gate drive output can be observed on high-side and low-side driver devices with test points (GH, GL), or 50 Ω port (MMCX GATE H/L).

All information provided in this document is subject to legal disclaimers.

© NXP B.V. 2020. All rights reserved.

a. To receive PWM as provided by the KL25Z, see Section 3.6.1 "Configuring the translator for KL25Z-controlled PWM". Use SPIGen to control, see Section 5.3.4 "Pulse test".
b. b. To set up for external PWM control, see Section 3.6.2 "Configuring the translator for external PWM control". Apply a control signal with an external function generator.

9. For double pulse and short-circuit testing with an IGBT and inductive load, use the "Pulse test" view as part of the SPIGen GUI. Set parameterized pulse widths commanded by the KL25Z.
   a. For short-circuit testing, PWMALTL_SEL and PWMALTH_SEL must be configured so as to bypass dead time control (see Section 3.4.4.2 "Configuring dead time application in hardware").

5 Installation and use of software tools

Software for FRDM-GD3100EVM Rev C is distributed with the SPIGen GUI tool (available on NXP.com). Necessary firmware comes pre-installed on the FRDM-KL25Z with the kit.

Even if the user intends to test under other software or PWM, it is recommended the user install this software below as a backup or in help debugging.

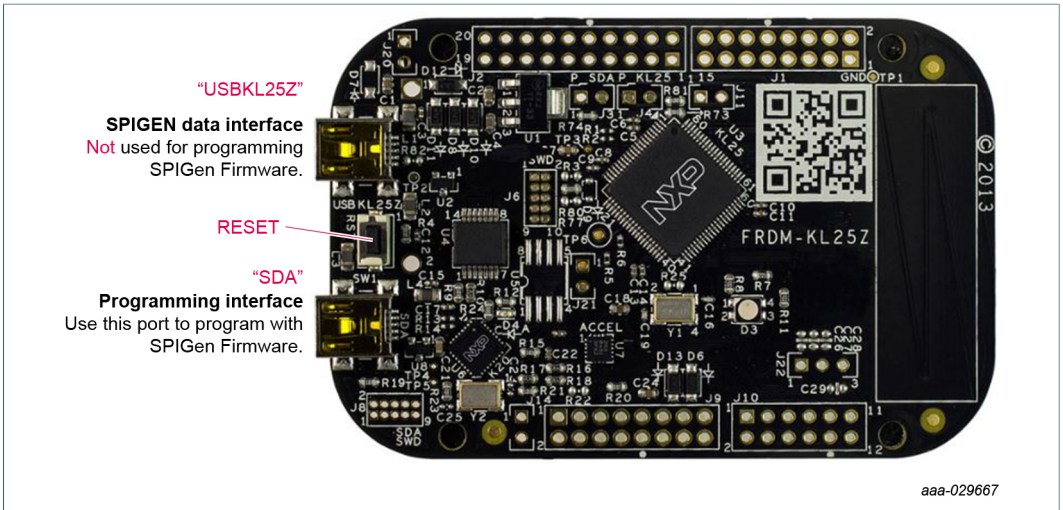

Figure 12. FRDM-KL25Z setup and interface

5.1 Installing SPIGen on your computer

The latest version of SPIGen supports the GD3100 and is designed to run on any Windows 10, Windows 8, or Windows 7-based operating system. To install the software, do the following:

1. Go to www.nxp.com/SPIGen and click **Download**.
2. When the SPIGEN: SPI Generator (SPIGen) software page appears, go to the **Lab and Test Software** section and click **Download** associated with the description of the selected environment. A wizard guides the user through the process.
3. If instructed for the SPIGen wizard to create a shortcut, a SPIGen icon appears on the desktop. By default, the SPIGen executable file is installed at **C:\Program Files (x86)\SPIGen**.

All information provided in this document is subject to legal disclaimers.

© NXP B.V. 2020. All rights reserved.

Installing the device drivers overwrites any previous SPIGen installation and replaces it with a current version containing the GD3100 drivers. However, configuration files (.spi) from the previous version remain intact.

5.2 Configuring the FRDM-KL25Z microcode

By default, the FRDM-KL25Z with this kit is preprogrammed with the current and most up-to-date firmware available for the kit.

A way to quickly check that the microcode is programmed and board is functioning properly, is to plug the KL25Z into the computer, open SPIGen, and verify the software version at the bottom is 5.4.7 software (see Figure 13).

In the event of a loss of functionality following a board reset, reprogramming, or a corrupted data issue, the microcode may be rewritten per the following steps:

1. To clear the memory and place the board in boot loader mode, hold down the reset button while plugging a USB cable into the **OpenSDA** USB port.
2. Verify the board appears as a “BOOTLOADER” device and continue to step 3. If the board appears as KL25Z, you may skip to step 6.
3. Download the **Firmware Apps** .zip archive from the PEMicro OpenSDA webpage (http://www.pemicro.com/opensda/). Validate your email address to access the files.
4. Find the most recent MDS-DEBUG-FRDM-KL25Z_Pemicro_v***.SDA and copy/drag-and-drop into the **BOOTLOADER** device.
5. Reboot the board by unplugging and re-plugging the connection to the **OpenSDA** port. Verify now the device appears as a “KL25Z” device to continue.
6. Locate the most recent KL25Z firmware; this is distributed as part of the SPIGen package.
   a. From the SPIGen install directory, this is located in the **SPI Dongle Firmware** folder and is named of the form “UsbSPIDongleKL25Z_GD3100_v***.srec”.
      - When using translator revC, use the firmware version 5.4.7 or later.
      - When using the translator revB, use the firmware version only up to 5.4.6, to maintain backward compatibility and pinout.
   b. This .srec file is a product/family-specific configuration file for FRDM-KL25Z containing the pin definitions, SPI/PWM generation code, and pin mapping assignments necessary to interface with the translator board as part of FRDM-GD3100EVM Rev C.
7. With the KL25Z still plugged through the **OpenSDA** port, copy/drag-and-drop the .srec file into the KL25Z device memory. Once done, disconnect the USB and plug into the other USB port, labeled **KL25Z**.
   a. The device may not appear as a distinct device to the computer while connected through the KL25Z USB port, this is normal.
8. The FRDM-KL25Z board is now fully set up to work with FRDM-GD3100EVM Rev C and the SPIGen GUI.
   a. There is no software stored or present on either the driver or translator boards, only on the FRDM-KL25Z MCU board.

All uploaded firmware is stored in non-volatile memory until the reset button is hit on the FRDM-KL25Z. There is no need to repeat this process upon every power up, and there is no loss of data associated with a single unplug event.

All information provided in this document is subject to legal disclaimers.

© NXP B.V. 2020. All rights reserved.

5.3 Using the SPIGEN graphical user interface

The SPIGen graphical user interface is available from NXP.com as an evaluation tool demonstrating GD3100-specific functionality, configuration, and fault reporting. SPIGen also includes basic capacity for the FRDM-GD3100EVM Rev C to control an IGBT, enabling double-pulse or short-circuit testing.

SPI messages can be realized graphically or in hexadecimal format, and the CSB is selectable to address one or both GD3100 present on the board. See Figure 13 for SPIGen graphical user interface for GD3100 internal register read and write access.

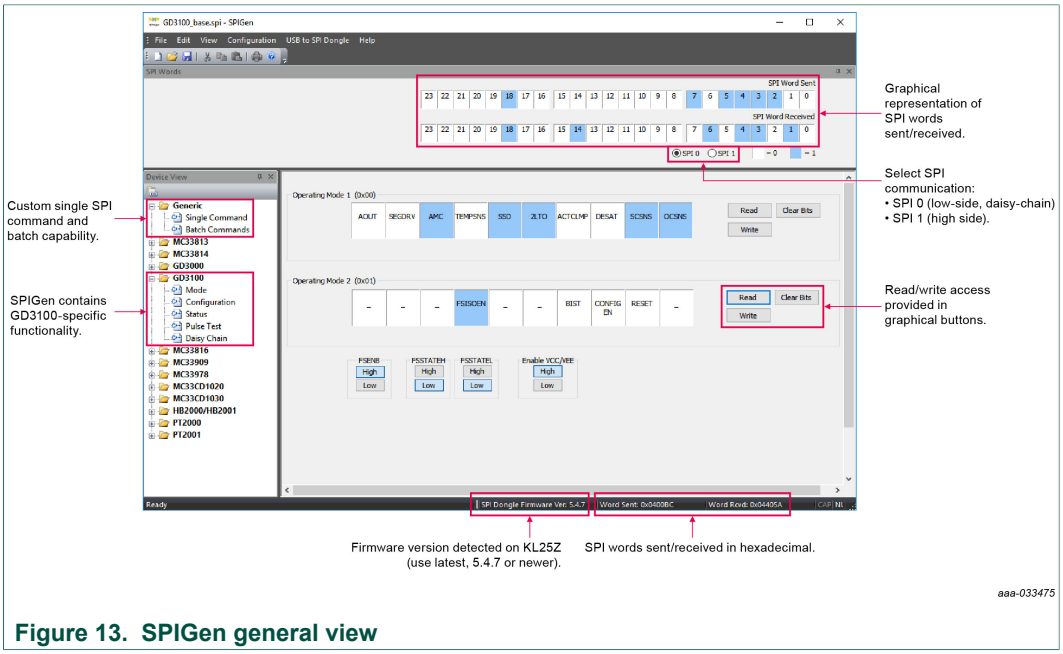

Figure 13. SPIGen general view

Some general guidelines on SPIGen usage:

- When attempting to change operating modes, configuration registers, or status mask bits, ensure the CONFIG_EN bit in the MODE2 register is set to 1. Fault status bits can be cleared without CONFIG_EN being set to 1.
- On Mode, Configuration, and Status views, READ operations send identical back-to-back commands so the response is obtained upon a single click of the “Read” button. This is normal SPI operation, but is implemented this way for the end-user’s convenience.
- On Daisy Chain view, only one READ operation is performed per click. Two READ operations must be performed to obtain response data.
- On all views, WRITE operations are only performed once per click.

5.3.1 Mode registers

See Figure 14 for an overview of control options available on the “Mode” view on SPIGen. See GD3100 data sheet for a complete description of MODE1 and MODE2 registers and pin functionalities. The onboard flyback power supply providing VCC and VEE for the HV domains can be enabled (default) or disabled in the event and external supply or characteristic is desired.

All information provided in this document is subject to legal disclaimers.

© NXP B.V. 2020. All rights reserved.

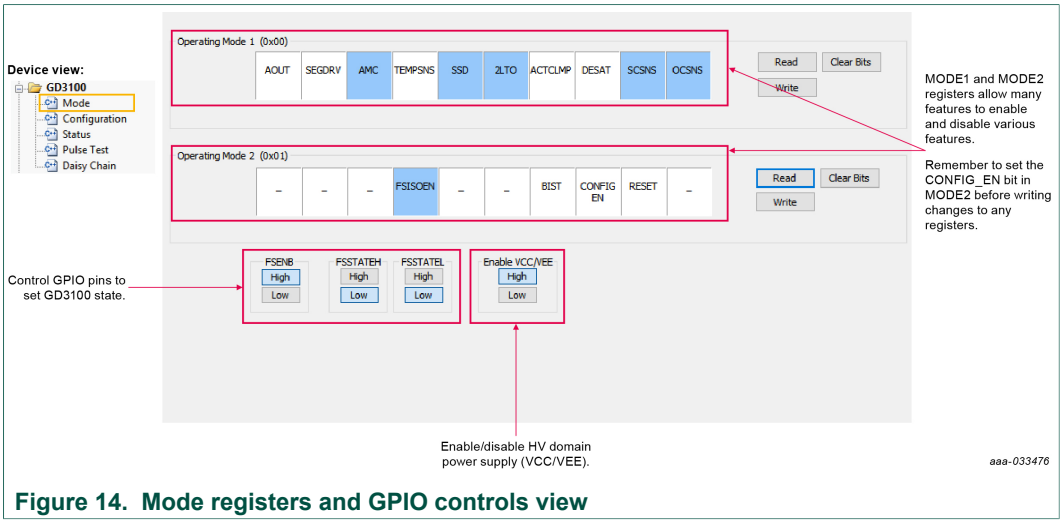

Figure 14. Mode registers and GPIO controls view

5.3.2 Configuration register

See GD3100 data sheet for configuration SPI register descriptions.

When attempting to change configuration parameters, ensure the CONFIG_EN bit in the MODE2 register is set to 1. READ operations send identical back-to-back commands so the response is obtained upon a single click of the **Read** button. WRITE operations are only performed once per click.

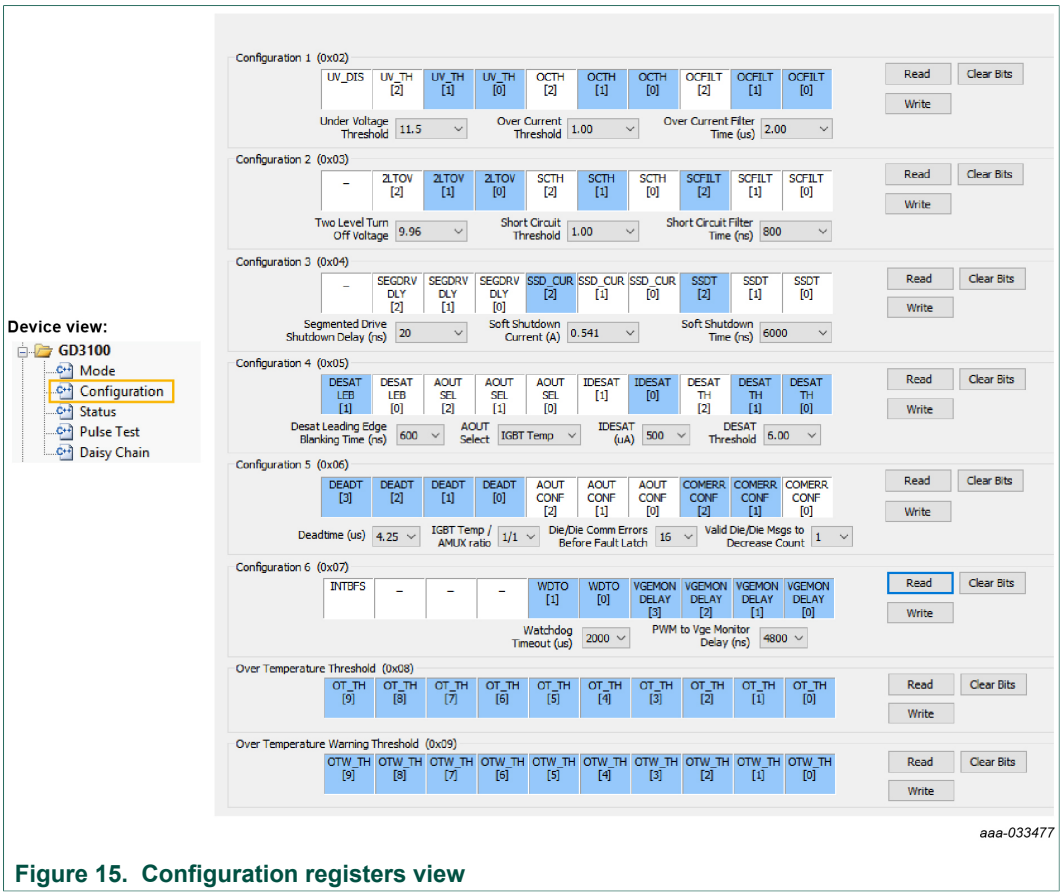

Figure 15. Configuration registers view

All information provided in this document is subject to legal disclaimers.

© NXP B.V. 2020. All rights reserved.

5.3.3 Status and mask register

See GD3100 data sheet for status and mask SPI register descriptions. INTB indicators mirror the status of the INTB pin on both high-side and low-side GD3100 simultaneously, but only one (either high-side or low-side) can be read at a time over SPI (selected by “SPI 0” or “SPI 1”) in this view.

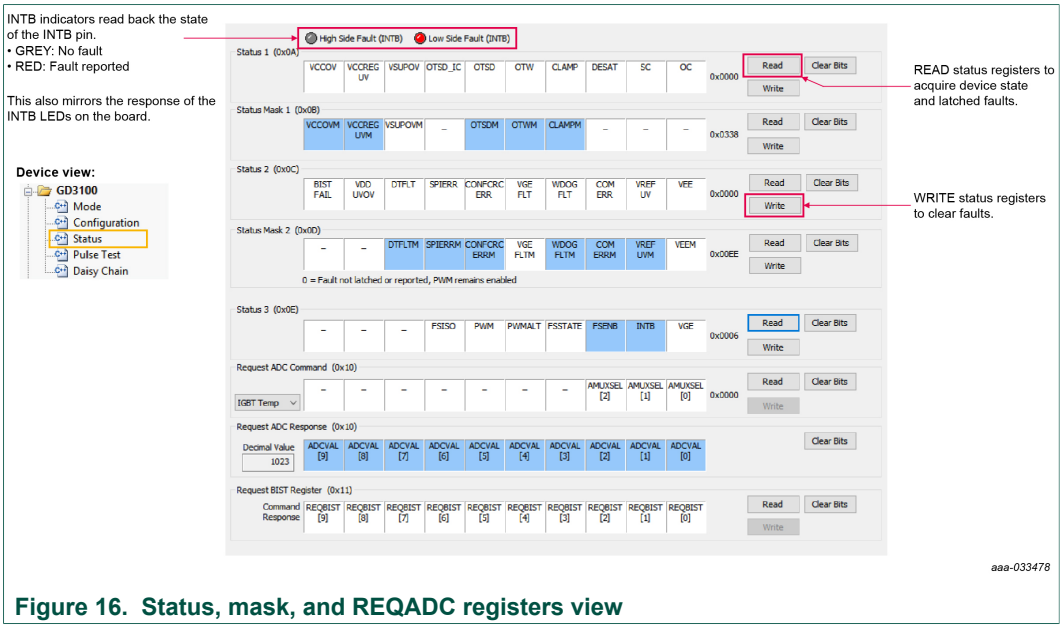

Figure 16. Status, mask, and REQADC registers view

5.3.4 Pulse test

The Pulse test view allows a few simple waveforms to be applied to the PWM and PWMALT pins, to evaluate with an IGBT.

For double pulse test, short-circuit test, and short-circuit test 2, it is recommended to bypass dead time protection, as described in Section 3.4.4.2 "Configuring dead time application in hardware" so the desired pulse is not distorted by the dead time protection.

For a repeating PWM waveform provided by a timer pin on the KL25Z, use the "PWM Controls" to define frequency and duty cycle. The duty cycle is referenced to PMWH (for example, when duty cycle is set at 80 %, PWMH = 80 %, PWML = 20 %).

All information provided in this document is subject to legal disclaimers.

© NXP B.V. 2020. All rights reserved.

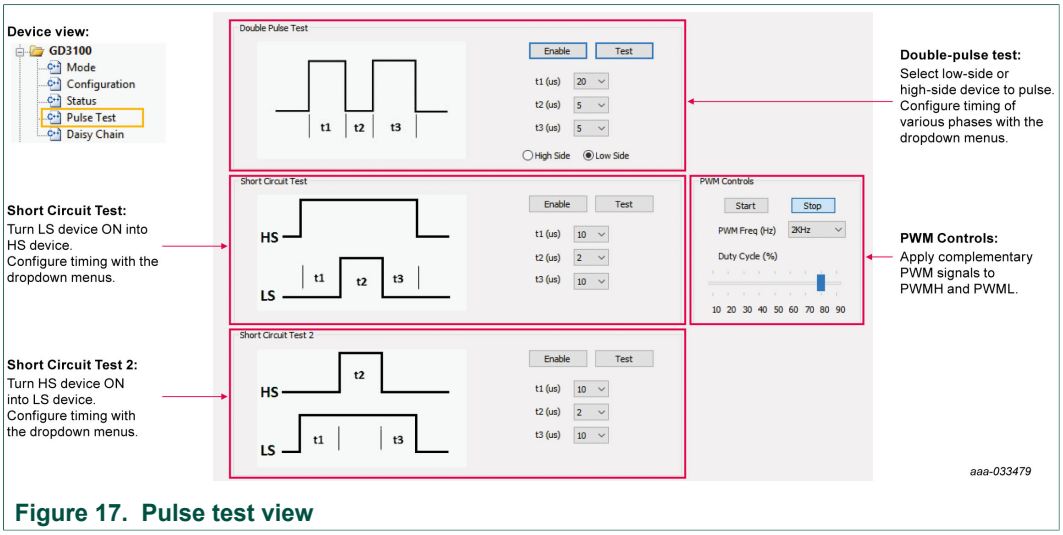

Figure 17. Pulse test view

5.3.5 Daisy chain

When FRDM-GD3100EVM Rev C is configured for daisy-chain (see Section 3.4.4.1 "SPI configuration options"), both GD3100 devices can be addressed in the same SPI frame. In daisy-chain configuration, both devices will be addressed by “SPI 0”. Neither device will be addressed if “SPI 1” is selected.

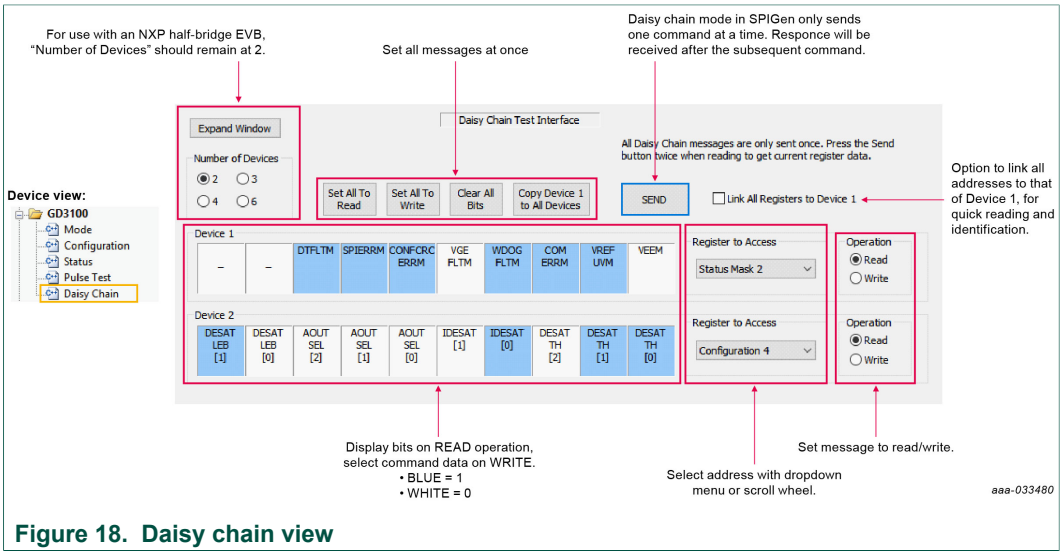

Figure 18. Daisy chain view

5.3.6 Single command

The Single command view contains a log of recent commands, displayed in hexadecimal format. Single SPI commands can be saved and recalled by name. Commands defined here are available for scripting in the Batch commands page. SPI words sent and received (initiated from any tab) are logged here in hexadecimal and can be saved and exported in a text file. Daisy-chain length command structure (n*24 bit length, where n > 1) are not supported by this view.

All information provided in this document is subject to legal disclaimers.

© NXP B.V. 2020. All rights reserved.

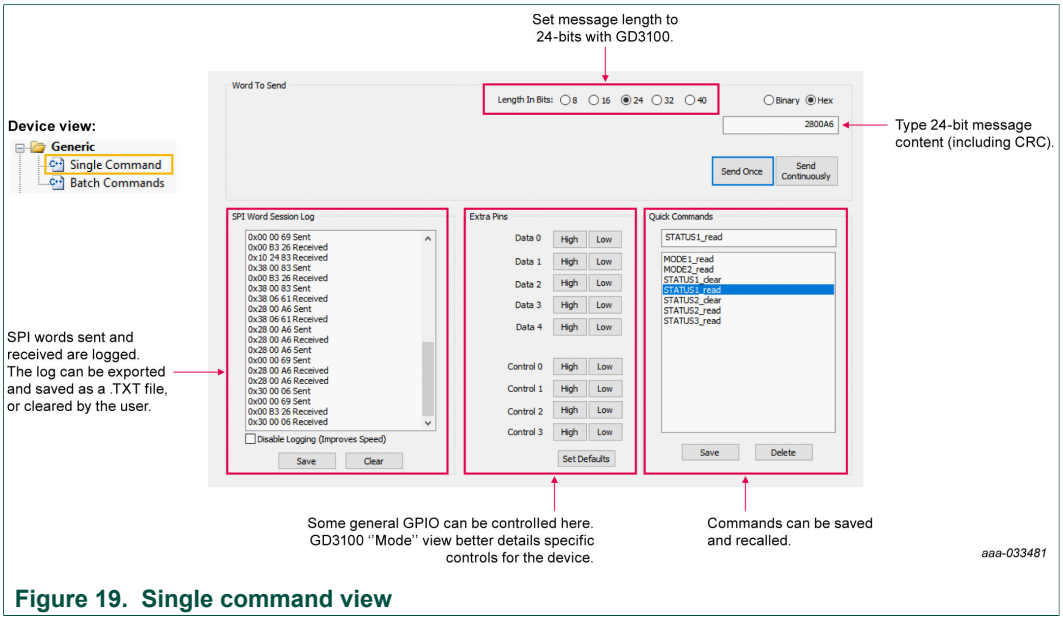

Figure 19. Single command view

5.3.7 Batch command

The Batch commands view allows creation of scripts containing commands defined by the Single command page. Batches can be named, saved, and recalled. This is useful for quickly initializing the device after powering up.

The batch commands sent can be logged and saved in a text file. The SPI words sent/ received can be viewed in hexadecimal and exported back in the Single commands view. Daisy-chain length command structure (n*24 bit length, where n > 1) are not supported by this view.

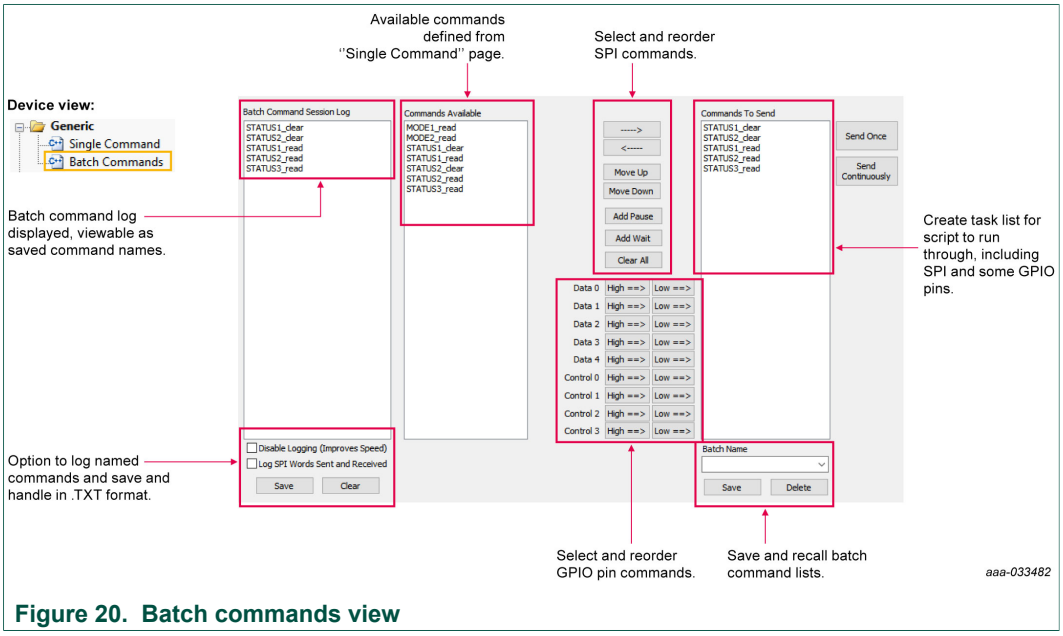

Figure 20. Batch commands view

All information provided in this document is subject to legal disclaimers.

© NXP B.V. 2020. All rights reserved.

5.4 Troubleshooting

Some common issues and troubleshooting procedures are detailed below. This is not an exhaustive list by any means, and additional debug may be needed:

Problem	Evaluation	Explanation	Corrective action(s)
No PWM output (no fault reported)	Check PWM jumper position on translator board	Incorrect PWM jumpers obstruct signal path but not report fault	Set PWMH (J235) and PWML (J236) jumpers properly, for desired control method: • KL25Z control configuration reviewed in Section 3.6.1 • External PWM control configuration reviewed in Section 3.6.2
	Check correct firmware is in use for translator board version	Firmware includes pin definitions and pinout for KL25Z corresponding to routing and pin allocation on specific translator board revision	Check firmware version in SPIGen, according to Figure 14. Match this to microcode needed for translator board revision, stated in Section 5.2, step 6.
	Check PWM control signal	Ensure that proper PWM signal is reaching GD3100	Monitor EXT_PWML (TP10) and EXT_PWMH (TP11) for commanded PWM state
	Check FSENB status (see GD3100 pin 15, STATUS3)	PWM is disabled when FSENB=L	Set pin FSENB=H (pin 15) to continue
	Check CONFIG_EN bit (MODE2)	PWM is disabled when CONFIG_ EN=1	Write CONFIG_EN=0 to continue
No PWM output (fault reported)	Check VGE fault (VGE_FLT)	A short on IGBT gate, or too low of VGEMON delay setting causes VGE fault, locking out PWM control of the gate.	Clear VGE_FLT bit (STATUS2) to continue. Increase VGEMON delay setting (CONFIG6). If safe operating condition can be guaranteed, set VGE_FLTM (MSK2) bit to 0, to mask fault.
	Check for short-circuit fault (SC) in STATUS1 register	SC is a severe fault that disables PWM. SC fault cannot be masked	Clear SC fault to continue. Consider adjusting SC fault settings on GD3100: • Adjust short-circuit threshold setting (CONFIG2) • Adjust short-circuit filter setting (CONFIG2)
PWM output is good, but with persistent fault reported	Check for dead time fault (DTFLT) in STATUS2 register	Dead time is enforced, but fault indicates that PWM controls signals are in violation	Clear DTFLT fault bit (STATUS2). Check PWMHSEL (J32) and PWMLSEL (J31) are configured to bypass dead time faults. Consider adjusting dead time settings on GD3100: • Change mandatory PWM dead time setting (CONFIG5) • Mask dead time fault (MSK2)
	Check for overcurrent (OC) fault in STATUS1 register	OC fault latches, but does not disable PWM. OC fault cannot be masked.	Clear OC fault bit (STATUS1). Adjust OC fault detection settings on GD3100: • Adjust overcurrent threshold setting (CONFIG1) • Adjust overcurrent filter setting (CONFIG1)
PWM or FSSTATE rising edge has longer delay than falling edge	Check translator output voltage vs. GD3100 VDD voltage	Low translator output voltage (compared with correct VDD at GD3100) causes the logic-high threshold at the GD3100 pin to be crossed later than commanded	Check translator output voltage selection (J233) is configured to the same level as the GD3100 VDD Check VCCSEL supply or translator outputs on the translator board for excessive loading or supply droop/ pulldown

All information provided in this document is subject to legal disclaimers.

© NXP B.V. 2020. All rights reserved.

Problem	Evaluation	Explanation	Corrective action(s)
WDOG_FLT reported on startup	Check VSUP and VCC are powered	On initialization, watchdog fault is reported when one die is powered up before the other	Check VSUP and VCC both have power applied. Clear WDOG_FLT bit (STATUS2) to continue.
SPIERR reported on startup	Check KL25Z/translator connection	On initialization, SPIERR can occur when the SPI bus is open, or when GD3100 IC is powered up before the translator (which provides CSB).	Clear SPIERR fault to continue. Reinitialize power to GD3100 after translator is powered (over USB).
SPIERR reported after SPI message	Check bit length of message sent	There is SPIERR if SCLK does not see a n*24 multiple of cycles	Use 24-bit message length for SPI messages
	Check CRC	SPIERR faults if CRC provided in sent message is not good	Use SPIGen to generate commands with valid CRC. The command can be copied in binary or hexadecimal and sent from another program.
	Check for sufficient dead time between SPI messages	SPIERR fault bit is set when the time between SPI messages (txfer_ delay) received is too short. Minimum required delay time is 19 µs.	Check time between CSB rising edge (old message end) and CSB falling edge (new message start) during normal SPI read, and ensure transfer delay dead time check. SPIERR can also be cleared in BIST.
VCCREGUV reported on startup	Check VCCREG potential	Usually caused by low VCC	Clear VCCREGUV fault bit (STATUS1). Tune VCC-GNDISO potential with power supply set resistor (R20).
VREFUV reported on startup	Check HV domain is powered correctly	Usually related to slow rise time of VCC supply on HV domain, or failed VREF regulator	Clear VREFUV bit (STATUS2). Reset HV domain supply if fault bit does not clear.
	Check VCC for undervoltage condition	Low VCC is visible indirectly through other HV domain faults	Tune VCC-GNDISO using R20 feedback
VCCOV fault reported on startup	Check position of VEEx_SEL (J1, J2) jumpers	VEEx_SEL jumpers set the VCC/VEE potential relative to each HV domain GND	Disable HV domain power supplies, and set correct VEExSEL jumpers. See Section 3.4.3.2 for details. Clear VCCOV bit (STATUS1) to continue.
	Check solder joint integrity of VEEx_ SEL (J1, J2) jumpers and other VEEx-GNDISOx components	VEEx_SEL jumper (J1, J2) short between 2-3, or low-impedance component failure can cause VCC-VEE potential to exceed VCCOV	Remove power. Check VEEx_SEL jumper integrity. Remove jumper and apply continuity check for 2-3 short. Check that Zener diode regulator is valid in diode check.
	Check VCC-GNDISO potential	PWM is disabled during a VCC overvoltage (20 V nom.)	Tune VCC-GNDISO potential to suitable level with power supply set resistor (R20). Clear VCCOV bit (STATUS1) to continue.
No PWM during short circuit test	Check PWMxSEL jumpers	Incorrect configuration of PWMALT pins prevent short-circuit test by enforcing dead time	For short-circuit test, set PWMLSEL (J31) and PWMHSEL (J32) to bypass dead time. See Section 3.4.4.2 for details.
Bad SPI data, appears to repeat previous response	Check VSUP/VDD for undervoltage condition	VDD_UV latches SPI buffer contents, preventing updated fault reporting	Check voltage provided at VDD pin (pin 3). On each read, compare the address from the sent command and response (a difference indicates that the SPI response is latched due to inactive). Read multiple addresses to ensure a good comparison.
	Check that VCC is enabled at PS_EN (J25) jumper	PS_EN can be enabled/disabled in hardware or software	Enable VCC/VEE from SPIGen. If using Rev B translator, set PS_EN (J25) to 2-3 to permanently enable the supply.
	Check VCC for undervoltage	Unpowered VCC prevents HV domain from updating data	Tune VCC-GNDISO using R20 feedback

All information provided in this document is subject to legal disclaimers.

© NXP B.V. 2020. All rights reserved.

6 Schematics, board layout and bill of materials

The board schematics, board layout and bill of materials are available at http://www.nxp.com/FRDM-GD3100EVM.

7 References

[1] Tool summary page for FRDM-GD3100EVM Rev C
http://www.nxp.com/FRDM-GD3100EVM

[2] Product summary page for MC33GD3100 device
http://www.nxp.com/GD3100

8 Revision history

Revision history

Revision	Date	Description
1	20180430	• Initial version
2	20180716	• Added Section 4.2
3	20180816	• Updated firmware install notes and changed firmware version to 5.4.5 in Section 5.2
4	20190717	• Updated to current NXP format • References to the board changed throughout to match revision C of the FRDM-GD3100EVM
5	20200210	• Figure 18: updated description • Section 5.2: added instruction for firmware selection • Section 5.3.4: added detail on PWM duty cycle • Section 5.4: added additional troubleshooting items

All information provided in this document is subject to legal disclaimers.

© NXP B.V. 2020. All rights reserved.

9 Legal information

9.1 Definitions

Draft — The document is a draft version only. The content is still under internal review and subject to formal approval, which may result in modifications or additions. NXP Semiconductors does not give any representations or warranties as to the accuracy or completeness of information included herein and shall have no liability for the consequences of use of such information.

9.2 Disclaimers

Limited warranty and liability — Information in this document is believed to be accurate and reliable. However, NXP Semiconductors does not give any representations or warranties, expressed or implied, as to the accuracy or completeness of such information and shall have no liability for the consequences of use of such information. NXP Semiconductors takes no responsibility for the content in this document if provided by an information source outside of NXP Semiconductors. In no event shall NXP Semiconductors be liable for any indirect, incidental, punitive, special or consequential damages (including - without limitation - lost profits, lost savings, business interruption, costs related to the removal or replacement of any products or rework charges) whether or not such damages are based on tort (including negligence), warranty, breach of contract or any other legal theory. Notwithstanding any damages that customer might incur for any reason whatsoever, NXP Semiconductors' aggregate and cumulative liability towards customer for the products described herein shall be limited in accordance with the Terms and conditions of commercial sale of NXP Semiconductors.

Right to make changes — NXP Semiconductors reserves the right to make changes to information published in this document, including without limitation specifications and product descriptions, at any time and without notice. This document supersedes and replaces all information supplied prior to the publication hereof.

Suitability for use — NXP Semiconductors products are not designed, authorized or warranted to be suitable for use in life support, life-critical or safety-critical systems or equipment, nor in applications where failure or malfunction of an NXP Semiconductors product can reasonably be expected to result in personal injury, death or severe property or environmental damage. NXP Semiconductors and its suppliers accept no liability for inclusion and/or use of NXP Semiconductors products in such equipment or applications and therefore such inclusion and/or use is at the customer's own risk.

Applications — Applications that are described herein for any of these products are for illustrative purposes only. NXP Semiconductors makes no representation or warranty that such applications will be suitable for the specified use without further testing or modification. Customers are responsible for the design and operation of their applications and products using NXP Semiconductors products, and NXP Semiconductors accepts no liability for any assistance with applications or customer product design. It is customer's sole responsibility to determine whether the NXP Semiconductors product is suitable and fit for the customer's applications and products planned, as well as for the planned application and use of customer's third party customer(s). Customers should provide appropriate design and operating safeguards to minimize the risks associated with their applications and products. NXP Semiconductors does not accept any liability related to any default, damage, costs or problem which is based on any weakness or default in the customer's applications or products, or the application or use by customer's third party customer(s). Customer is responsible for doing all necessary testing for the customer's applications and products using NXP Semiconductors products in order to avoid a default of the applications and the products or of the application or use by customer's third party customer(s). NXP does not accept any liability in this respect.

Suitability for use in automotive applications — This NXP Semiconductors product has been qualified for use in automotive applications. Unless otherwise agreed in writing, the product is not designed, authorized or warranted to be suitable for use in life support, life-critical or safety-critical systems or equipment, nor in applications where failure or malfunction of an NXP Semiconductors product can reasonably be expected to result in personal injury, death or severe property or environmental damage. NXP Semiconductors and its suppliers accept no liability for inclusion and/or use of NXP Semiconductors products in such equipment or applications and therefore such inclusion and/or use is at the customer's own risk.

Export control — This document as well as the item(s) described herein may be subject to export control regulations. Export might require a prior authorization from competent authorities.

Evaluation products — This product is provided on an "as is" and "with all faults" basis for evaluation purposes only. NXP Semiconductors, its affiliates and their suppliers expressly disclaim all warranties, whether express, implied or statutory, including but not limited to the implied warranties of non-infringement, merchantability and fitness for a particular purpose. The entire risk as to the quality, or arising out of the use or performance, of this product remains with customer. In no event shall NXP Semiconductors, its affiliates or their suppliers be liable to customer for any special, indirect, consequential, punitive or incidental damages (including without limitation damages for loss of business, business interruption, loss of use, loss of data or information, and the like) arising out the use of or inability to use the product, whether or not based on tort (including negligence), strict liability, breach of contract, breach of warranty or any other theory, even if advised of the possibility of such damages. Notwithstanding any damages that customer might incur for any reason whatsoever (including without limitation, all damages referenced above and all direct or general damages), the entire liability of NXP Semiconductors, its affiliates and their suppliers and customer's exclusive remedy for all of the foregoing shall be limited to actual damages incurred by customer based on reasonable reliance up to the greater of the amount actually paid by customer for the product or five dollars (US$5.00). The foregoing limitations, exclusions and disclaimers shall apply to the maximum extent permitted by applicable law, even if any remedy fails of its essential purpose.

Translations — A non-English (translated) version of a document is for reference only. The English version shall prevail in case of any discrepancy between the translated and English versions.

9.3 Trademarks

Notice: All referenced brands, product names, service names and trademarks are the property of their respective owners.

NXP — is a trademark of NXP B.V.

SafeAssure — is a trademark of NXP B.V.

All information provided in this document is subject to legal disclaimers.

© NXP B.V. 2020. All rights reserved.

Tables

Tab. 1. Device features 4
Tab. 2. Low-voltage (LV) domain 24-pin connector definitions 5
Tab. 3. Driver board test point definitions 7
Tab. 4. Power related jumper definitions 9
Tab. 5. Signal related jumper configurations 11
Tab. 6. Interrupt LED definitions 15
Tab. 7. Translator board jumper functionality 16
Tab. 8. Translator board test point definition 16

Figures

Fig. 1. Assembled GD3100 half-bridge EVB, FRDM-KL25Z and translator board 4
Fig. 2. Evaluation board voltage and interface domains 5
Fig. 3. Key test point locations 7
Fig. 4. Power supply and jumpers configuration 9
Fig. 5. Signal related jumper locations 11
Fig. 6. GD3100 evaluation board bottom view 13
Fig. 7. Gate drive resistors 14
Fig. 8. LED interrupt indicators 14
Fig. 9. Freedom Development Platform 15
Fig. 10. Logic translator board 16
Fig. 11. Evaluation board and system setup 18
Fig. 12. FRDM-KL25Z setup and interface 20
Fig. 13. SPIGen general view 22
Fig. 14. Mode registers and GPIO controls view 23
Fig. 15. Configuration registers view 23
Fig. 16. Status, mask, and REQADC registers view 24
Fig. 17. Pulse test view 25
Fig. 18. Daisy chain view 25
Fig. 19. Single command view 26
Fig. 20. Batch commands view 26

All information provided in this document is subject to legal disclaimers.

© NXP B.V. 2020. All rights reserved.

Contents

1 Finding kit resources and information on the NXP web site 2
1.1 Collaborate in the NXP Community 2
2 Getting started 2
2.1 Kit contents 2
2.2 Additional hardware 2
2.3 Windows PC workstation 3
2.4 Software 3
3 Getting to know the hardware 3
3.1 Overview 3
3.2 Board features 3
3.3 Device features 4
3.4 Board description 4
3.4.1 Low-voltage logic and controls connector 5
3.4.2 Test point definitions 6
3.4.3 Power related jumpers configuration 9
3.4.3.1 Configuring power delivery to GD3100 10
3.4.3.2 Configuring VEE for gate drive (GL) 10
3.4.3.3 Configuring VCC for gate drive (GH) 10
3.4.4 Signal related jumpers and configuration 11
3.4.4.1 SPI configuration options 12
3.4.4.2 Configuring dead time application in hardware 13
3.4.4.3 Setting method of power supply control (VCCx, VEEx) 13
3.4.5 Bottom view 13
3.4.6 Gate drive resistors 13
3.4.7 LED interrupt indicators 14
3.5 Kinetis KL25Z freedom board 15
3.6 Logic translator board 15
3.6.1 Configuring the translator for KL25Z-controlled PWM 17
3.6.2 Configuring the translator for external PWM control 17
3.6.3 Configuring the translator for 5.0 V logic operation 17
3.6.4 Configuring the translator for 3.3 V logic operation 17
4 Configuring the hardware 18
4.1 System setup 18
4.2 Quick start 19
4.2.1 Scope and purpose 19
4.2.2 Intended audience 19
4.2.3 Setting up and connecting the evaluation kit 19
5 Installation and use of software tools 20
5.1 Installing SPIGen on your computer 20
5.2 Configuring the FRDM-KL25Z microcode 21
5.3 Using the SPIGEN graphical user interface 22
5.3.1 Mode registers 22
5.3.2 Configuration register 23
5.3.3 Status and mask register 24
5.3.4 Pulse test 24
5.3.5 Daisy chain 25
5.3.6 Single command 25
5.3.7 Batch command 26
5.4 Troubleshooting 27
6 Schematics, board layout and bill of materials 29
7 References 29
8 Revision history 29
9 Legal information 30

Please be aware that important notices concerning this document and the product(s) described herein, have been included in section 'Legal information'.

© NXP B.V. 2020. All rights reserved.

For more information, please visit: http://www.nxp.com
For sales office addresses, please send an email to: salesaddresses@nxp.com

Date of release: 10 February 2020
Document identifier: UM11108