23V, 2A/2.5A, 340KHz Synchronous Step-Down DC/DC Converter

Description

The FR9886D is a synchronous step-down DC/DC converter that provides wide 4.5V to 23V input voltage range. There are two packages (SOP-8 & SOP-8(EP)) to support 2A/2.5A continuous output current.

The FR9886D fault protection includes cycle-by-cycle current limit, input UVLO, output over voltage protection and thermal shutdown. Besides, adjustable soft-start function prevents inrush current at turn-on. This device uses current mode control scheme which provides fast transient response. Internal Compensation function reduces external compensation components and simplifies the design process. In shutdown mode, the supply current is less than 1μA.

The FR9886D is available in SOP-8/SOP-8 (Exposed Pad) packages. It is RoHS compliant and 100% lead (Pb) free.

Features

- High Efficiency Synchronous Buck Converter with Low I_{SD}(<1μA)
- Low Rds(on) Integrated Power MOSFET
- Internal Compensation Function
- Wide Input Voltage Range: 4.5V to 23V
- Adjustable Output Voltage from 0.925V to 20V
- 2A Output Current (Package: SOP-8)
- 2.5A Output Current (Package: SOP-8(EP))
- Fixed 340KHz Switching Frequency
- Current Mode Operation
- Adjustable Soft-Start
- Cycle-by-Cycle Current Limit
- Input Under Voltage Lockout
- Over-Temperature Protection with Auto Recovery
- SOP-8 and SOP-8 Exposed Pad Packages

Applications

- STB (Set-Top-Box)
- LCD Display, TV
- Distributed Power System
- Networking, XDSL Modem

Pin Assignments

SO Package (SOP-8)

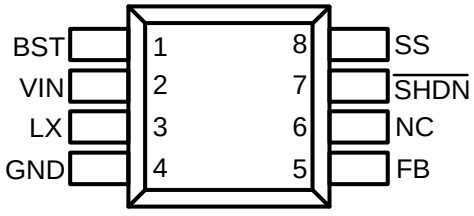

SP Package (SOP-8 Exposed Pad)

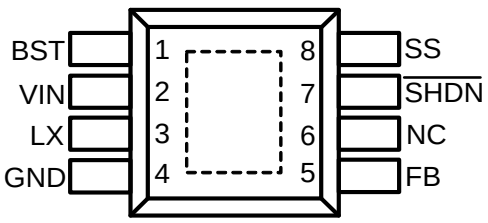

Figure 1. Pin Assignments of FR9886D

Ordering Information

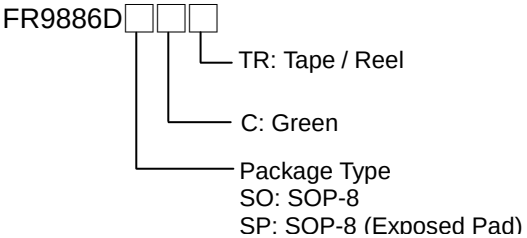

Typical Application Circuit

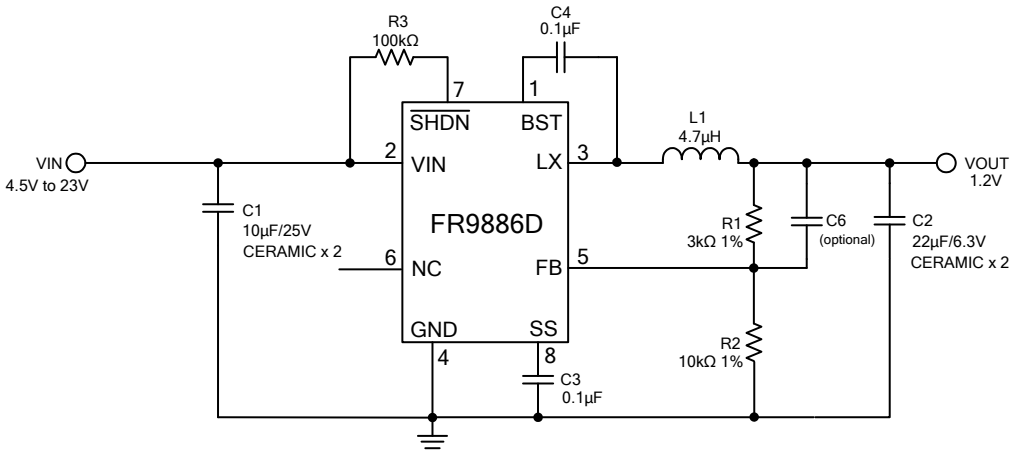

Figure 2. C_{IN} /C_{OUT} use Ceramic Capacitors Application Circuit

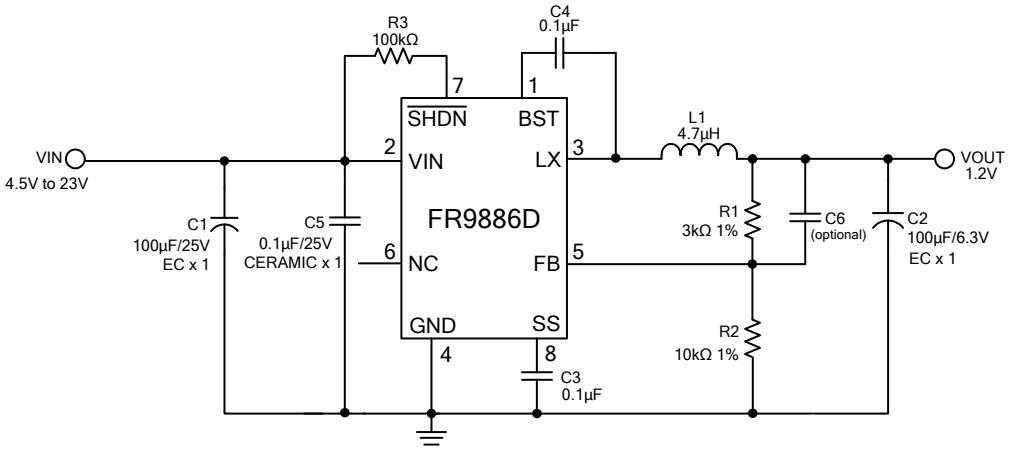

Figure 3. C_{IN} /C_{OUT} use Electrolytic Capacitors Application Circuit

V_{OUT}	R1	R2	C6	L1	C2
1.2V	3kΩ	10kΩ	10pF~1nF	4.7µH	22µF MLCC x2
1.8V	9.53kΩ	10kΩ	10pF~1nF	4.7µH	22µF MLCC x2
2.5V	16.9kΩ	10kΩ	10pF~1nF	10µH	22µF MLCC x2
3.3V	26.1kΩ	10kΩ	10pF~1nF	10µH	22µF MLCC x2
5V	44.2kΩ	10kΩ	10pF~1nF	10µH	22µF MLCC x2
1.2V	3kΩ	10kΩ	--	4.7µH	100µF EC x1
1.8V	9.53kΩ	10kΩ	--	4.7µH	100µF EC x1
2.5V	16.9kΩ	10kΩ	--	10µH	100µF EC x1
3.3V	26.1kΩ	10kΩ	--	10µH	100µF EC x1
5V	44.2kΩ	10kΩ	--	10µH	100µF EC x1

Table 1. Recommended Component Values

Functional Pin Description

I/O	Pin Name	Pin No.	Pin Function
I	FB	5	Voltage Feedback Input Pin. Connect FB and VOUT with a resistive voltage divider. This IC senses feedback voltage via FB and regulates it at 0.925V.
I	VIN	2	Power Supply Input Pin. Drive this pin by 4.5V to 23V voltage to power on the chip.
I	$\overline{\text{SHDN}}$	7	Enable Input Pin. This pin provides a digital control to turn the converter on or off. Connect VIN with a 100KΩ resistor for self-startup.
I	GND	4	Ground Pin. Connect this pin to exposed pad.
O	LX	3	Power Switching Output. It is the output pin of internal high side NMOS which is the switching to supply power.
O	SS	8	Soft-Start Pin. This pin controls the soft-start period. Connect a capacitor from SS to GND to set the soft start period.
O	BST	1	High Side Gate Drive Boost Pin. A 10nF or greater capacitor must be connected from this pin to LX. It can boost the gate drive to fully turn on the internal high side NMOS.
O	NC	6	No connection.

Block Diagram

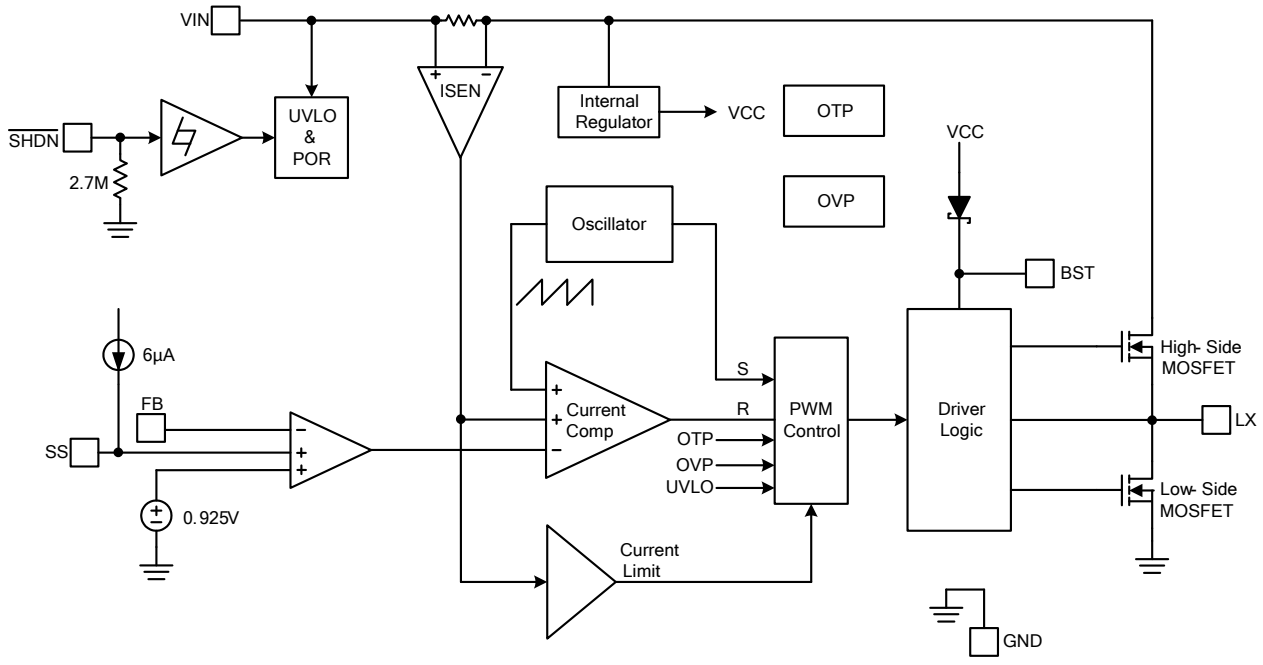

Figure 4. Block Diagram of FR9886D

Absolute Maximum Ratings (Note1)

- Supply Voltage V_{IN} ---------- -0.3V to +25V
- Enable Voltage $V_{\overline{SHDN}}$ ---------- -0.3V to +25V
- LX Voltage V_{LX} (50ns) ---------- -1V to V_{IN}+0.3V
- BST Voltage V_{BST} ---------- V_{LX}-0.3V to V_{LX}+6V
- All Other Pins Voltage ---------- -0.3V to +6V
- Maximum Junction Temperature (T_J) ---------- +150°C
- Storage Temperature (T_S) ---------- -65°C to +150°C
- Lead Temperature (Soldering, 10sec.) ---------- +260°C
- Power Dissipation @T_A=25°C, (P_D) (Note2)
  - SOP-8 ---------- 1.39W
  - SOP-8 (Exposed Pad) ---------- 2.08W
- Package Thermal Resistance, (θ_{JA}):
  - SOP-8 ---------- 90°C/W
  - SOP-8 (Exposed Pad) ---------- 60°C/W
- Package Thermal Resistance, (θ_{JC}):
  - SOP-8 ---------- 39°C/W
  - SOP-8 (Exposed Pad) ---------- 15°C/W

Note 1：Stresses beyond this listed under “Absolute Maximum Ratings" may cause permanent damage to the device.
Note 2：PCB heat sink copper area = 10mm^2.

Recommended Operating Conditions

- Supply Voltage V_{IN} ---------- +4.5V to +23V
- Enable Voltage $V_{\overline{SHDN}}$ ---------- 0V to V_{IN}
- Operation Temperature Range ---------- -40°C to +85°C

Electrical Characteristics

(V_{IN}=12V, T_A=25°C, unless otherwise specified.)

Parameter	Symbol	Conditions		Min	Typ	Max	Unit
V_{IN} Input Supply Voltage	V_{IN}			4.5		23	V
V_{IN} Quiescent Current	I_{DDQ}	$V_{\overline{SHDN}}$=1.8V, V_{FB}=1.0V			2		mA
V_{IN} Shutdown Supply Current	I_{SD}	$V_{\overline{SHDN}}$=0V				1	μA
Feedback Voltage	V_{FB}	4.5V≦V_{IN}≦23V		0.9	0.925	0.95	V
Feedback OVP Threshold Voltage	V_{OVP}				1.5		V
High-Side MOSFET R_{DS}(ON) (Note3)	$R_{DS(ON)}$		SOP-8		130		mΩ
			SOP-8(EP)		120		
Low-Side MOSFET R_{DS}(ON) (Note3)	$R_{DS(ON)}$				110		mΩ
High-Side MOSFET Leakage Current	$I_{LX(leak)}$	$V_{\overline{SHDN}}$=0V, V_{LX}=0V				10	μA
High-Side MOSFET Current Limit (Note3)	$I_{LIMIT(HS)}$	Minimum Duty	SOP-8	2.8	4		A
			SOP-8(EP)	3.1	4.5		
Low-Side MOSFET Current Limit (Note3)	$I_{LIMIT(LS)}$	From Drain to Source			1.5		A
Error Amplifier Voltage Gain (Note3)					400		V/V
Oscillation frequency	F_{OSC}			290	340	420	KHz
Short Circuit Oscillation Frequency	$F_{OSC(short)}$	V_{FB}=0V			110		KHz
Maximum Duty Cycle	D_{MAX}	V_{FB}=0.8V			90		%
Minimum On Time (Note3)	T_{MIN}				100		ns
Input UVLO Threshold	$V_{UVLO(Vth)}$	V_{IN} Rising			4.3		V
Under Voltage Lockout Threshold Hysteresis	$V_{UVLO(HYS)}$				250		mV
Soft-Start Current	I_{SS}	V_{SS}=0V			6		μA
Soft-Start Period	T_{SS}	C_{SS}=0.1μF			15		ms
$\overline{SHDN}$ Input Low Voltage	$V_{\overline{SHDN}}$ (L)					0.4	V
$\overline{SHDN}$ Input High Voltage	$V_{\overline{SHDN}}$ (H)			2			V
$\overline{SHDN}$ Input Current	$I_{\overline{SHDN}}$	$V_{\overline{SHDN}}$=2V			0.75		μA
Thermal Shutdown Threshold (Note3)	T_{SD}				170		°C

Note 3：Not production tested.

Typical Performance Curves

V_{IN} = 12V, V_{OUT} = 3.3V, C1 = 10µF x 2, C2 = 22µF x 2, L1 = 10µH, TA = +25°C, unless otherwise noted.

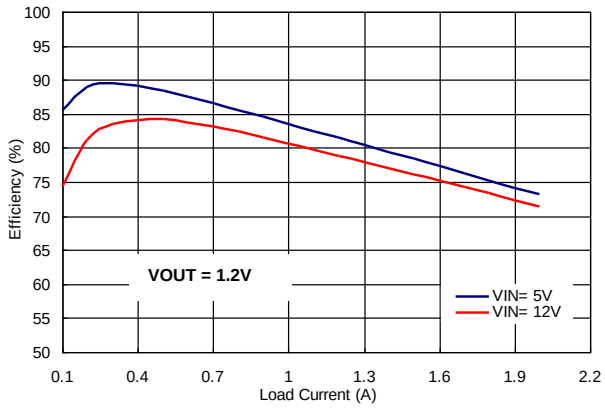

Figure 5. Efficiency vs. Loading (SOP-8)

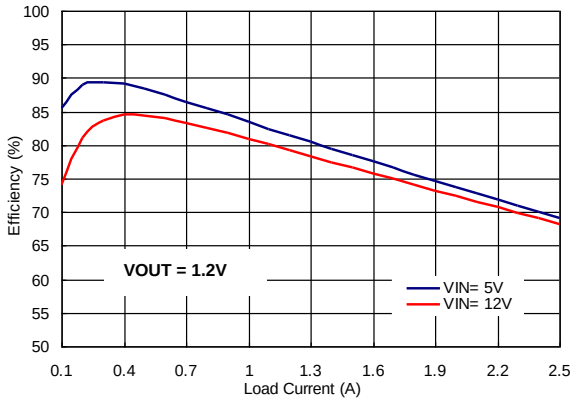

Figure 6. Efficiency vs. Loading (SOP-8 Exposed Pad)

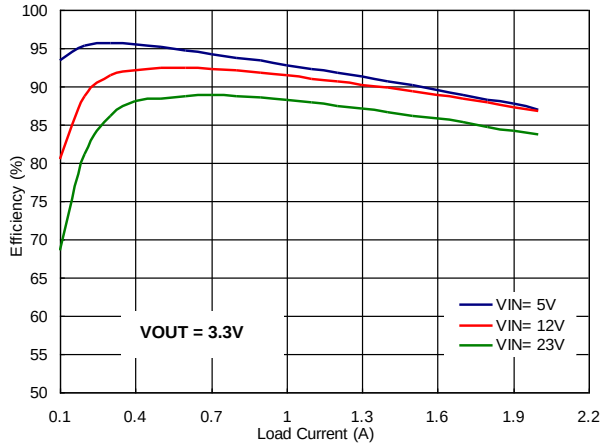

Figure 7. Efficiency vs. Loading (SOP-8)

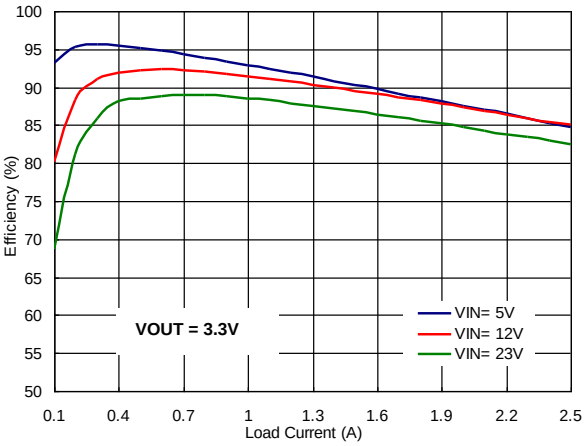

Figure 8. Efficiency vs. Loading (SOP-8 Exposed Pad)

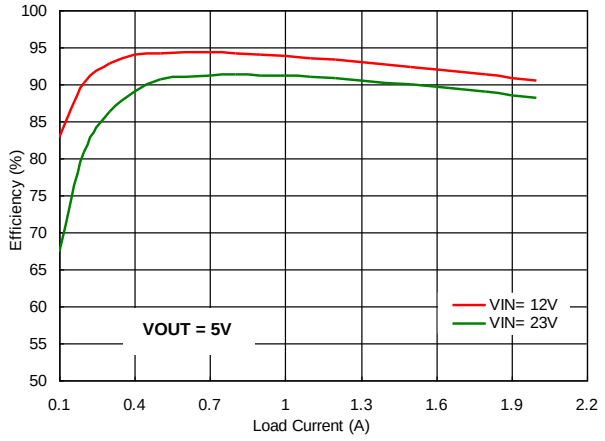

Figure 9. Efficiency vs. Loading (SOP-8)

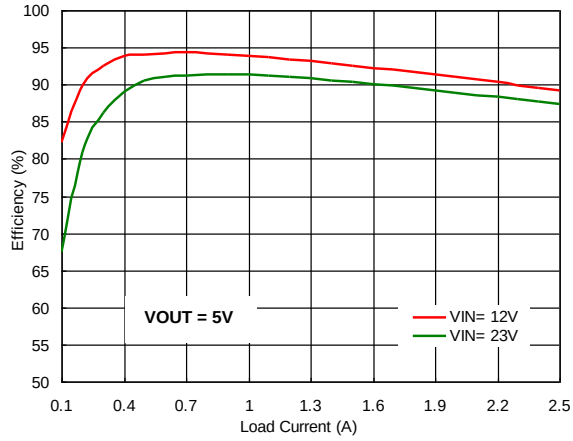

Figure 10. Efficiency vs. Loading (SOP-8 Exposed Pad)

Typical Performance Curves (Continued)

V_{IN} = 12V, V_{OUT} = 3.3V, C1 = 10µF x 2, C2 = 22µF x 2, L1 = 10µH, TA = +25°C, unless otherwise noted.

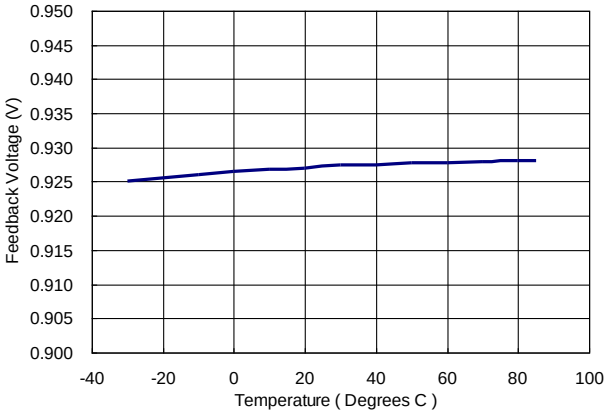

Figure 11. Feedback Voltage vs. Temperature

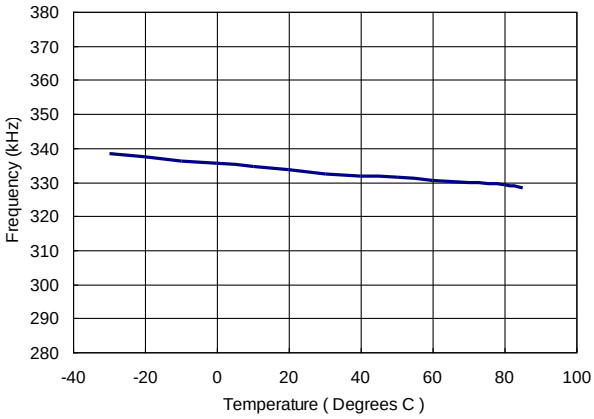

Figure 12. Frequency vs. Temperature

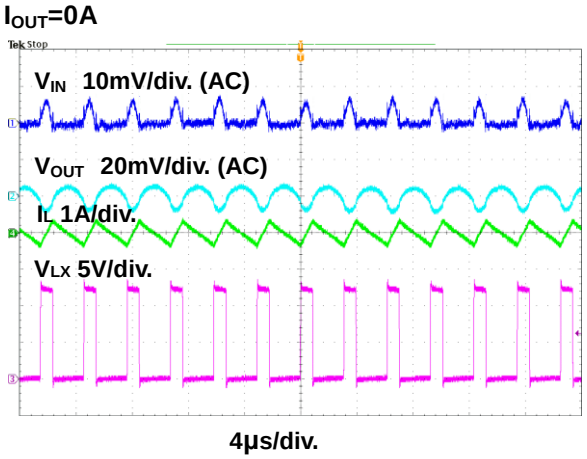

Figure 13. DC Ripple Waveform

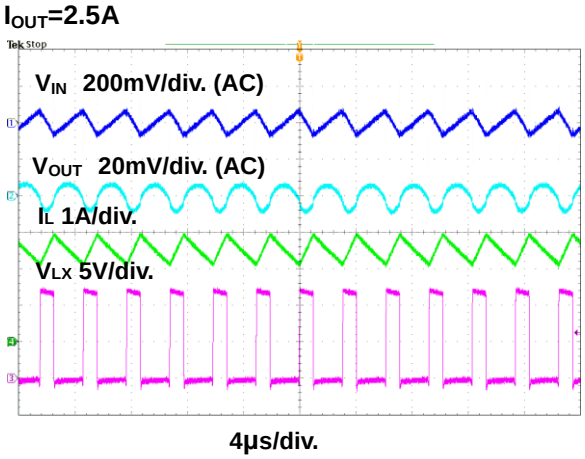

Figure 14. DC Ripple Waveform

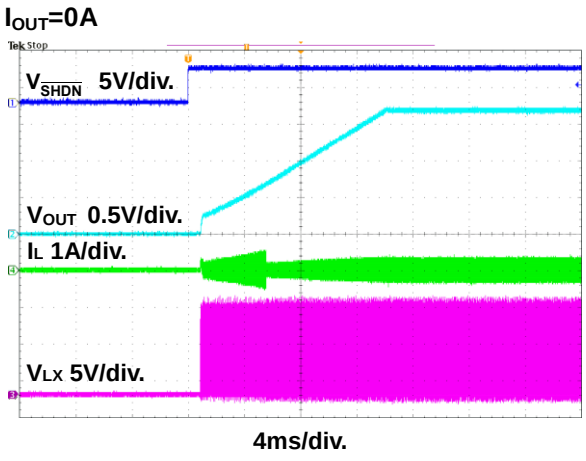

Figure 15. Startup Through $\overline{SHDN}$ Waveform

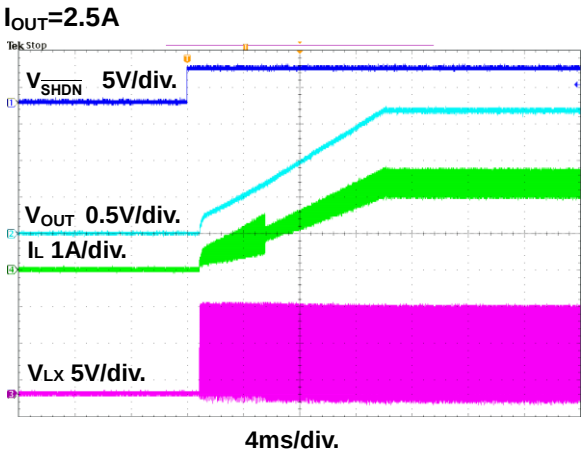

Figure 16. Startup Through $\overline{SHDN}$ Waveform

Typical Performance Curves (Continued)

V_{IN} = 12V, V_{OUT} = 3.3V, C1 = 10µF x 2, C2 = 22µF x 2, L1 = 10µH, TA = +25°C, unless otherwise noted.

I_{OUT}=0A

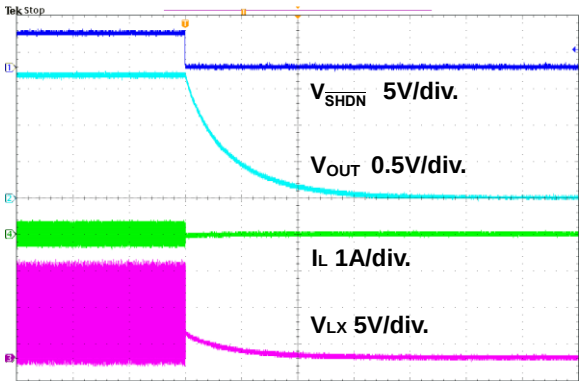

Figure 17. Shutdown Through $\overline{SHDN}$ Waveform

I_{OUT}=2.5A

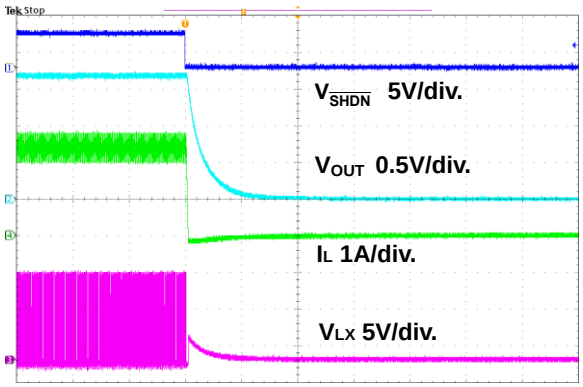

Figure 18. Shutdown Through $\overline{SHDN}$ Waveform

I_{OUT}=100mA to 2.5A step

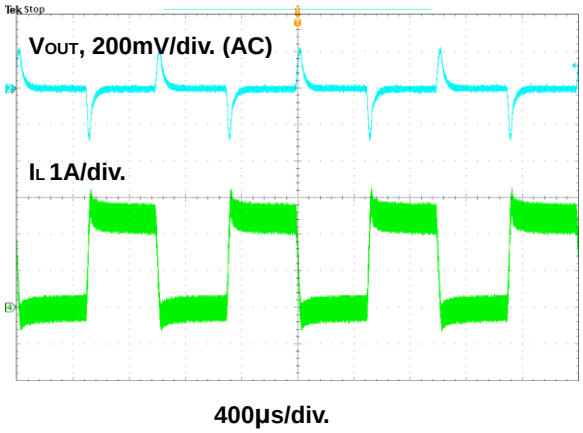

Figure 19. Load Transient Waveform

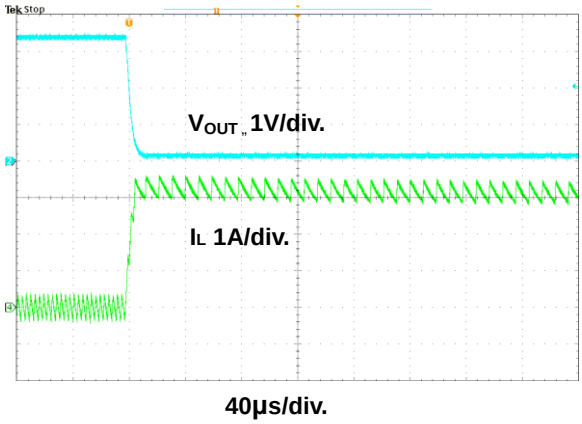

Figure 20. Short Circuit Test

Function Description

The FR9886D is a high efficiency, internal compensation and constant frequency current mode synchronous step-down DC/DC converter. There are two packages (SOP-8 & SOP-8(EP)) to support 2A/2.5A continuous output current. It regulates input voltage from 4.5V to 23V and down to output voltage as low as 0.925V.

Control Loop

Under normal operation, the output voltage is sensed by FB pin through a resistive voltage divider and amplified through the error amplifier. The voltage of error amplifier output is compared to the switch current to control the RS latch. At the beginning of each clock cycle, the high-side NMOS turns on when the oscillator sets the RS latch, and turns off when current comparator resets the RS latch. Then the low-side NMOS will turn on until the clock period ends.

Enable

The FR9886D $\overline{\text{SHDN}}$ pin provides digital control to turn on/off the regulator. When the voltage of $\overline{\text{SHDN}}$ exceeds the threshold voltage, the regulator will start the soft start function. If the $\overline{\text{SHDN}}$ pin voltage is below the shutdown threshold voltage, the regulator will turn into the shutdown mode and the shutdown current will be smaller than 1μA. For auto start-up operation, connect $\overline{\text{SHDN}}$ to VIN through a 100KΩ resistor.

Soft Start

The FR9886D employs adjustable soft start function to reduce input inrush current during start up. When the device turns on, a 6μA current will begin to charge the capacitor which is connected from SS pin to GND. The equation for the soft start time is shown as below:

$$T_{SS}(ms)=\frac{C_{SS}(nF)\times V_{FB}}{I_{SS}(\mu A)}$$

The V_{FB} voltage is 0.925V and the I_{SS} current is 6μA. If a 0.1μF capacitor is connected from SS pin to GND, the soft start time will be 15ms.

Output Over Voltage Protection

When the FB pin voltage exceeds 1.5V, the output over voltage protection function will be triggered and turn off the high-side/low-side MOSFET.

Input Under Voltage Lockout

When the FR9886D is power on, the internal circuits will be held inactive until V_{IN} voltage exceeds the input UVLO threshold voltage. And the regulator will be disabled when V_{IN} is below the input UVLO threshold voltage. The hysteretic of the UVLO comparator is 250mV (typ).

Short Circuit Protection

The FR9886D provides short circuit protection function to prevent the device damaged from short condition. When the short condition occurs and the feedback voltage drops lower than 0.4V, the oscillator frequency will be reduced to 110KHz to prevent the inductor current increasing beyond the current limit. In the meantime, the current limit will also be reduced to lower the short current. Once the short condition is removed, the frequency and current limit will return to normal.

Over Current Protection

The FR9886D over current protection function is implemented using cycle-by-cycle current limit architecture. The inductor current is monitored by measuring the high-side MOSFET series sense resistor voltage. When the load current increases, the inductor current will also increase. When the peak inductor current reaches the current limit threshold, the output voltage will start to drop. When the over current condition is removed, the output voltage will return to the regulated value.

Over Temperature Protection

The FR9886D incorporates an over temperature protection circuit to protect itself from overheating. When the junction temperature exceeds the thermal shutdown threshold temperature, the regulator will be shutdown. And the hysteretic of the over temperature protection is 60°C (typ).

Internal Compensation Function

The stability of the feedback circuit is controlled by internal compensation circuits. This internal compensation function is optimized for most applications, and this function can reduce external R, C components.

Application Information

Output Voltage Setting

The output voltage V_{OUT} is set by using a resistive divider from the output to FB. The FB pin regulated voltage is 0.925V. Thus the output voltage is:

$$V_{OUT}=0.925V\times\left(1+\frac{R1}{R2}\right)$$

Table 2 lists recommended values of R1 and R2 for most used output voltage.

Table 2 Recommended Resistance Values

V_{OUT}	R1	R2
5V	44.2kΩ	10kΩ
3.3V	26.1kΩ	10kΩ
2.5V	16.9kΩ	10kΩ
1.8V	9.53kΩ	10kΩ
1.2V	3kΩ	10kΩ

Place resistors R1 and R2 close to FB pin to prevent stray pickup.

Input Capacitor Selection

The use of the input capacitor is filtering the input voltage ripple and the MOSFETS switching spike voltage. Because the input current to the step-down converter is discontinuous, the input capacitor is required to supply the current to the converter to keep the DC input voltage. The capacitor voltage rating should be 1.25 to 1.5 times greater than the maximum input voltage. The input capacitor ripple current RMS value is calculated as:

$$I_{IN(RMS)}=I_{OUT}\times\sqrt{D\times(1-D)}$$

$$D=\frac{V_{OUT}}{V_{IN}}$$

Where D is the duty cycle of the power MOSFET.

This function reaches the maximum value at D=0.5 and the equivalent RMS current is equal to $I_{OUT}/2$. The following diagram is the graphical representation of above equation.

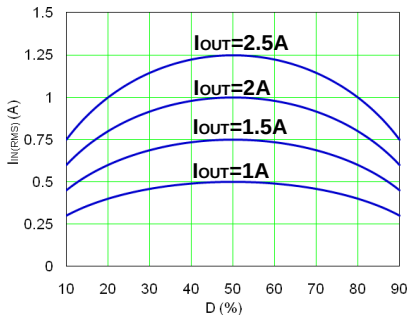

A low ESR capacitor is required to keep the noise minimum. Ceramic capacitors are better, but tantalum or low ESR electrolytic capacitors may also suffice. When using tantalum or electrolytic capacitors, a 0.1μF ceramic capacitor should be placed as close to the IC as possible.

Output Capacitor Selection

The output capacitor is used to keep the DC output voltage and supply the load transient current. When operating in constant current mode, the output ripple is determined by four components:

$$V_{RIPPLE}(t)=V_{RIPPLE(C)}(t)+V_{RIPPLE(ESR)}(t)+V_{RIPPLE(ESL)}(t)+V_{NOISE}(t)$$

The following figures show the form of the ripple contributions.

$V_{RIPPLE(ESR)}(t)$

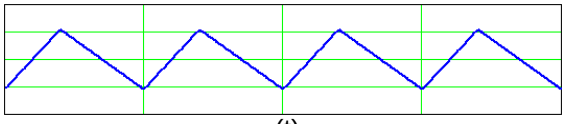

(t)

+

$V_{RIPPLE(ESL)}$ (t)

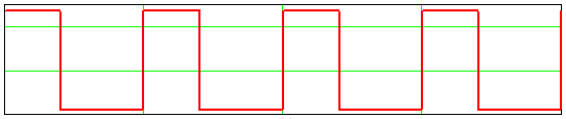

+ (t)

$V_{RIPPLE(C)}$ (t)

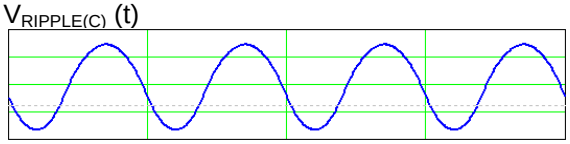

(t)

+

V_{NOISE} (t)

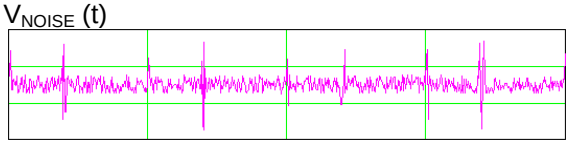

=

$V_{RIPPLE}(t)$

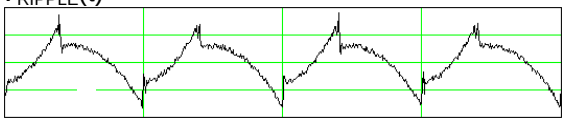

(t)

Application Information

$$V_{RIPPLE(ESR,\ p\text{-}p)}=\frac{V_{OUT}}{F_{OSC}\times L}\times\left(1-\frac{V_{OUT}}{V_{IN}}\right)\times ESR$$

$$V_{RIPPLE(ESL,\ p\text{-}p)}=\frac{ESL}{L+ESL}\times V_{IN}$$

$$V_{RIPPLE(C,\ p\text{-}p)}=\frac{V_{OUT}}{8\times F_{OSC}^2\times L\times C_{OUT}}\times\left(1-\frac{V_{OUT}}{V_{IN}}\right)$$

Where F_{OSC} is the switching frequency, L is the inductance value, V_{IN} is the input voltage, ESR is the equivalent series resistance value of the output capacitor, ESL is the equivalent series inductance value of the output capacitor and the C_{OUT} is the output capacitor.

Low ESR capacitors are preferred to use. Ceramic, tantalum or low ESR electrolytic capacitors can be used depending on the output ripple requirement. When using the ceramic capacitors, the ESL component is usually negligible.

It is important to use the proper method to eliminate high frequency noise when measuring the output ripple. The figure shows how to locate the probe across the capacitor when measuring output ripple. Removing the scope probe plastic jacket in order to expose the ground at the tip of the probe. It gives a very short connection from the probe ground to the capacitor and eliminating noise.

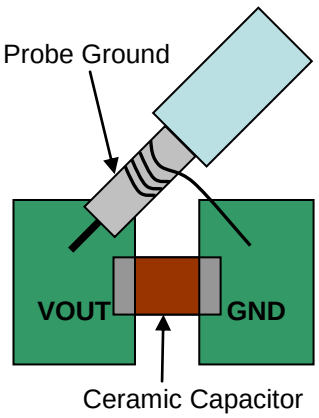

Inductor Selection

The output inductor is used for storing energy and filtering output ripple current. But the trade-off condition often happens between maximum energy storage and the physical size of the inductor. The first consideration for selecting the output inductor is to make sure that the inductance is large enough to keep the converter in the continuous current mode.

That will lower ripple current and result in lower output ripple voltage. The ΔI_L is inductor peak-to-peak ripple current:

$$\Delta I_L=\frac{V_{OUT}}{F_{OSC}\times L}\times\left(1-\frac{V_{OUT}}{V_{IN}}\right)$$

The following diagram is an example to graphically represent ΔI_L equation.

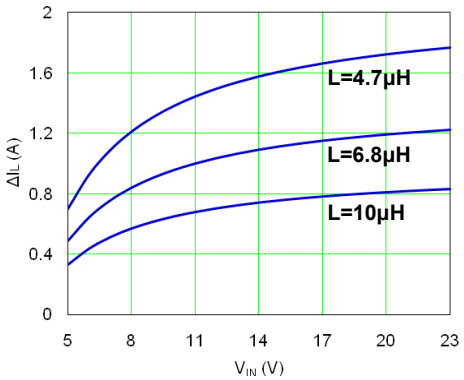

V_{OUT}=3.3V, F_{OSC}=340KHz

A good compromise value between size and efficiency is to set the peak-to-peak inductor ripple current ΔI_L equal to 30% of the maximum load current. But setting the peak-to-peak inductor ripple current ΔI_L between 20%~50% of the maximum load current is also acceptable. Then the inductance can be calculated with the following equation:

$$\Delta I_L=0.3\times I_{OUT(MAX)}$$

$$L=\frac{(V_{IN}-V_{OUT})\times V_{OUT}}{V_{IN}\times F_{OSC}\times\Delta I_L}$$

To guarantee sufficient output current, peak inductor current must be lower than the FR9886 high-side MOSFET current limit. The peak inductor current is shown as below:

$$I_{PEAK}=I_{OUT(MAX)}+\frac{\Delta I_L}{2}$$

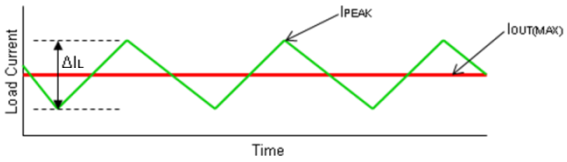

Application Information

Feedforward Capacitor Selection

Internal compensation function allows users saving time in design and saving cost by reducing the number of external components. The use of a feedforward capacitor C6 in the feedback network is recommended to improve the transient response or higher phase margin.

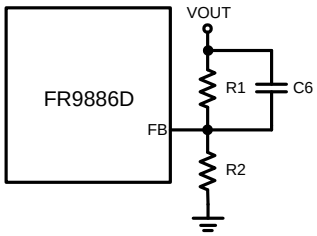

For optimizing the feedforward capacitor, knowing the cross frequency is the first thing. The cross frequency (or the converter bandwidth) can be determined by using a network analyzer. When getting the cross frequency with no feedforward capacitor identified, the value of feedforward capacitor C6 can be calculated with the following equation:

$$C6=\frac{1}{2\pi\times F_{CROSS}}\times\sqrt{\frac{1}{R1}\times\left(\frac{1}{R1}+\frac{1}{R2}\right)}$$

Where F_{CROSS} is the cross frequency.

To reduce transient ripple, the feedforward capacitor value can be increased to push the cross frequency to higher region. Although this can improve transient response, it also decreases phase margin and causes more ringing. In the other hand, if more phase margin is desired, the feedforward capacitor value can be decreased to push the cross frequency to lower region. In general, the feedforward capacitor range is between 10pF to 1nF.

External Boost Diode Selection

For 5V input applications, it is recommended to add an external boost diode. This helps improving the efficiency. The boost diode can be a low cost one such as 1N4148.

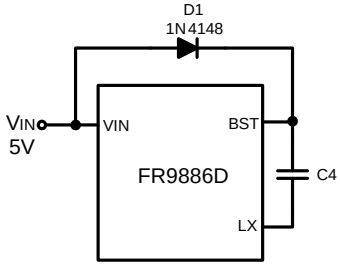

PCB Layout Recommendation

The device's performance and stability are dramatically affected by PCB layout. It is recommended to follow these general guidelines shown as below:

1. Place the input capacitors and output capacitors as close to the device as possible. The traces which connect to these capacitors should be as short and wide as possible to minimize parasitic inductance and resistance.
2. Place feedback resistors close to the FB pin.
3. Keep the sensitive signal (FB) away from the switching signal (LX).
4. The exposed pad of the package should be soldered to an equivalent area of metal on the PCB. This area should connect to the GND plane and have multiple via connections to the back of the PCB as well as connections to intermediate PCB layers. The GND plane area connecting to the exposed pad should be maximized to improve thermal performance.
5. Multi-layer PCB design is recommended.

Application Information (Continued)

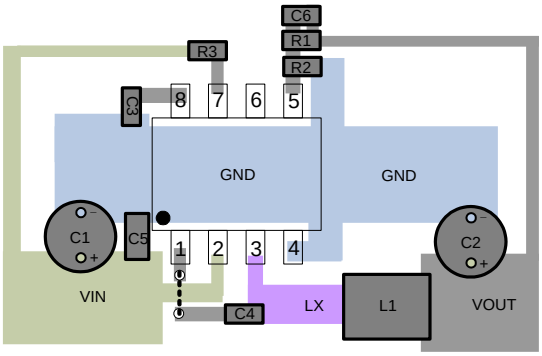

Figure 21. FR9886D SOP-8 package C_{IN}/C_{OUT} with EC capacitors Recommended PCB Layout Diagram

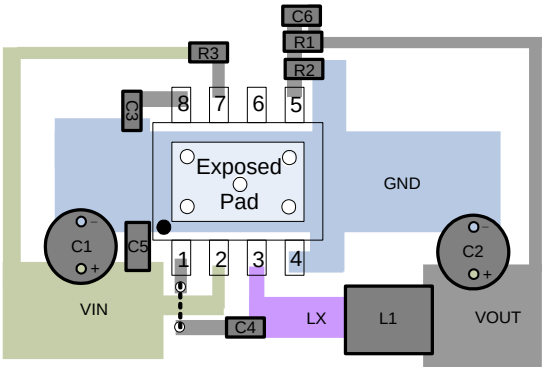

Figure 22. FR9886D SOP-8(Exposed Pad) package C_{IN}/C_{OUT} with EC capacitors Recommended PCB Layout Diagram

Outline Information

SOP-8 Package (Unit: mm)

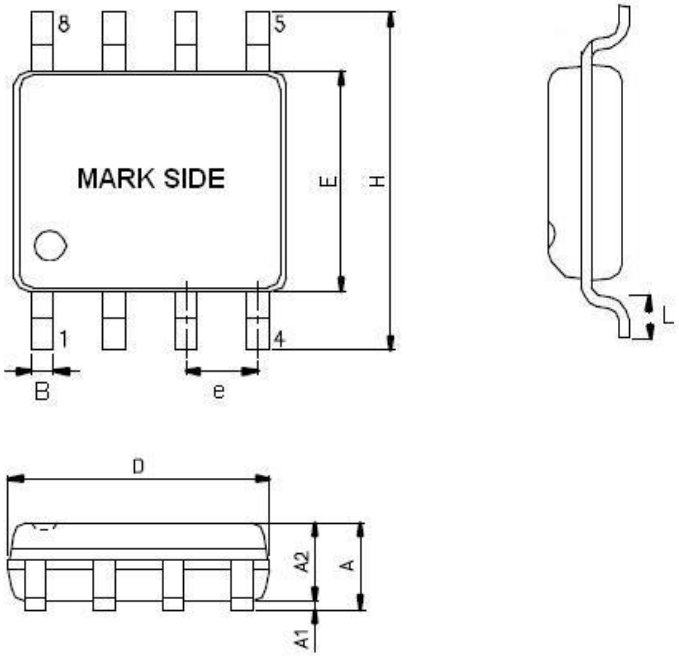

SYMBOLS UNIT	DIMENSION IN MILLIMETER	
	MIN	MAX
A	1.35	1.75
A1	0.10	0.25
A2	1.25	1.50
B	0.31	0.51
D	4.80	5.00
E	3.80	4.00
e	1.20	1.34
H	5.80	6.20
L	0.40	1.27

Note：Followed From JEDEC MO-012-E.

Carrier dimensions

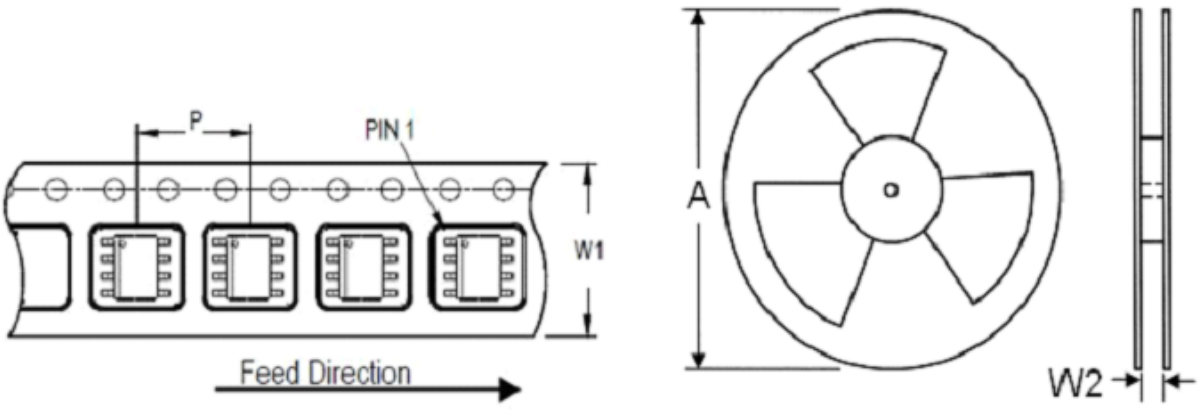

Tape Size (W1) mm	Pocket Pitch (P) mm	Reel Size (A)		Reel Width (W2) mm	Empty Cavity Length mm	Units per Reel
		in	mm			
12	8	13	330	12.4	400~1000	2,500

Outline Information (Continued)

SOP-8 (Exposed Pad) Package (Unit: mm)

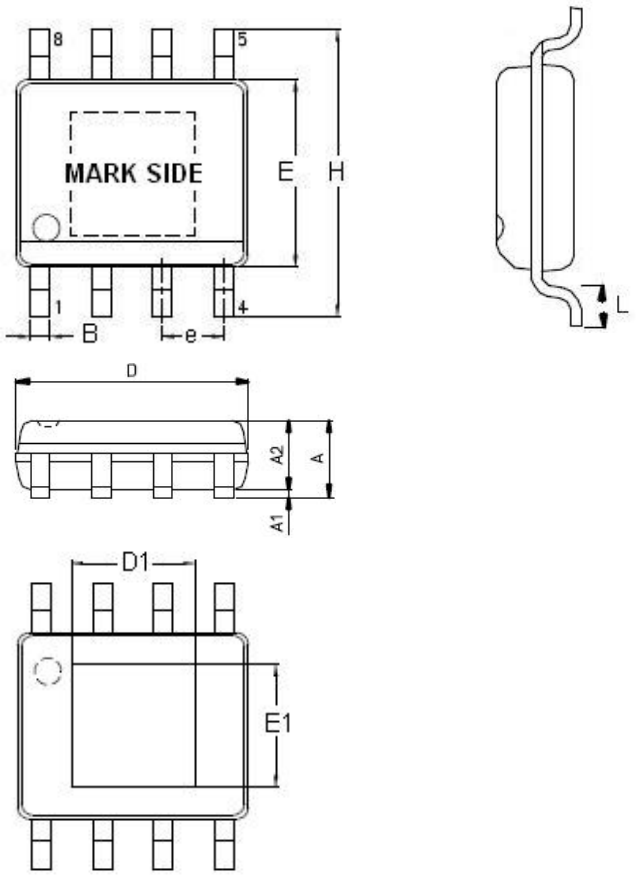

SYMBOLS UNIT	DIMENSION IN MILLIMETER	
	MIN	MAX
A	1.25	1.70
A1	0.00	0.15
A2	1.25	1.55
B	0.31	0.51
D	4.80	5.00
D1	3.04	3.50
E	3.80	4.00
E1	2.15	2.41
e	1.20	1.34
H	5.80	6.20
L	0.40	1.27

Note：Followed From JEDEC MO-012-E.

Carrier dimensions

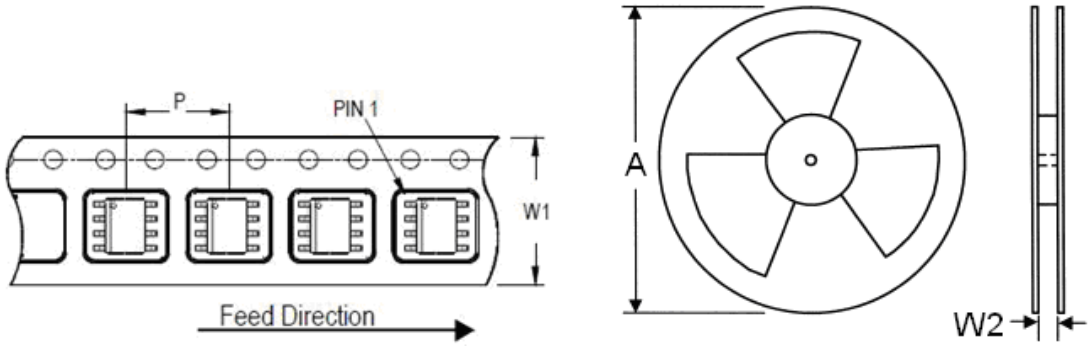

Tape Size (W1) mm	Pocket Pitch (P) mm	Reel Size (A)		Reel Width (W2) mm	Empty Cavity Length mm	Units per Reel
		in	mm			
12	8	13	330	12.4	400~1000	2,500

Life Support Policy
Fitipower's products are not authorized for use as critical components in life support devices or other medical systems.