FR151AG THRU FR157AG

Fast Recovery
Glass Passivated Recitifiers

Reverse Voltage - 50 to 1000 Volts

Forward Current - 1.5 Amperes

Features

- Fast switching for high efficiency
- Low reverse leakage current
- High current capability
- Low forward voltage drop
- Low cost
- Meet UL flammability classification 94V-0

Mechanical Data

- Case: JEDEC DO-41 molded plastic
- Polarity: Color band denotes cathode
- Mounting position: Any

Note: Products with logo HY® or hy® are made by HY Electronic (Cayman) Limited.

Applications

- For use in SMPS, high frequency inverters, PWM and polarity protection applications

DO-41

RoHS COMPLIANT

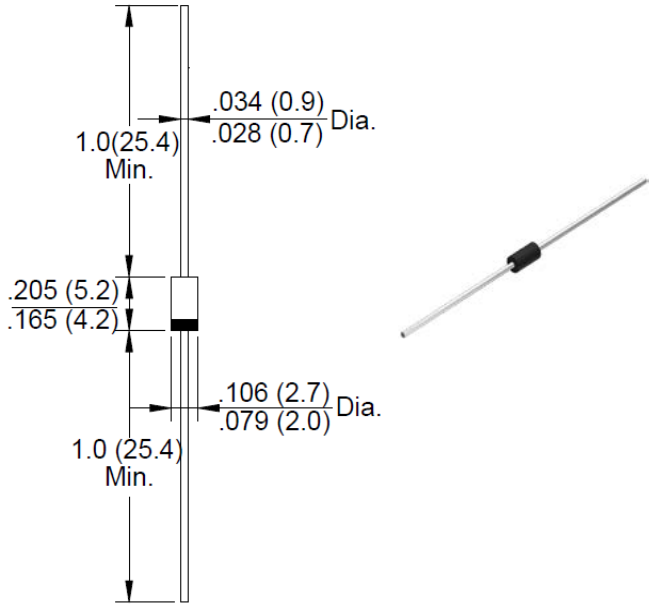

Dimensions in inches and (millimeters)

Maximum Ratings and Electrical Characteristics

Rating at 25℃ ambient temperature unless otherwise specified.

Single phase, half wave ,60Hz, resistive or inductive load.

For capacitive load, derate current by 20%

Characteristics	Symbol	FR151AG	FR152AG	FR153AG	FR154AG	FR155AG	FR156AG	FR157AG	Unit
Maximum Recurrent Peak Reverse Voltage	V_{RRM}	50	100	200	400	600	800	1000	V
Maximum RMS Voltage	V_{RMS}	35	70	140	280	420	560	700	V
Maximum DC Blocking Voltage	V_{DC}	50	100	200	400	600	800	1000	V
Maximum Average Forward Rectified Current @T_A=75 ℃	$I_{(AV)}$	1.5							A
Peak Forward Surge Current 8.3ms Single Half Sine-Wave Super Imposed on Rated Load(JEDEC Method)	I_{FSM}	60							A
Peak Forward Voltage at 1.5A DC	V_F	1.3							V
Maximum DC Reverse Current @T_J=25℃ at Rated DC Blocking Voltage @T_J=100℃	I_R	5.0 100							μA
Maximum Reverse Recovery Time(Note 1)	Trr	150				250	500		nS
Typical Junction Capacitance (Note2)	C_J	30				20			pF
Typical Thermal Resistance (Note3)	$R_{\theta JA}$	25							℃/W
Operating Temperature Range	T_J	-55 to +150							℃
Storage Temperature Range	T_{STG}	-55 to +150							℃

NOTES: 1.Measured with I_F=0.5A,I_R=1A,I_{RR}=0.25A

2.Measured at 1.0 MHz and applied reverse voltage of 4.0V DC

3.Thermal resistance junction to ambient.

4.The typical data above is for reference only

Download from alldatasheet.com

Fig. 1 - Forward Current Derating Curve

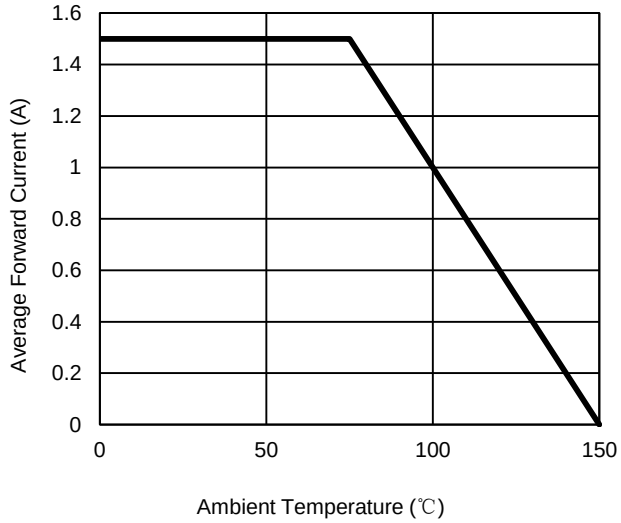

Fig. 2 - Maximum Non-Repetitive Surge Current

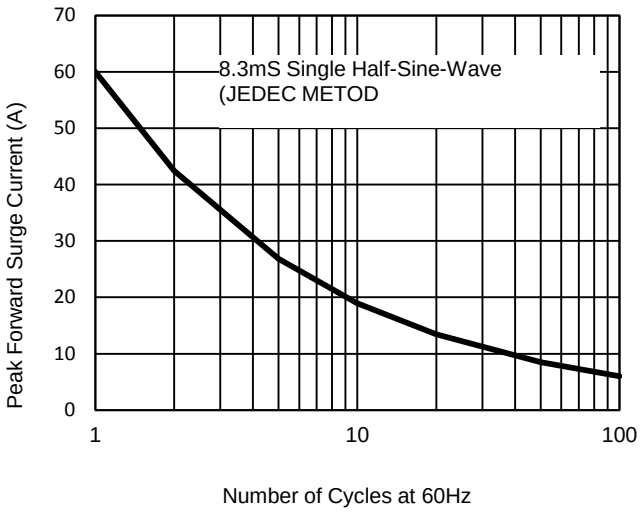

Fig. 3 - Typical Junction Capacitance

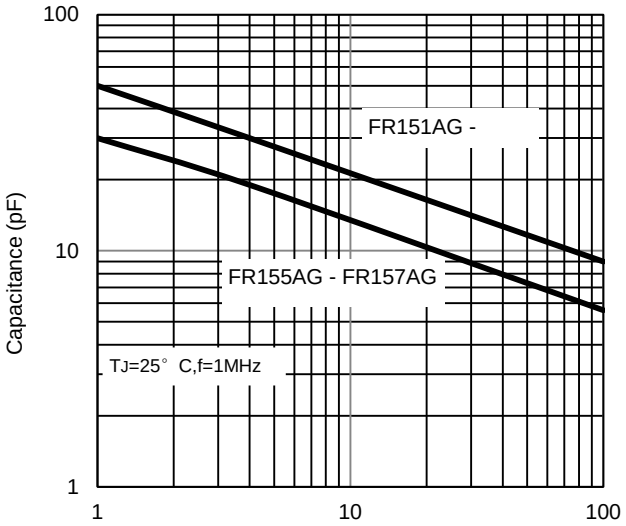

Fig. 4 - Typical Forward Characteristics

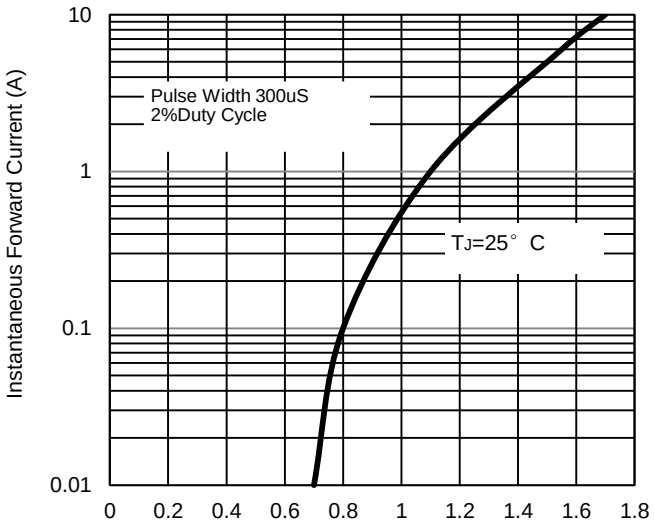

The curve above is for reference only.

Download from alldatasheet.com

Disclaimer

ALL specifications and data are subject to be changed without notice to improve reliability function or design or other reasons.

HY makes no warranty, representation or guarantee regarding the suitability of the products for any particular purpose or the continuing production of any product. To the maximum extent permitted by applicable law, HY disclaims (i) any and all liability arising out of the application or use of any product, (ii) any and all liability, including without limitation special,consequential or incidental damages, and (iii) any and all implied warranties, including warranties of fitness for particular purpose, non-infringement and merchantability.

Statements regarding the suitability of products for certain types of applications are based on HY's knowledge of typical requirements that are often placed on HY products in generic applications. Such statements are not binding statements about the suitability of products for a particular application. It is the customer's responsibility to validate that a particular product with the properties described in the product specification is suitable for use in a particular application.Parameters provided in datasheets and specifications may vary in different applications and performance may vary over time. All operating parameters, including typical parameters, must be validated for each customer application by the customer's technical experts. Product specifications do not expand or otherwise modify HY's terms and conditions of purchase, including but not limited to the warranty expressed therein.

Except as expressly indicated in writing, HY products are not designed for use in medical, life-saving, or life-sustaining applications or for any other applications in which the failure of the HY product could result in personal injury or death. Customers using or selling HY products not expressly indicated for use in such applications do so at their own risk.Please contact authorized HY personnel to obtain written terms and conditions regarding products designed for such applications.

No license, express or implied, by estoppel or otherwise, to any intellectual property rights is granted by this document or by any conduct of HY. Product names and markings noted herein may be trademarks of their respective owners.

Download from alldatasheet.com