Space-saving Plug-in Signal Conditioners F-UNIT

PT TRANSMITTER

(RMS sensing)

Functions & Features

• Converting an alternating voltage from a potential (voltage) transformer into a standard process signal
• Minimum ripple
• RMS sensing
• High-density mounting

Typical Applications

• Centralized monitoring and control of power line and power supply voltage measured at switch boards
• Monitoring abnormal voltage drops for detecting overload

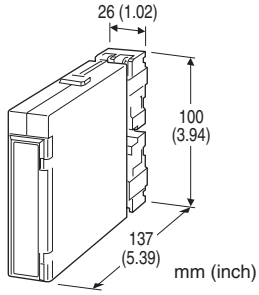

MODEL: FPE–[1][2]–[3][4]

ORDERING INFORMATION

• Code number: FPE-[1][2]-[3][4]
Specify a code from below for each of [1] through [4].
(e.g. FPE-1A-R/Q)
• Special output range (For codes Z & 0)
• Specify the specification for option code /Q
(e.g. /C01/S01)

[1] INPUT

Voltage

1: 0 – 110 V AC
5: 0 – 150 V AC

[2] OUTPUT

Current

A: 4 – 20 mA DC (Load resistance 750 Ω max.)
B: 2 – 10 mA DC (Load resistance 1500 Ω max.)
C: 1 – 5 mA DC (Load resistance 3000 Ω max.)
D: 0 – 20 mA DC (Load resistance 750 Ω max.)
E: 0 – 16 mA DC (Load resistance 900 Ω max.)
F: 0 – 10 mA DC (Load resistance 1500 Ω max.)
G: 0 – 1 mA DC (Load resistance 15 kΩ max.)
Z: Specify current (See OUTPUT SPECIFICATIONS)

Voltage

1: 0 – 10 mV DC (Load resistance 10 kΩ min.)
2: 0 – 100 mV DC (Load resistance 100 kΩ min.)
3: 0 – 1 V DC (Load resistance 1000 Ω min.)
4: 0 – 10 V DC (Load resistance 10 kΩ min.)
5: 0 – 5 V DC (Load resistance 5000 Ω min.)
6: 1 – 5 V DC (Load resistance 5000 Ω min.)
0: Specify voltage (See OUTPUT SPECIFICATIONS)

[3] POWER INPUT

AC Power

K: 85 – 132 V AC
(Operational voltage range 85 – 132 V, 47 – 66 Hz)
L: 170 – 264 V AC
(Operational voltage range 170 – 264 V, 47 – 66 Hz)

DC Power

R: 24 V DC
(Operational voltage range 24 V ±10 %, ripple 10 %p-p max.)
P: 110 V DC
(Operational voltage range 85 – 150 V, ripple 10 %p-p max.)

[4] OPTIONS

blank: none
/Q: With options (specify the specification)

SPECIFICATIONS OF OPTION: Q (multiple selections)

COATING (For the detail, refer to M-System's web site.)

/C01: Silicone coating
/C02: Polyurethane coating
/C03: Rubber coating

TERMINAL SCREW MATERIAL

/S01: Stainless steel

GENERAL SPECIFICATIONS

Construction: Plug-in
Connection: M3.5 screw terminals (torque 0.8 N·m)
Screw terminal: Nickel-plated steel (standard) or stainless steel
Housing material: Flame-resistant resin (black)
Isolation: Input to output to power
Input waveform
RMS sensing: Up to 15 % of 3rd harmonic content
Overrange output: 0 to 120 % at 1 – 5 V
Zero adjustment: -5 to +5 % (front)
Span adjustment: 95 to 105 % (front)

INPUT SPECIFICATIONS

Frequency: 50 or 60 Hz
Input burden: 0.5 VA max.

Overload capacity: 200 % of rating for 1 minute, 120 % continuous
Operational range: 0 – 120 % of rating

OUTPUT SPECIFICATIONS

■ **DC Current**: 0 – 20 mA DC
Minimum span: 1 mA
Offset: Max. 1.5 times span
Load resistance: Output drive 15 V max.
■ **DC Voltage**: 0 – 12 V DC
Minimum span: 5 mV
Offset: Max. 1.5 times span
Load resistance: Output drive 1 mA max.; at ≥ 0.5 V

INSTALLATION

Power input
•**AC**: Approx. 4.5 VA
•**DC**: 24 V approx. 70 mA
110 V approx. 20 mA
Operating temperature: -5 to +55°C (23 to 131°F)
Operating humidity: 30 to 90 %RH (non-condensing)
Mounting: Surface or DIN rail; Standard Rack Mounting Frame BX-16H available
Weight: 200 g (0.44 lb)

PERFORMANCE in percentage of span

Accuracy: ±0.4 %
Temp. coefficient: ±0.02 %/°C (±0.01 %/°F)
Response time: ≤ 0.5 sec. (0 – 90 %)
Ripple: 0.5 %p-p max. (100/120 Hz)
Line voltage effect: ±0.1 % over voltage range
Insulation resistance: ≥ 100 MΩ with 500 V DC
Dielectric strength
Power input code R:
2000 V AC @1 minute (input to output)
2000 V AC @1 minute (input or output or power to ground)
500 V AC @1 minute (I/O to power)
Power input code K, L, P:
2000 V AC @1 minute (input to output)
2000 V AC @1 minute (input or output or power to ground)
1500 V AC @1 minute (I/O to power)

EXTERNAL DIMENSIONS & TERMINAL ASSIGNMENTS unit: mm (inch)

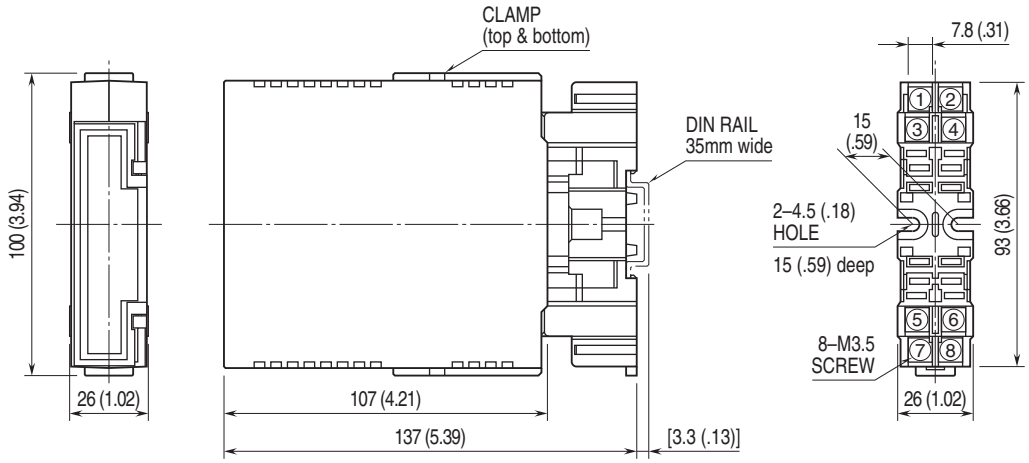

•When mounting, no extra space is needed between units.

SCHEMATIC CIRCUITRY & CONNECTION DIAGRAM

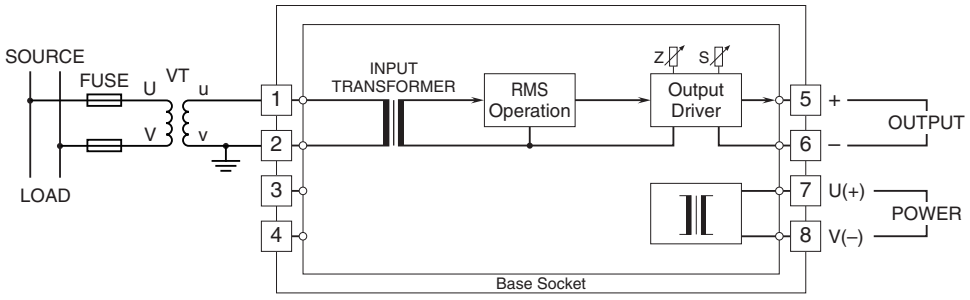

⚠ Specifications are subject to change without notice.