

Is Now Part of



ON Semiconductor®

To learn more about ON Semiconductor, please visit our website at
www.onsemi.com

Please note: As part of the Fairchild Semiconductor integration, some of the Fairchild orderable part numbers will need to change in order to meet ON Semiconductor's system requirements. Since the ON Semiconductor product management systems do not have the ability to manage part nomenclature that utilizes an underscore (_), the underscore (_) in the Fairchild part numbers will be changed to a dash (-). This document may contain device numbers with an underscore (_). Please check the ON Semiconductor website to verify the updated device numbers. The most current and up-to-date ordering information can be found at www.onsemi.com. Please email any questions regarding the system integration to Fairchild_questions@onsemi.com.

ON Semiconductor and the ON Semiconductor logo are trademarks of Semiconductor Components Industries, LLC dba ON Semiconductor or its subsidiaries in the United States and/or other countries. ON Semiconductor owns the rights to a number of patents, trademarks, copyrights, trade secrets, and other intellectual property. A listing of ON Semiconductor's product/patent coverage may be accessed at www.onsemi.com/site/pdf/Patent-Marking.pdf. ON Semiconductor reserves the right to make changes without further notice to any products herein. ON Semiconductor makes no warranty, representation or guarantee regarding the suitability of its products for any particular purpose, nor does ON Semiconductor assume any liability arising out of the application or use of any product or circuit, and specifically disclaims any and all liability, including without limitation special, consequential or incidental damages. Buyer is responsible for its products and applications using ON Semiconductor products, including compliance with all laws, regulations and safety requirements or standards, regardless of any support or applications information provided by ON Semiconductor. "Typical" parameters which may be provided in ON Semiconductor data sheets and/or specifications can and do vary in different applications and actual performance may vary over time. All operating parameters, including "Typicals" must be validated for each customer application by customer's technical experts. ON Semiconductor does not convey any license under its patent rights nor the rights of others. ON Semiconductor products are not designed, intended, or authorized for use as a critical component in life support systems or any FDA Class 3 medical devices or medical devices with a same or similar classification in a foreign jurisdiction or any devices intended for implantation in the human body. Should Buyer purchase or use ON Semiconductor products for any such unintended or unauthorized application, Buyer shall indemnify and hold ON Semiconductor and its officers, employees, subsidiaries, affiliates, and distributors harmless against all claims, costs, damages, and expenses, and reasonable attorney fees arising out of, directly or indirectly, any claim of personal injury or death associated with such unintended or unauthorized use, even if such claim alleges that ON Semiconductor was negligent regarding the design or manufacture of the part. ON Semiconductor is an Equal Opportunity/Affirmative Action Employer. This literature is subject to all applicable copyright laws and is not for resale in any manner.

July 2016

FPAM30LH60

PFC SPM® 2 Series for 2-Phase Interleaved PFC

Features

- UL Certified No.E209204 (UL1557)
- 600 V - 30 A 2-Phase Interleaved PFC with Integral Gate Driver and Protection
- Very Low Thermal Resistance Using Al_2O_3 DBC Substrate
- Full-Wave Bridge Rectifier and High-Performance Output Diode
- Optimized for 20kHz Switching Frequency
- Built-in NTC Thermistor for Temperature Monitoring
- Isolation Rating: 2500 V_{rms}/min

Applications

- 2-Phase Interleaved PFC Converter

General Description

The FPAM30LH60 is a PFC SPM® 2 module providing a fully-featured, high-performance Interleaved PFC (Power Factor Correction) input power stage for consumer, medical, and industrial applications. These modules integrate optimized gate drive of the built-in IGBTs to minimize EMI and losses, while also providing multiple on-module protection features including under-voltage lockout, over-current shutdown, thermal monitoring, and fault reporting. These modules also feature a full-wave rectifier and high-performance output diodes for additional space savings and mounting convenience.

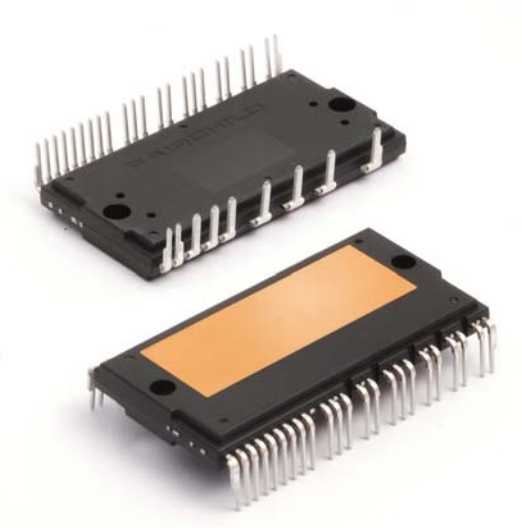

Fig. 1. Package Overview

Package Marking and Ordering Information

Device	Device Marking	Package	Packing Type	Quantity
FPAM30LH60	FPAM30LH60	S32EA-032	Rail	8

©2012 Fairchild Semiconductor Corporation

Integrated Drive, Protection and System Control Functions

- For IGBTs: gate drive circuit, Over-Current Protection (OCP), control supply circuit Under-Voltage Lock-Out (UVLO) Protection
- Fault signal: corresponding to OC and UV fault
- Built-in thermistor: temperature monitoring
- Input interface : active-HIGH interface, works with 3.3 / 5 V logic, Schmitt trigger input

Pin Configuration

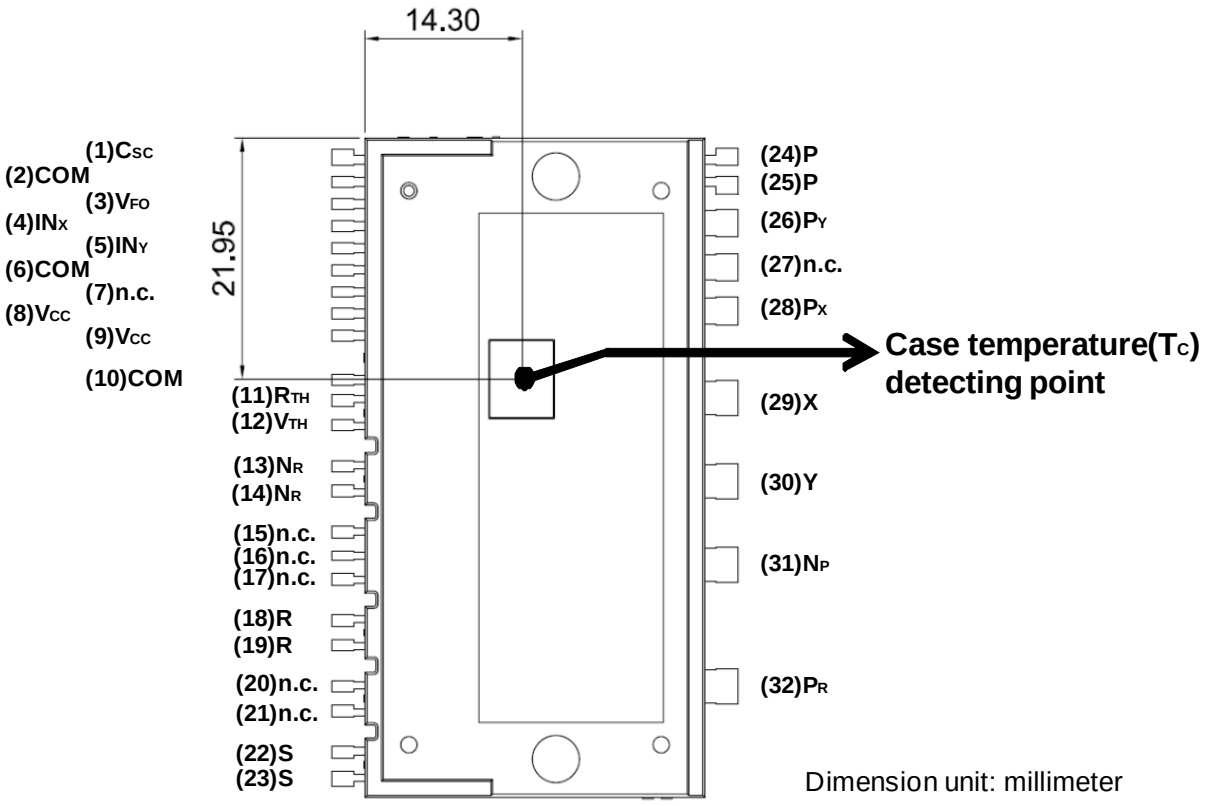

Figure 2. Top View

Pin Descriptions

Pin Number	Pin Name	Pin Description
1	C_{SC}	Signal Input for Over-Current Detection
2,6,10	COM	Common Supply Ground
3	V_{FO}	Fault Output
4	IN_X	PWM Input for X IGBT Drive
5	IN_Y	PWM Input for Y IGBT Drive
7	N.C	No Connection
8,9	V_{CC}	Common Supply Voltage of IC for IGBT Drive
11	R_{TH}	Series Resistor for The Use of Thermistor
12	V_{TH}	Thermistor Bias Voltage
13,14	N_R	Negative DC-Link of Rectifier Diode
15,16,17	N.C	No Connection
18,19	R	AC Input for R-Phase
20,21	N.C	No Connection
22,23	S	AC Input for S-Phase
24,25	P	Output of Diode
26	P_Y	Input of Diode
27	N.C	No Connection
28	P_X	Input of Diode
29	X	Output of X Phase IGBT
30	Y	Output of Y Phase IGBT
31	N_P	Negative DC-Link of IGBT
32	P_R	Positive DC-Link of Rectifier Diode

Internal Equivalent Circuit

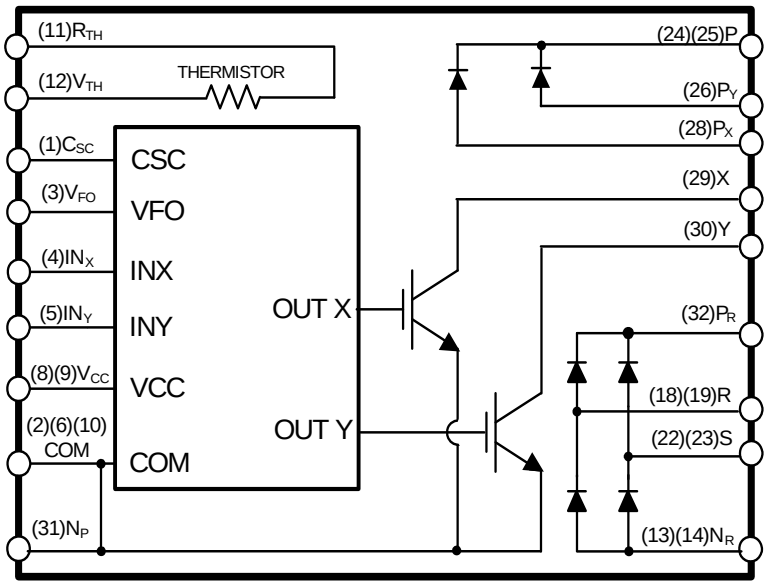

Figure 3. Internal Block Diagram

Absolute Maximum Ratings (T_J = 25°C, unless otherwise specified.)

Converter Part

Symbol	Parameter	Conditions	Rating	Unit
V_i	Input Supply Voltage	Applied between R - S	264	V_{rms}
V_{PN}	Output Voltage	Applied between X - N_P, Y - N_P, P - P_X, P - P_Y	450	V
$V_{PN(Surge)}$	Output Supply Voltage (Surge)	Applied between X - N_P, Y - N_P, P - P_X, P - P_Y	500	V
V_{CES}	Collector-emitter Voltage	Breakdown Voltage between X - N_P, Y - N_P	600	V
V_{RRM}	Repetitive Peak Reverse Voltage of FRD	Breakdown Voltage between P - P_X, P - P_Y	600	V
V_{RRMR}	Repetitive Peak Reverse Voltage of Rectifier	Breakdown Voltage between P_R - R, P_R - S, R - N_R, S - N_R	900	V
$*I_F$	FRD Forward Current	T_C = 25°C, T_J < 125°C	30	A
$*I_{FSM}$	Peak Surge Current of FRD	Non-Repetitive, 60 Hz Single Half-Sine Wave	300	A
$*I_{FR}$	Rectified Forward Current	T_C = 25°C, T_J < 125°C	30	A
$*I_{FSMR}$	Peak Surge Current of Rectifier	Non-Repetitive, 60 Hz Single Half-Sine Wave	300	A
$\pm *I_C$	Each IGBT Collector Current	T_C = 25°C, T_J < 125°C	30	A
$\pm *I_{CP}$	Each IGBT Collector Current(Peak)	T_C = 25°C, T_J < 125°C, Under 1 ms Pulse Width	60	A
$*P_C$	Collector Dissipation	T_C = 25°C per IGBT	107	W
T_J	Operating Junction Temperature	(1st Note 1)	-40 ~ 125	°C

1st Notes:

1. The maximum junction temperature rating of the power chips integrated within the PFC SPM® product is 125°C.
2. Marking " * " is calculation value or design factor.

Control Part

Symbol	Parameter	Conditions	Rating	Unit
V_{CC}	Control Supply Voltage	Applied between V_{CC} - COM	20	V
V_{IN}	Input Signal Voltage	Applied between IN_X, IN_Y - COM	-0.3 ~ V_{CC} + 0.3	V
V_{FO}	Fault Output Supply Voltage	Applied between V_{FO} - COM	-0.3 ~ V_{CC} + 0.3	V
I_{FO}	Fault Output Current	Sink Current at V_{FO} Pin	1	mA
V_{SC}	Current Sensing Input Voltage	Applied between C_{SC} - COM	-0.3 ~ V_{CC} + 0.3	V

Total System

Symbol	Parameter	Conditions	Rating	Unit
T_{STG}	Storage Temperature		-40 ~ 125	°C
V_{ISO}	Isolation Voltage	60 Hz, Sinusoidal, AC 1 Minute, Connect Pins to Heat-Sink Plate	2500	V_{rms}

Thermal Resistance

Symbol	Parameter	Condition	Min.	Typ.	Max.	Unit
$R_{th(j-c)Q}$	Junction to Case Thermal Resistance	Each IGBT under Operating Condition	-	-	0.93	°C/W
$R_{th(j-c)D}$		Each Diode under Operating Condition	-	-	1.42	°C/W
$R_{th(j-c)R}$		Each Rectifier under Operating Condition	-	-	0.74	°C/W

Electrical Characteristics (T_J = 25°C, unless otherwise specified.)

Converter Part

Symbol	Parameter	Conditions	Min.	Typ.	Max.	Unit
$V_{CE(SAT)}$	IGBT Saturation Voltage	V_{CC} = 15 V, V_{IN} = 5 V, I_C = 30 A	-	1.7	2.2	V
V_{FF}	FRD Forward Voltage	I_F = 30 A	-	1.9	2.4	V
V_{FR}	Rectifier Forward Voltage	I_{FR} = 30 A	-	1.10	1.25	V
I_{RR}	Switching Characteristic	V_{PN} = 400 V, V_{CC} = 15 V, I_C = 15 A, V_{IN} = 0 V ↔ 5 V, Inductive Load (1st Note 3), per IGBT	-	11	-	A
t_{RR}			-	41	-	ns
t_{ON}			-	700	-	ns
t_{OFF}			-	852	-	ns
$t_{C(ON)}$			-	104	-	ns
$t_{C(OFF)}$			-	102	-	ns
I_{CES}	Collector - Emitter Leakage Current	V_{CES} = 600 V	-	-	250	μA

1st Notes:

3. t_{ON} and t_{OFF} include the propagation delay of the internal drive IC. $t_{C(ON)}$ and $t_{C(OFF)}$ are the switching time of IGBT itself under the given gate driving condition internally. For the detailed information, please see Figure 4.

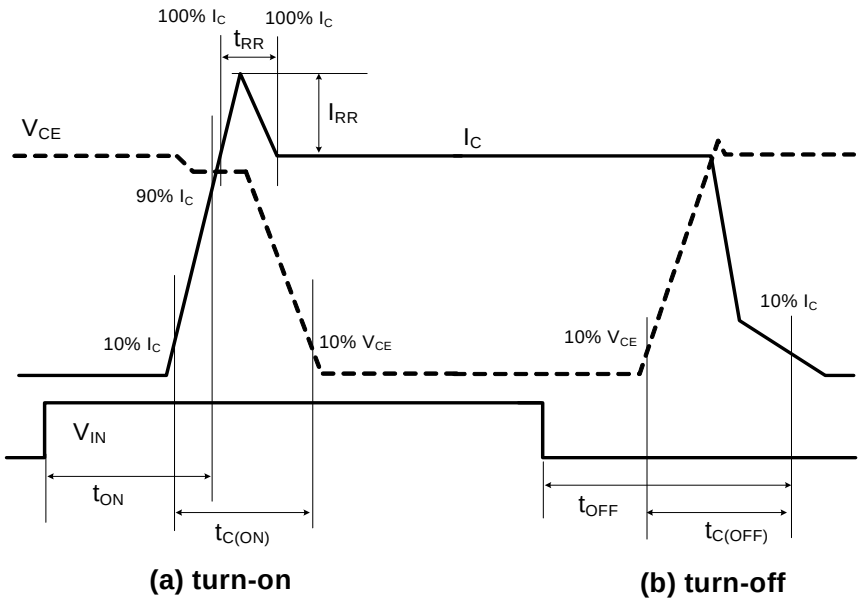

Figure 4. Switching Time Definition

Control Part

Symbol	Parameter	Conditions	Min.	Typ.	Max.	Unit
I_{QCC}	Quiescent V_{CC} Supply Current	V_{CC} = 15 V, IN_X, IN_Y - COM = 0 V, Supply current between V_{CC} and COM	-	-	2.65	mA
I_{PCC}	Operating V_{CC} Supply Current	V_{CC} = 15 V, f_{PWM} = 20 kHz, Duty = 50% Applied to One PWM Signal Input per IGBT Supply Current between V_{CC} and COM	-	-	6.0	mA
V_{FOH}	Fault Output Voltage	V_{SC} = 0 V, V_{FO} Circuit: 10 kΩ to 5 V Pull-up	4.5	-	-	V
V_{FOL}		V_{SC} = 1 V, V_{FO} Circuit: 10 kΩ to 5 V Pull-up	-	-	0.5	V
$V_{SC(Ref)}$	Over-Current Protection Trip Level Voltage of CSC Pin	V_{CC} = 15 V	0.45	0.50	0.55	V
UV_{CCD}	Supply Circuit Under-Voltage Protection	Detection Level	10.5	-	13.0	V
UV_{CCR}		Reset Level	11.0	-	13.5	V
t_{FOD}	Fault-Out Pulse Width		30	-	-	μs
$V_{IN(ON)}$	ON Threshold Voltage	Applied between IN_X, IN_Y - COM	2.6	-	-	V
$V_{IN(OFF)}$	OFF Threshold Voltage	Applied between IN_X, IN_Y - COM	-	-	0.8	V
R_{TH}	Resistance of Thermistor	at T_{TH} = 25°C (1st Note 4, Figure 5)	-	47	-	kΩ
		at T_{TH} = 100°C (1st Note 4, Figure 5)	-	2.9	-	kΩ

1st Notes:

4. T_{TH} is the temperature of thermister itself. To know case temperature (T_C), please make the experiment considering your application.

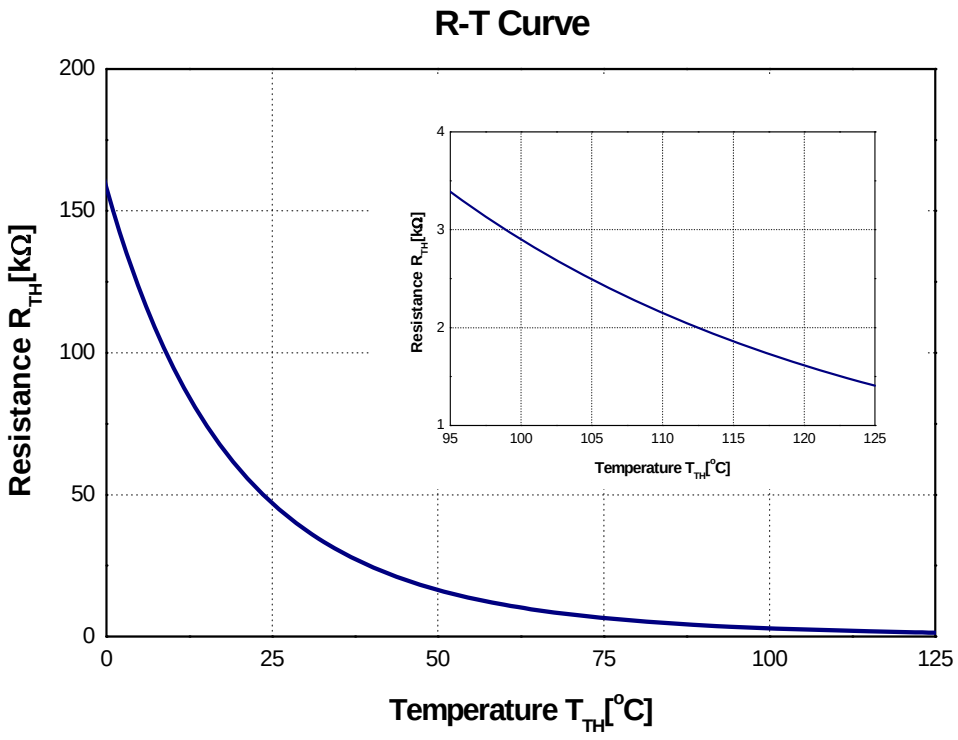

Figure 5. R-T Curve of The Built-in Thermistor

Recommended Operating Conditions (T_J = 25°C, unless otherwise specified.)

Symbol	Parameter	Conditions	Min.	Typ.	Max.	Unit
V_i	Input Supply Voltage	Applied between R - S	187	-	253	V_{rms}
I_i	Input Current	T_C < 100°C, V_i = 220 V, V_O = 360 V, f_{PWM} = 20 kHz per IGBT	-	-	21	A_{rms}
V_{PN}	Supply Voltage	Applied between X - N_P, Y - N_P, P - P_X, P - P_Y	-	-	400	V
V_{CC}	Control Supply Voltage	Applied between V_{CC} - COM	13.5	15.0	16.5	V
dV_{CC}/dt	Supply Variation		-1	-	1	V / μs
I_{FO}	Fault Output Current	Sink Current at V_{FO} Pin	-	-	1	mA
f_{PWM}	PWM Input Frequency	-40°C < T_J < 125°C per IGBT	-	20	-	kHz

Mechanical Characteristics and Ratings

Parameter	Conditions		Min.	Typ.	Max.	Unit
Mounting Torque	Mounting Screw: M4	Recommended 0.98 N•m	0.78	0.98	1.17	N•m
		Recommended 10 kg•cm	8	10	12	kg•cm
Device Flatness	See Figure 6		0	-	+150	μm
Weight			-	32	-	g

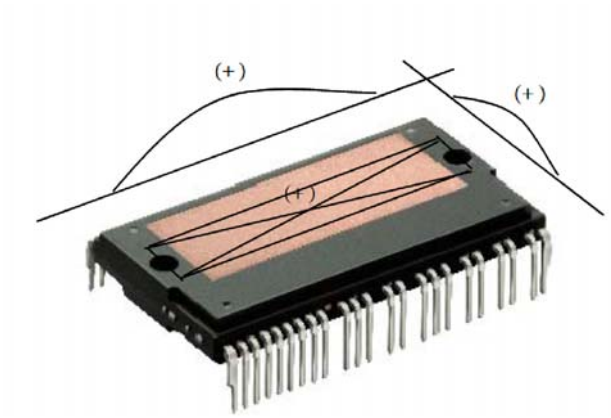

Figure 6. Flatness Measurement Position

Time Charts of Protective Function

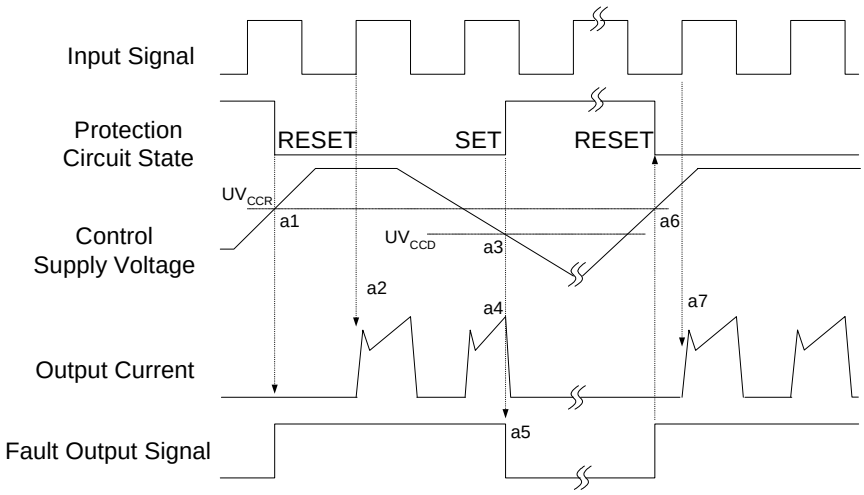

a1 : Control supply voltage rises: after the voltage rises UV_{CCR}, the circuits start to operate when the next input is applied.

a2 : Normal operation: IGBT ON and carrying current.

a3 : Under-voltage detection (UV_{CCD}).

a4 : IGBT OFF in spite of control input condition.

a5 : Fault output operation starts.

a6 : Under-voltage reset (UV_{CCR}).

a7 : Normal operation: IGBT ON and carrying current.

Figure 7. Under-Voltage Protection

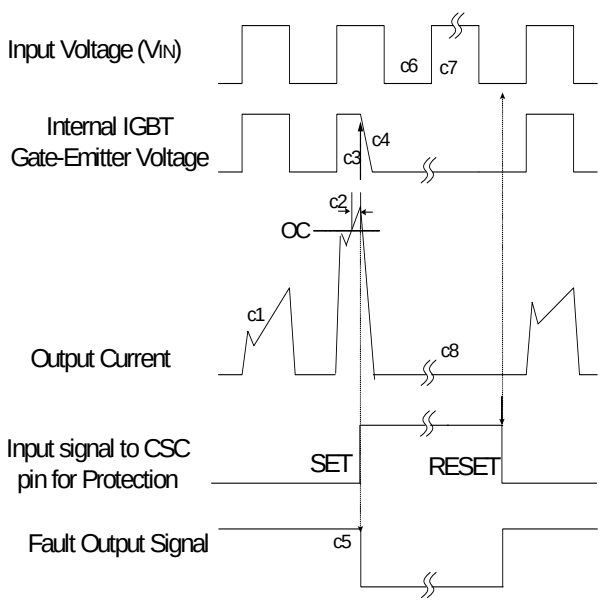

(with the external over current detection circuit)

c1 : Normal operation: IGBT ON and carrying current.

c2 : Over-current detection (OC trigger).

c3 : Hard IGBT gate interrupt.

c4 : IGBT turns OFF.

c5 : Fault output timer operation starts.

c6 : Input “LOW”: IGBT OFF state.

c7 : Input “HIGH”: IGBT ON state, but during the active period of fault output the IGBT doesn’t turn ON.

c8 : IGBT OFF state.

Figure 8. Over-Current Protection

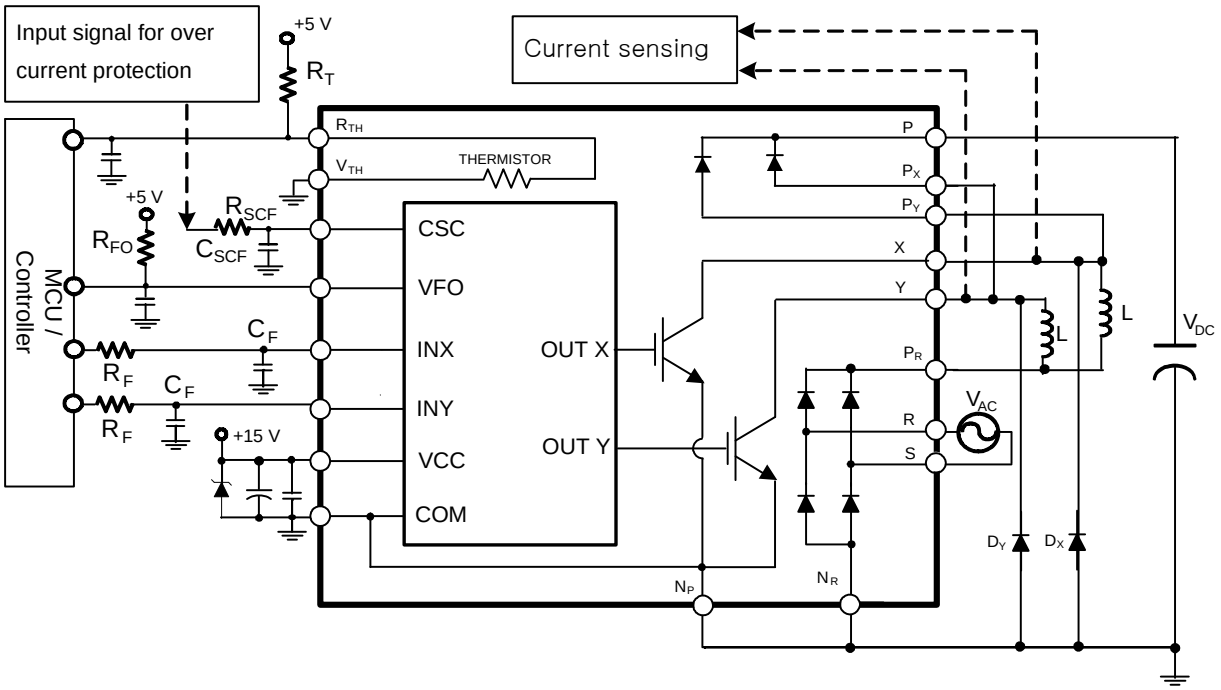

Figure 9. Typical Application Circuit

2nd Notes:

1. To avoid malfunction, the wiring of each input should be as short as possible(less than 2 ~ 3 cm).
2. V_{FO} output is open-drain type. This signal line should be pulled up to the positive-side of the MCU or control power supply with a resistor that makes I_{FO} up to 1 mA.
3. Input signal is active-HIGH type. There is a 5 kΩ resistor inside the IC to pull-down each input signal line to GND. RC coupling circuits is recommanded for the prevention of input signal oscillation. R_FC_F constant should be selected in the range 50~150ns(recommended R_F = 100 Ω , C_F = 1 nF).
4. To prevent error of the protection function, the wiring related with R_{SCF} and C_{SCF} should be as short as possible.
5. In the over current protection circuit, please select the R_{SCF} , C_{SCF} time constant in the range 1.5 ~ 2 μs.
6. Each capacitors should be mounted as close to the PFC SPM® product pins as possible.
7. Relays are used at almost every systems of electrical equipments of home appliances. In these cases, there should be sufficient distance between the MCU / controller and the relays.
8. Internal NTC thermistor can be used for monitoring of the case temperature and protecting the device from the overheating operation. Select an appropriate resistor R_T according to the application.
9. It is recommended that anti-parallel diode(D_X ,D_Y) be connected with each IGBT.

Detailed Package Outline Drawings

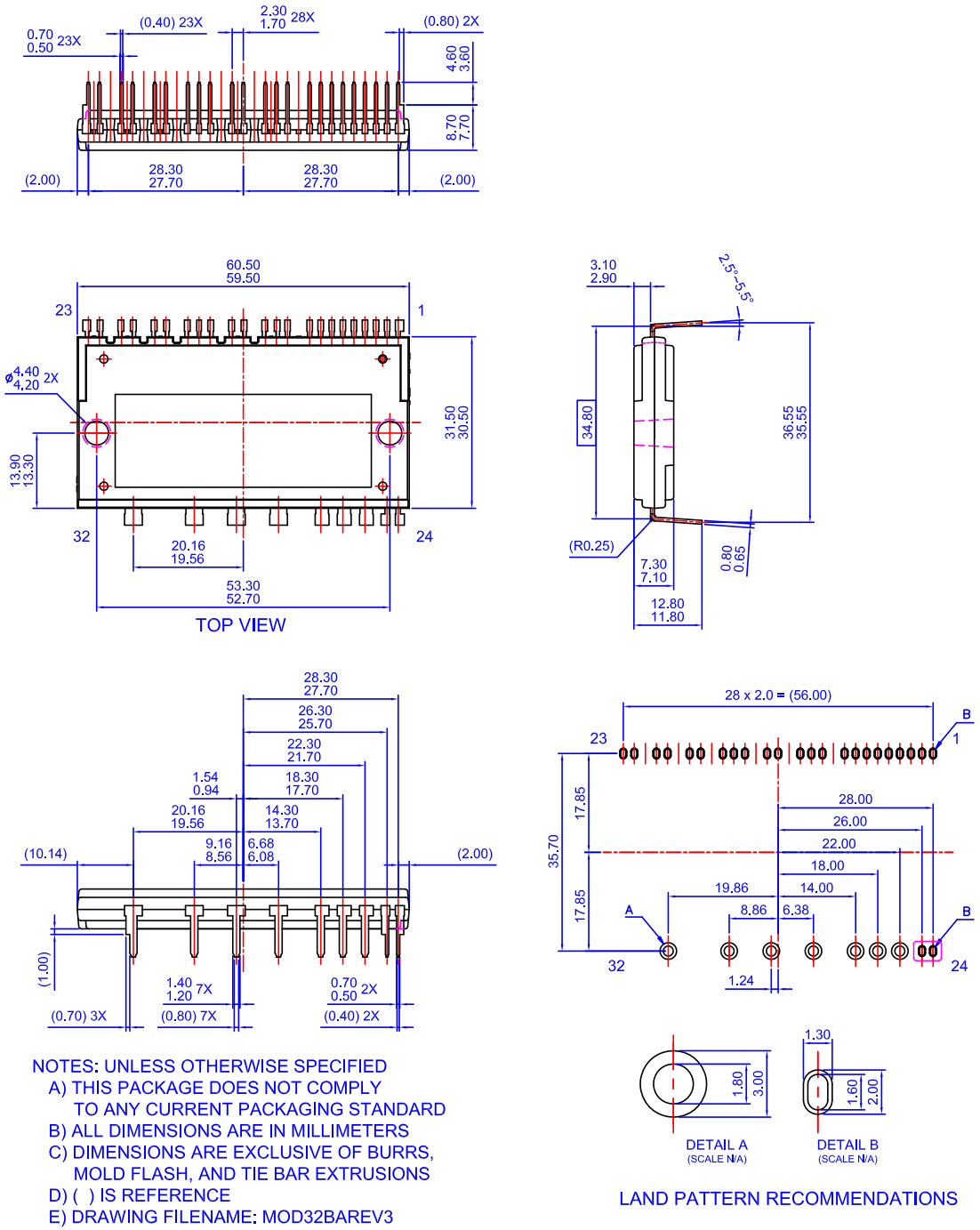

Package drawings are provided as a service to customers considering Fairchild components. Drawings may change in any manner without notice. Please note the revision and/or data on the drawing and contact a FairchildSemiconductor representative to verify or obtain the most recent revision. Package specifications do not expand the terms of Fairchild's worldwide therm and conditions, specifically the the warranty therein, which covers Fairchild products.

Always visit Fairchild Semiconductor's online packaging area for the most recent package drawings:

https://www.fairchildsemi.com/package-drawings/MO/MOD32BA.pdf

FAIRCHILD

TRADEMARKS

The following includes registered and unregistered trademarks and service marks, owned by Fairchild Semiconductor and/or its global subsidiaries, and is not intended to be an exhaustive list of all such trademarks.

AccuPower™
AttitudeEngine™
Awinda®
AX-CAP®*
BitSiC™
Build it Now™
CorePLUS™
CorePOWER™
CROSSVOLT™
CTL™
Current Transfer Logic™
DEUXPEED®
Dual Cool™
EcoSPARK®
EfficientMax™
ESBC™
F®
Fairchild®
Fairchild Semiconductor®
FACT Quiet Series™
FACT®
FastvCore™
FETBench™
FPS™
F-PFS™
FRFET®
Global Power Resource SM
GreenBridge™
Green FPS™
Green FPS™ e-Series™
G*max*™
GTO™
IntelliMAX™
ISOPLANAR™
Making Small Speakers Sound Louder and Better™
MegaBuck™
MICROCOUPLER™
MicroFET™
MicroPak™
MicroPak2™
MillerDrive™
MotionMax™
MotionGrid®
MTi®
MTx®
MVN®
mWSaver®
OptoHiT™
OPTOLOGIC®
OPTOPLANAR®
®
Power Supply WebDesigner™
PowerTrench®
PowerXS™
Programmable Active Droop™
QFET®
QS™
Quiet Series™
RapidConfigure™
™
Saving our world, 1mW/W/kW at a time™
SignalWise™
SmartMax™
SMART START™
Solutions for Your Success™
SPM®
STEALTH™
SuperFET®
SuperSOT™-3
SuperSOT™-6
SuperSOT™-8
SupreMOS®
SyncFET™
Sync-Lock™
SYSTEM GENERAL®*
TinyBoost®
TinyBuck®
TinyCalc™
TinyLogic®
TINYOPTO™
TinyPower™
TinyPWM™
TinyWire™
TranSiC™
TriFault Detect™
TRUECURRENT®*
μSerDes™
SerDes
UHC®
Ultra FRFET™
UniFET™
VCX™
VisualMax™
VoltagePlus™
XS™
Xsens™
仙童®

* Trademarks of System General Corporation, used under license by Fairchild Semiconductor.

DISCLAIMER

FAIRCHILD SEMICONDUCTOR RESERVES THE RIGHT TO MAKE CHANGES WITHOUT FURTHER NOTICE TO ANY PRODUCTS HEREIN TO IMPROVE RELIABILITY, FUNCTION, OR DESIGN. TO OBTAIN THE LATEST, MOST UP-TO-DATE DATASHEET AND PRODUCT INFORMATION, VISIT OUR WEBSITE AT HTTP://WWW.FAIRCHILDSEMI.COM. FAIRCHILD DOES NOT ASSUME ANY LIABILITY ARISING OUT OF THE APPLICATION OR USE OF ANY PRODUCT OR CIRCUIT DESCRIBED HEREIN; NEITHER DOES IT CONVEY ANY LICENSE UNDER ITS PATENT RIGHTS, NOR THE RIGHTS OF OTHERS. THESE SPECIFICATIONS DO NOT EXPAND THE TERMS OF FAIRCHILD'S WORLDWIDE TERMS AND CONDITIONS, SPECIFICALLY THE WARRANTY THEREIN, WHICH COVERS THESE PRODUCTS.

AUTHORIZED USE

Unless otherwise specified in this data sheet, this product is a standard commercial product and is not intended for use in applications that require extraordinary levels of quality and reliability. This product may not be used in the following applications, unless specifically approved in writing by a Fairchild officer: (1) automotive or other transportation, (2) military/aerospace, (3) any safety critical application – including life critical medical equipment – where the failure of the Fairchild product reasonably would be expected to result in personal injury, death or property damage. Customer's use of this product is subject to agreement of this Authorized Use policy. In the event of an unauthorized use of Fairchild's product, Fairchild accepts no liability in the event of product failure. In other respects, this product shall be subject to Fairchild's Worldwide Terms and Conditions of Sale, unless a separate agreement has been signed by both Parties.

ANTI-COUNTERFEITING POLICY

Fairchild Semiconductor Corporation's Anti-Counterfeiting Policy. Fairchild's Anti-Counterfeiting Policy is also stated on our external website, www.fairchildsemi.com, under Terms of Use

Counterfeiting of semiconductor parts is a growing problem in the industry. All manufacturers of semiconductor products are experiencing counterfeiting of their parts. Customers who inadvertently purchase counterfeit parts experience many problems such as loss of brand reputation, substandard performance, failed applications, and increased cost of production and manufacturing delays. Fairchild is taking strong measures to protect ourselves and our customers from the proliferation of counterfeit parts. Fairchild strongly encourages customers to purchase Fairchild parts either directly from Fairchild or from Authorized Fairchild Distributors who are listed by country on our web page cited above. Products customers buy either from Fairchild directly or from Authorized Fairchild Distributors are genuine parts, have full traceability, meet Fairchild's quality standards for handling and storage and provide access to Fairchild's full range of up-to-date technical and product information. Fairchild and our Authorized Distributors will stand behind all warranties and will appropriately address any warranty issues that may arise. Fairchild will not provide any warranty coverage or other assistance for parts bought from Unauthorized Sources. Fairchild is committed to combat this global problem and encourage our customers to do their part in stopping this practice by buying direct or from authorized distributors.

PRODUCT STATUS DEFINITIONS

Definition of Terms

Datasheet Identification	Product Status	Definition
Advance Information	Formative / In Design	Datasheet contains the design specifications for product development. Specifications may change in any manner without notice.
Preliminary	First Production	Datasheet contains preliminary data; supplementary data will be published at a later date. Fairchild Semiconductor reserves the right to make changes at any time without notice to improve design.
No Identification Needed	Full Production	Datasheet contains final specifications. Fairchild Semiconductor reserves the right to make changes at any time without notice to improve the design.
Obsolete	Not In Production	Datasheet contains specifications on a product that is discontinued by Fairchild Semiconductor. The datasheet is for reference information only.

Rev. I77

ON Semiconductor and ON are trademarks of Semiconductor Components Industries, LLC dba ON Semiconductor or its subsidiaries in the United States and/or other countries. ON Semiconductor owns the rights to a number of patents, trademarks, copyrights, trade secrets, and other intellectual property. A listing of ON Semiconductor's product/patent coverage may be accessed at www.onsemi.com/site/pdf/Patent−Marking.pdf. ON Semiconductor reserves the right to make changes without further notice to any products herein. ON Semiconductor makes no warranty, representation or guarantee regarding the suitability of its products for any particular purpose, nor does ON Semiconductor assume any liability arising out of the application or use of any product or circuit, and specifically disclaims any and all liability, including without limitation special, consequential or incidental damages. Buyer is responsible for its products and applications using ON Semiconductor products, including compliance with all laws, regulations and safety requirements or standards, regardless of any support or applications information provided by ON Semiconductor. "Typical" parameters which may be provided in ON Semiconductor data sheets and/or specifications can and do vary in different applications and actual performance may vary over time. All operating parameters, including "Typicals" must be validated for each customer application by customer's technical experts. ON Semiconductor does not convey any license under its patent rights nor the rights of others. ON Semiconductor products are not designed, intended, or authorized for use as a critical component in life support systems or any FDA Class 3 medical devices or medical devices with a same or similar classification in a foreign jurisdiction or any devices intended for implantation in the human body. Should Buyer purchase or use ON Semiconductor products for any such unintended or unauthorized application, Buyer shall indemnify and hold ON Semiconductor and its officers, employees, subsidiaries, affiliates, and distributors harmless against all claims, costs, damages, and expenses, and reasonable attorney fees arising out of, directly or indirectly, any claim of personal injury or death associated with such unintended or unauthorized use, even if such claim alleges that ON Semiconductor was negligent regarding the design or manufacture of the part. ON Semiconductor is an Equal Opportunity/Affirmative Action Employer. This literature is subject to all applicable copyright laws and is not for resale in any manner.

PUBLICATION ORDERING INFORMATION

LITERATURE FULFILLMENT:
Literature Distribution Center for ON Semiconductor
19521 E. 32nd Pkwy, Aurora, Colorado 80011 USA
Phone: 303−675−2175 or 800−344−3860 Toll Free USA/Canada
Fax: 303−675−2176 or 800−344−3867 Toll Free USA/Canada
Email: orderlit@onsemi.com

N. American Technical Support: 800−282−9855 Toll Free USA/Canada
Europe, Middle East and Africa Technical Support:
Phone: 421 33 790 2910
Japan Customer Focus Center
Phone: 81−3−5817−1050

ON Semiconductor Website: **www.onsemi.com**

Order Literature: http://www.onsemi.com/orderlit

For additional information, please contact your local Sales Representative