Dual Channel PWM Controller with SCP / DTC Function

Halogen Free

General Description

The FP5451A is a dual channel PWM buck controller with short circuit protection (SCP) and adjustable maximum duty control (DTC) function. It includes one 2.5V precision voltage reference regulator, two error amplifiers, PWM control circuits, totem-pole output stages and under voltage lockout circuit (UVLO). It offers space and low cost in many applications such as the DC / DC converters and backlight inverters.

Using FP5451A, it is easy to complete a power conversion regulator design with few external components. The circuit diagram of the typical application example is as below.

Features

- Wide Operating Voltage Range: 4~40V
- Feedback Reference Voltage: 2.5V
- Reference Voltage Precision: 1%
- Output Sink Current up to 100mA
- Oscillator Frequency: Max. 500KHz
- Low Quiescent Supply Current
- Variable Duty Control (DTC)
- UVLO Protection Function
- SCP Protection Function (Typ. 1.3V)
- Package: SOP-16L / SSOP-16L

Applications

- Dual Output Switch Regulator
- Backlight Inverter
- LCD Monitor

This datasheet contains new product information. Feeling Technology reserves the rights to modify the product specification without notice. No liability is assumed as a result of the use of this product. No rights under any patent accompany the sales of the product.

Function Block Diagram

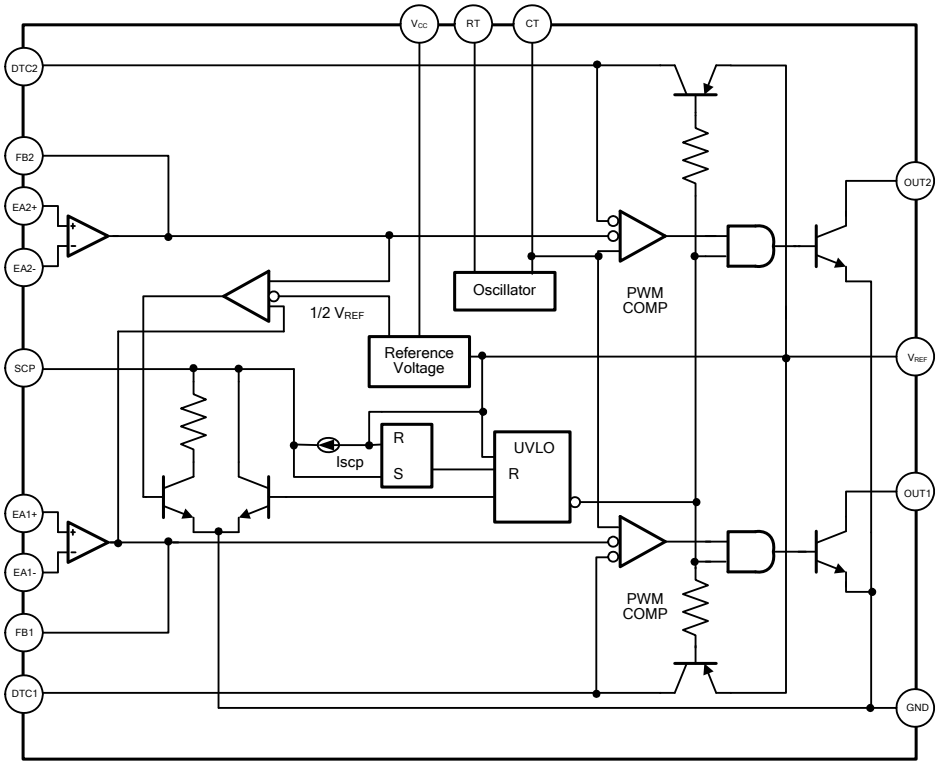

This datasheet contains new product information. Feeling Technology reserves the rights to modify the product specification without notice.
No liability is assumed as a result of the use of this product. No rights under any patent accompany the sales of the product.

Pin Descriptions

SOP-16L

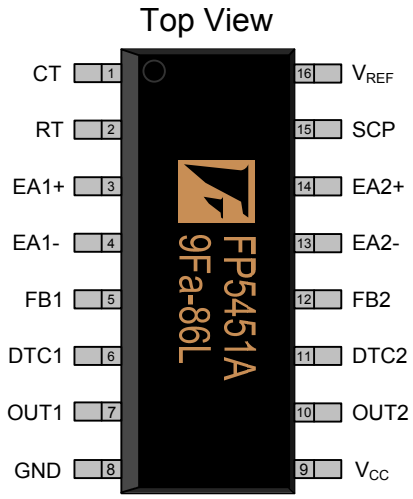

Name	No.	I / O	Description
CT	1	I	Connect a Capacitor for Oscillator Frequency Adjustment
RT	2	I	Connect a Resistor for Oscillator Frequency Adjustment
EA1+	3	I	Output 1 Error Amplifier Non-inverting Input
EA1-	4	I	Output 1 Error Amplifier Inverting Input
FB1	5	O	Output 1 Error Amplifier Output
DTC1	6	I	Output 1 Maximum Duty Control Voltage
OUT1	7	O	Output 1 Totem-pole Output
GND	8	P	IC Ground
V_{CC}	9	P	IC Power Supply
OUT2	10	O	Output 2 Totem-pole Output
DTC2	11	I	Output 2 Dead-Time Comparator
FB2	12	O	Output 2 Error Amplifier Output
EA2-	13	I	Output 2 Error Amplifier Inverting Input
EA2+	14	I	Output 2 Error Amplifier Non-inverting Input
SCP	15	I	Connect a Capacitor to Set Short Circuit Protection Timing
V_{REF}	16	O	2.5V Reference Voltage Output

SSOP-16L

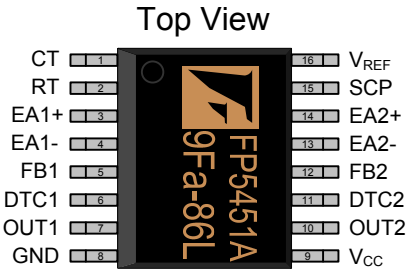

Name	No.	I / O	Description
CT	1	I	Connect a Capacitor for Oscillator Frequency Adjustment
RT	2	I	Connect a Resistor for Oscillator Frequency Adjustment
EA1+	3	I	Output 1 Error Amplifier Non-inverting Input
EA1-	4	I	Output 1 Error Amplifier Inverting Input
FB1	5	O	Output 1 Error Amplifier Output
DTC1	6	I	Output 1 Maximum Duty Control Voltage
OUT1	7	O	Output 1 Totem-pole Output
GND	8	P	IC Ground
V_{CC}	9	P	IC Power Supply
OUT2	10	O	Output 2 Totem-pole Output
DTC2	11	I	Output 2 Dead-Time Comparator
FB2	12	O	Output 2 Error Amplifier Output
EA2-	13	I	Output 2 Error Amplifier Inverting Input
EA2+	14	I	Output 2 Error Amplifier Non-inverting Input
SCP	15	I	Connect a Capacitor to Set Short Circuit Protection Timing
V_{REF}	16	O	2.5V Reference Voltage Output

This datasheet contains new product information. Feeling Technology reserves the rights to modify the product specification without notice.
No liability is assumed as a result of the use of this product. No rights under any patent accompany the sales of the product.

Marking Information

SOP-16L

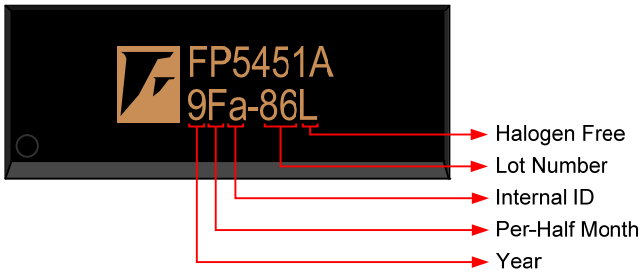

SSOP-16L

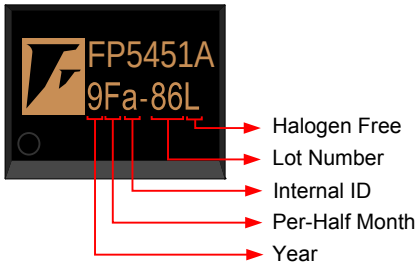

Halogen Free: Halogen free product indicator

Lot Number: Wafer lot number's last two digits

For Example: 132386TB → 86

Internal ID: Internal Identification Code

Per-Half Month: Production period indicated in half month time unit

For Example: January → A (Front Half Month), B (Last Half Month)

February → C (Front Half Month), D (Last Half Month)

Year: Production year's last digit

This datasheet contains new product information. Feeling Technology reserves the rights to modify the product specification without notice.
No liability is assumed as a result of the use of this product. No rights under any patent accompany the sales of the product.

Ordering Information

Part Number	Operating Temperature	Package	MOQ	Description
FP5451ADR-LF	-20°C ~ +85°C	SOP-16L	2500EA	Tape & Reel
FP5451ARR-LF	-20°C ~ +85°C	SSOP-16L	2500EA	Tape & Reel

Absolute Maximum Ratings

Parameter	Symbol	Conditions	Min.	Typ.	Max.	Unit
Power Supply Voltage	V_{CC}				40	V
Differential Input Voltage	V_{ID}				20	V
Collector Output Voltage	V_O				40	V
Collector Output Voltage	I_O				150	mA
Maximum Junction Temperature	T_j				+150	°C
Thermal Resistance Junction to Ambient	θ_{JA}	SOP-16L			+90	°C / W
		SSOP-16L			+110	°C / W
Thermal Resistance Junction to Case	θ_{JC}	SOP-16L			+45	°C / W
		SSOP-16L			+55	°C / W
Power Dissipation	P_D	SOP-16L, T_A= +25°C			650	mW
		SSOP-16L, T_A= +25°C			450	mW
Storage Temperature Range			-65		+150	°C
Lead Temperature (soldering, 10 sec)					+260	°C

Suggested IR Re-flow Soldering Curve

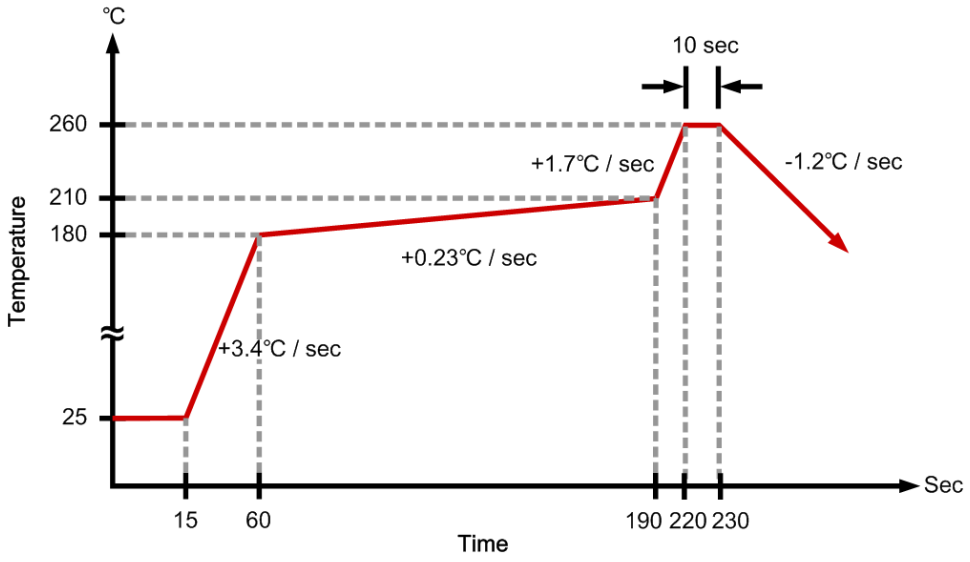

This datasheet contains new product information. Feeling Technology reserves the rights to modify the product specification without notice.
No liability is assumed as a result of the use of this product. No rights under any patent accompany the sales of the product.

Recommended Operating Conditions

Parameter	Symbol	Conditions	Min.	Typ.	Max.	Unit
Supply Voltage			4		40	V
Operating Temperature			-20		+85	℃

DC Electrical Characteristics (V_{CC}= 6V, f=270kHz, unless otherwise noted)

Parameter	Symbol	Test Conditions	Min.	Typ.	Max.	Unit
Reference Section						
Output Voltage (pin 16)	V_{REF}	I_O=1mA	2.45	2.5	2.55	V
Output Voltage Change with Temperature		T_A=-20℃ to +25℃		-0.1	±1	%
		T_A=+25℃ to +85℃		-0.2	±1	%
Input Voltage Regulation	$\triangle V_{REF}$ / V_{REF}	V_{CC}=3.6V～40V		1	12.5	mV
Output Voltage Regulation	$\triangle V_{REF}$ / V_{REF}	Io = 0.1mA to 1 mA		1	7.5	mV
Short-circuit Output Current	I_{SHORT}	V_O=0	3	10	30	mA
Under Voltage Lockout Section						
Upper Threshold Voltage (V_{CC})	V_{UPPER}	$I_{O\ (REF)}$ = 0.1 mA, T_A=25℃		2.8		V
Lower Threshold Voltage (V_{CC})	V_{LOW}			2.6		V
Hysteresis (V_{CC})	V_{HYS}		80	120		mV
Reset Threshold Voltage (V_{CC})	V_{RESET}		1.5	1.9		V
Short-circuit Protection Control Section						
Input Threshold Voltage (SCP)	V_{TH}	T_A= 25℃	1.2	1.3	1.5	V
Standby Voltage (SCP)	$V_{STANDBY}$	No Pull-up	60	80	100	mV
Latched Input Voltage (SCP)	V_{LATCH}	No Pull-up		40	60	mV
Input (Source) Current	I_{SOURCE}	V_I=0.7V, T_A=25℃	-1.5	-2	-2.5	μA
Comparator Threshold Voltage (Feedback)	$V_{COMP\ (TH)}$			1.20		V
Oscillator Section						
Frequency	f	C_T=330pF, R_T=10K		270		KH_Z
Standard Deviation of Frequency	$\triangle$f	C_T=330pF, R_T=10K		10		%
Frequency Change with Voltage	$\triangle$f / $\triangle$V	V_{CC}=3.6V to 40V		1		%
Frequency Change with Temperature	$\triangle$f / $\triangle$T	T_A=-20℃ to 25℃		-0.4	±2	%
		T_A=25℃ to 85℃		-0.2	±2	%
Duty Control Section						
Input Bias current (DTC)	I_{BIAS}				1	μA
Latch Mode (Source) Current (DTC)	I_{SOURCE}	T_A=25℃	-80	-200		μA
Latched Input Voltage (DTC)	V_{LATCH}	I_O=40μA	2.3			V
Input Threshold Voltage at f=10KHz (DTC)	V_{TH}	Zero Duty Cycle		2.05	2.25	V
		Maximum Duty Cycle	1.2	1.45		V

This datasheet contains new product information. Feeling Technology reserves the rights to modify the product specification without notice.
No liability is assumed as a result of the use of this product. No rights under any patent accompany the sales of the product.

Parameter	Symbol	Test Conditions	Min.	Typ.	Max.	Unit
Error Amplifier Section						
Input Offset Voltage	V_{IO}	Vo (Feedback)=1.25V	-6		+6	mV
Input Offset Current	I_{IO}	Vo (Feedback)=1.25V	-100		+100	nA
Input Bias Current	I_{BIAS}	Vo (Feedback)=1.25V		160	500	nA
Common Mode Input Voltage Range	V_{ICM}	V_{CC}=3.6V to 40 V	0.3		1.6	V
Open Loop Voltage Amplification	A_{VO}	R_F=200KΩ	70	80		dB
Unity Gain Bandwidth	BW			1.5		MH_Z
Common Mode Rejection Ratio	CMRR		60	80		dB
Positive Output Voltage Swing	V_{POS}		Vref-0.2			V
Negative Output Voltage Swing	V_{NEG}				1	V
Output (Sink) Current (Feedback)	I_{SINK}	V_{ID}= -0.1V, V_O=1.25V	1	5.0		mA
Output (Source) Current (Feedback)	I_{SOURCE}	V_{ID}=0.1V, V_O=1.25V	-90	-140		μA
Output Section						
Collector Off State Current	I_{OFF}	V_O=50V			10	μA
Output Saturation Voltage	V_{SAT}	I_O=10mA		0.7	1	V
Short Circuit Output Current	I_{SC}	V_O=6V		150		mA
PWM Comparator Section						
Input Threshold Voltage at f=10kHz (Feedback)	V_{TH}	Zero Duty Cycle		2.05	2.25	V
		Maximum Duty Cycle	1.2	1.45		V
Total Device						
Standby Supply Current	$I_{STANDBY}$	Off State		1.3	1.8	mA
Average Supply Current	I_{AVE}	R_T=10K		1.7	2.4	mA

This datasheet contains new product information. Feeling Technology reserves the rights to modify the product specification without notice.
No liability is assumed as a result of the use of this product. No rights under any patent accompany the sales of the product.

Timing Waveform

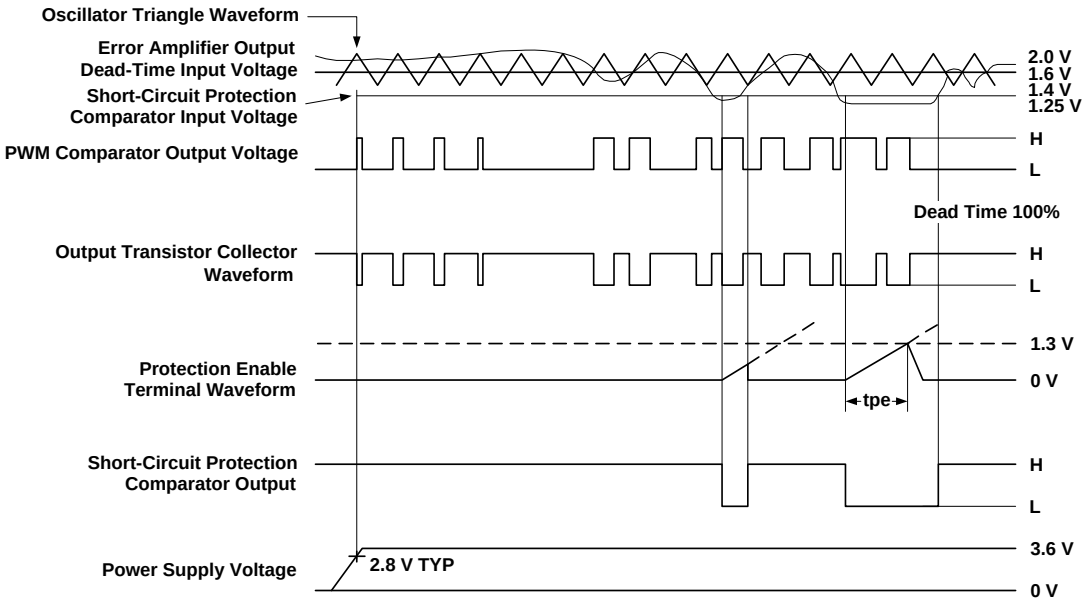

Protection Enable Time, tpe = (0.658 * 10E6 * Cpe) in seconds

FP5451A Timing Diagram

Application Information

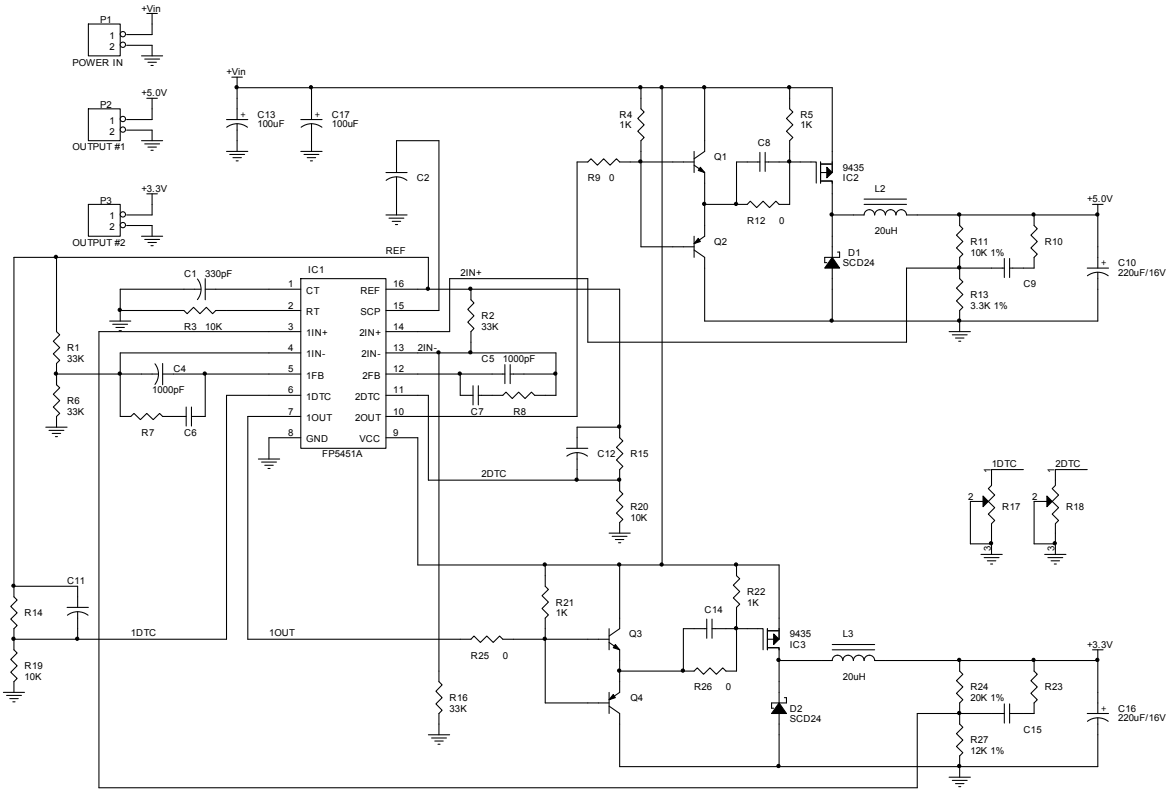

This datasheet contains new product information. Feeling Technology reserves the rights to modify the product specification without notice.
No liability is assumed as a result of the use of this product. No rights under any patent accompany the sales of the product.

Typical Operating Characteristics

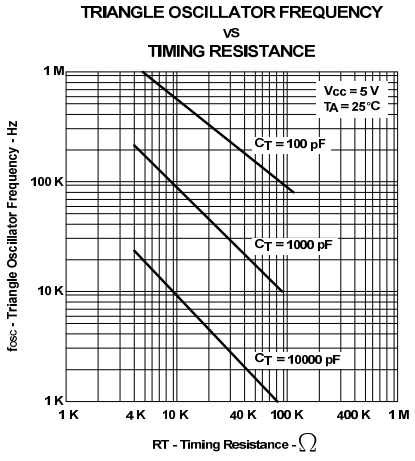

Figure 1

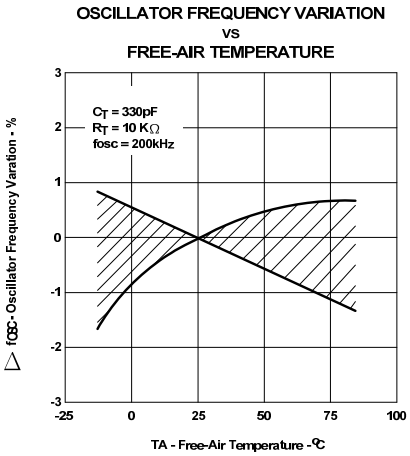

Figure 2

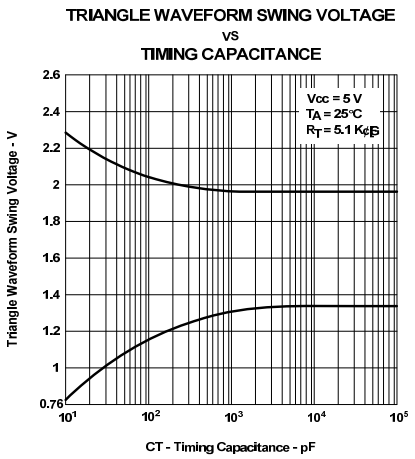

Figure 3

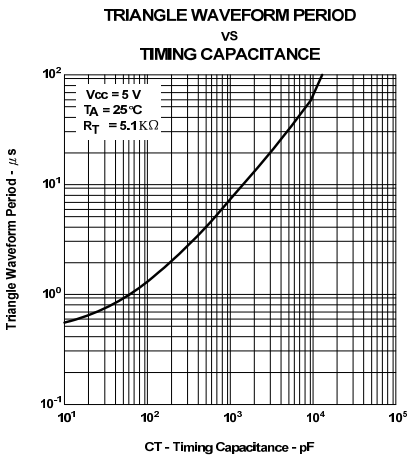

Figure 4

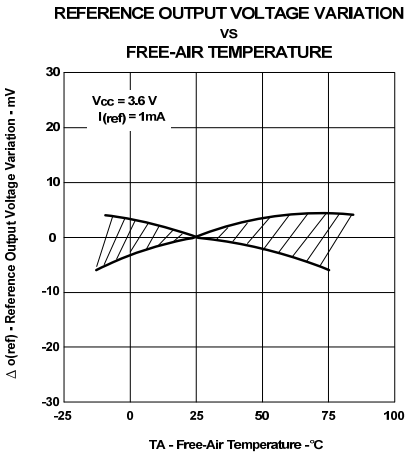

Figure 5

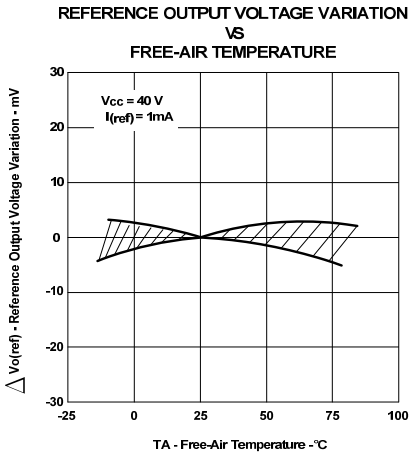

Figure 6

This datasheet contains new product information. Feeling Technology reserves the rights to modify the product specification without notice.
No liability is assumed as a result of the use of this product. No rights under any patent accompany the sales of the product.

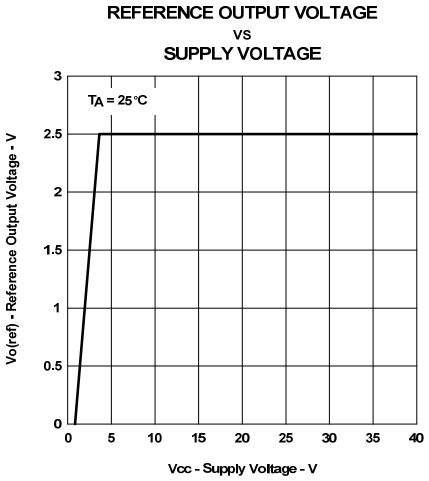

Figure 7

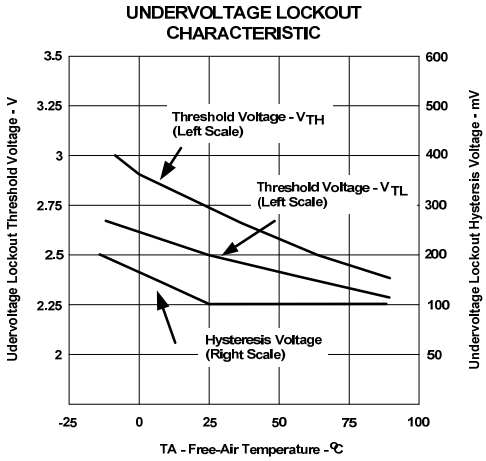

Figure 8

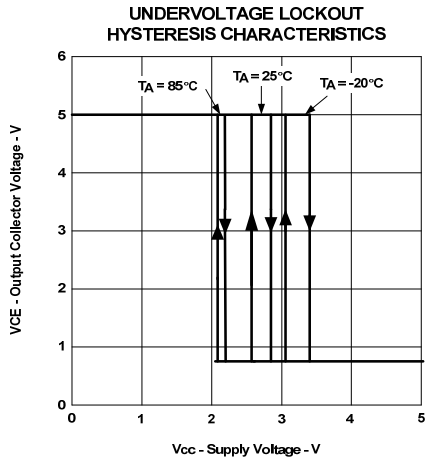

Figure 9

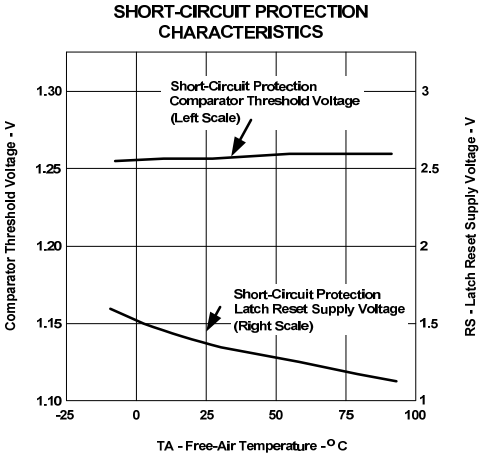

Figure 10

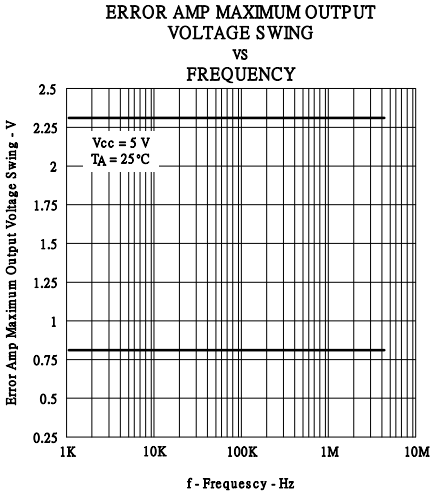

Figure 11

This datasheet contains new product information. Feeling Technology reserves the rights to modify the product specification without notice.
No liability is assumed as a result of the use of this product. No rights under any patent accompany the sales of the product.

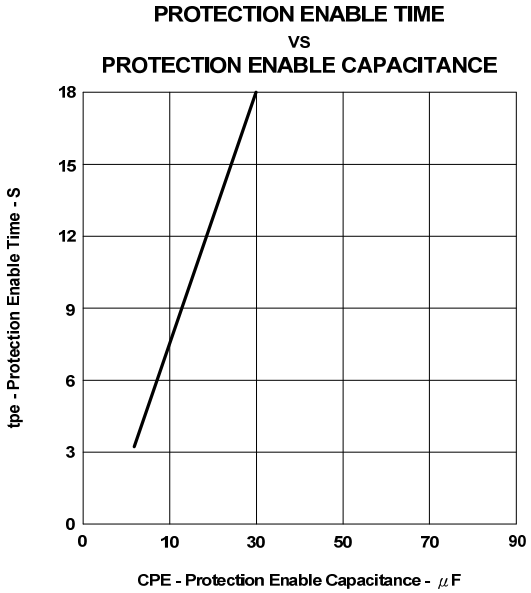

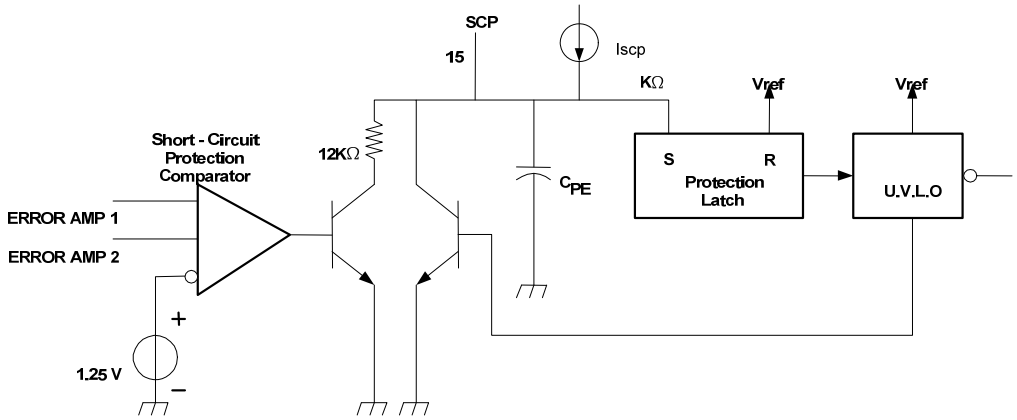

Figure 12

This datasheet contains new product information. Feeling Technology reserves the rights to modify the product specification without notice.
No liability is assumed as a result of the use of this product. No rights under any patent accompany the sales of the product.

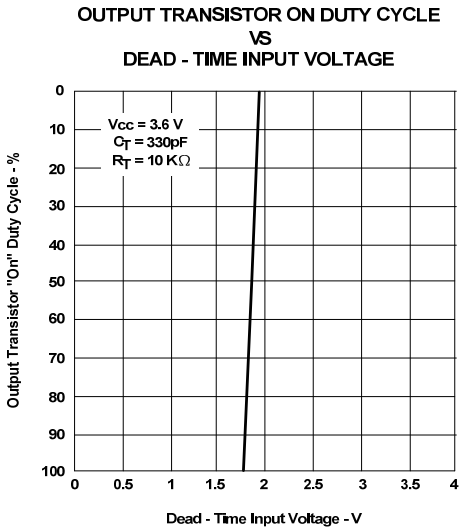

Figure 13

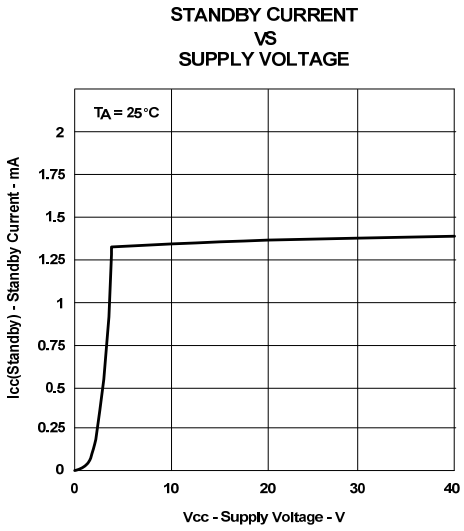

Figure 14

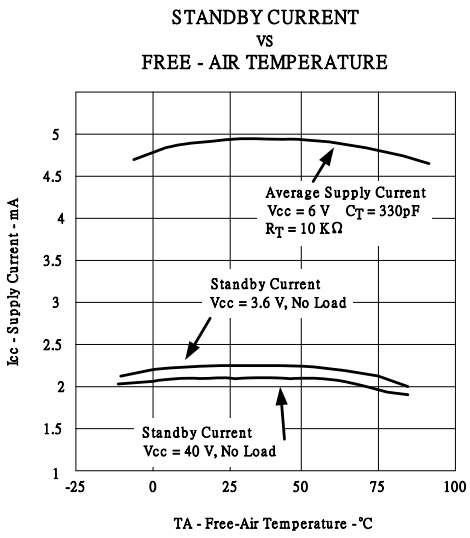

Figure 15

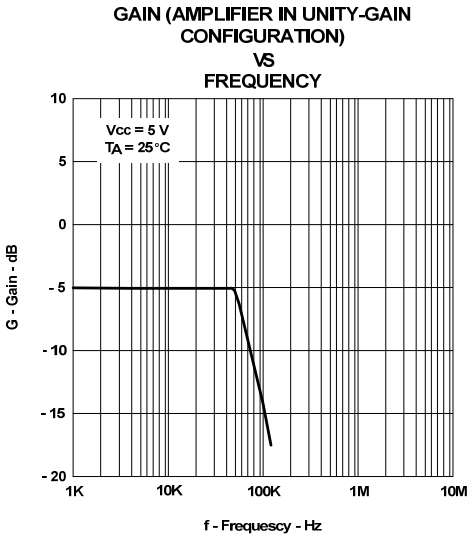

Figure 16

This datasheet contains new product information. Feeling Technology reserves the rights to modify the product specification without notice.
No liability is assumed as a result of the use of this product. No rights under any patent accompany the sales of the product.

Package Outline

SOP-16L

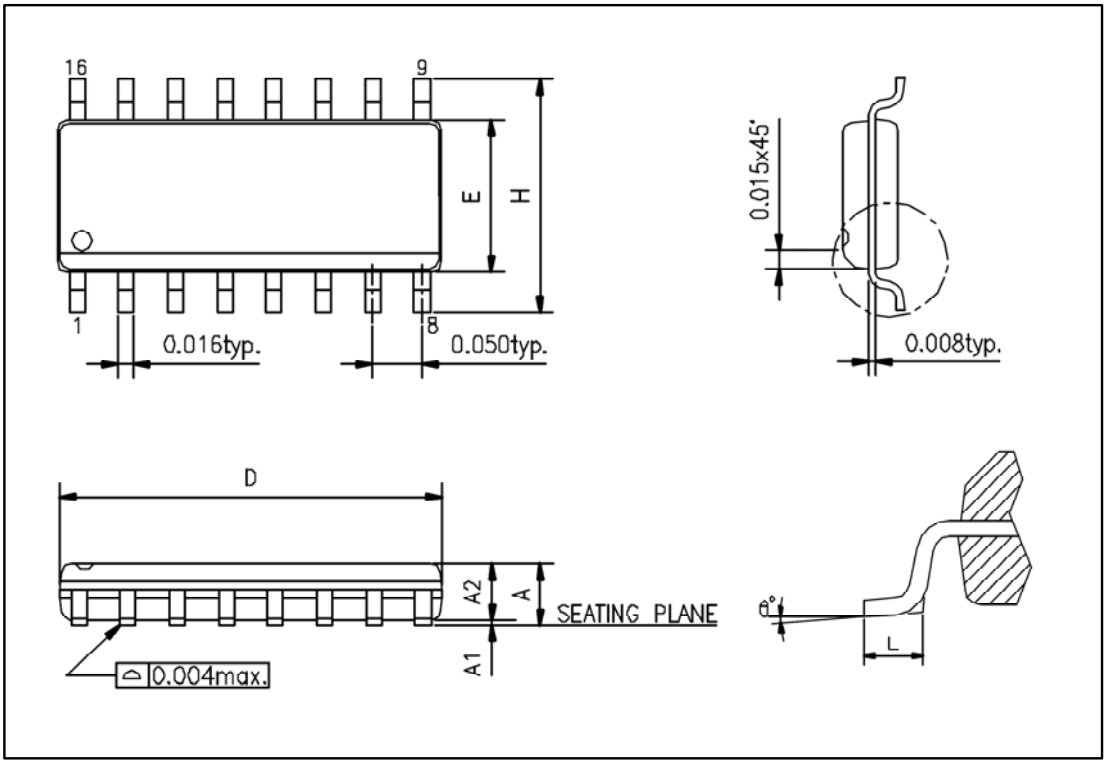

UNIT: mm

Symbols	Min. (mm)	Max. (mm)
A	1.346	1.752
A1	0.101	0.254
A2	1.244	1.651
D	9.804	10.007
E	3.810	3.987
H	5.791	6.197
L	0.406	1.270
θ°	0°	8°

Note:

1. Package dimensions are in compliance with JEDEC outline: MS-012 AC.
2. Dimension “D” does not include molding flash, protrusions or gate burrs.
3. Dimension “E” does not include inter-lead flash or protrusions.

This datasheet contains new product information. Feeling Technology reserves the rights to modify the product specification without notice.
No liability is assumed as a result of the use of this product. No rights under any patent accompany the sales of the product.

SSOP-16L (EP)

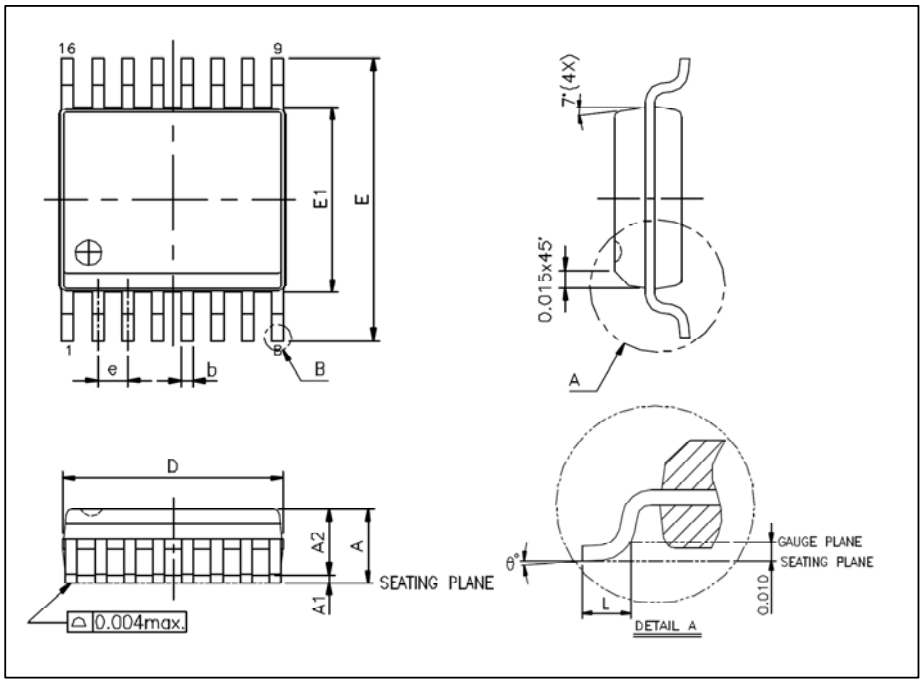

UNIT: mm

Symbols	Min. (mm)	Max. (mm)
A	1.346	1.752
A1	0.101	0.254
A2		1.498
b	0.203	0.304
b1	0.203	0.279
c	0.177	0.254
c1	0.177	0.228
D	4.800	5.003
E1	3.810	3.987
E	5.791	6.197
L	0.406	1.270
e	0.635 BASIC	
θ°	0°	8°

Note:

1. Package dimensions are in compliance with JEDEC outline: MO-137 AB.
2. Dimension “D” does not include molding flash, protrusions or gate burrs.
3. Dimension “E” does not include inter-lead flash or protrusions.

This datasheet contains new product information. Feeling Technology reserves the rights to modify the product specification without notice.
No liability is assumed as a result of the use of this product. No rights under any patent accompany the sales of the product.