# LISA2-WW-PIN

**~45° wide beam optimized for Osram Oslon SSL 80. 7.0 mm high variant with location pin installation.**



## TECHNICAL SPECIFICATIONS:

| | |
|---|---|
| Dimensions | Ø 9.9 mm |
| Height | 7 mm |
| Fastening | glue, pin |
| Colour | black |
| Box size | |
| Box weight | 0 kg |
| Quantity in Box | pcs |
| ROHS compliant | yes |

## MATERIAL SPECIFICATIONS:

| Component | Type | Material | Colour |
|---|---|---|---|
| LISA2-WW | Lens | PMMA | clear |
| LISA2-HLD-PIN-OSL | Holder | PC | black |


LEDiL is a registered trademark of LEDiL Oy in the European Union, USA, and certain other countries.

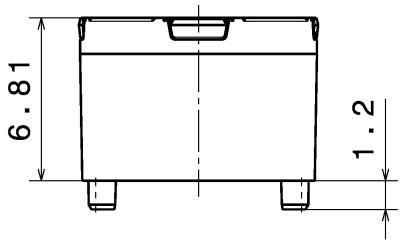


Front view

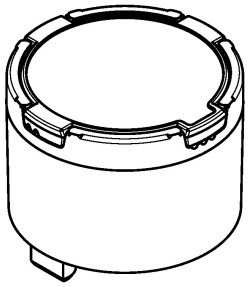

Isometric view
Scale: 4:1

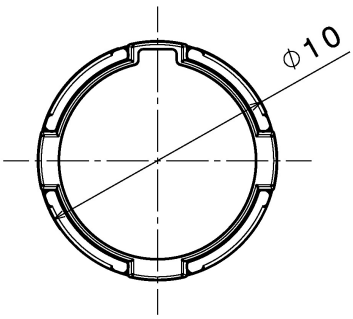


Top view

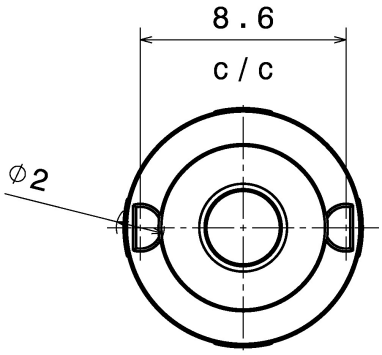


Bottom view

| INDEX | PART NO | DESCRIPTION | MATERIAL | COLOUR |
|---|---|---|---|---|
| 1 | F10991 | LISA2-HLD-PIN-OSL | PC | black |
| 2 | - | LISA2 lens | PMMA | |

Tolerances if not otherwise shown
According to DIN ISO 2768-1
Linear measures:
Up to 30mm class M, otherwise class C.
According to DIN ISO 2768-2
Form and position: class L

Ledil Oy
Salorankatu 10
FIN 24240 SALO
Finland

THIRD ANGLE PROJECTION:

DRAWING TITLE
LISA2-PIN-OSL series

This drawing is the property of LEDiL Oy. It may not be reproduced, copied or communicated without a written agreement with LEDiL Oy.

SIZE A4 | PART NUMBER -

SCALE 4:1 | WEIGHT 0,5 g | SHEET 1/1


LEDiL is a registered trademark of LEDiL Oy in the European Union, USA, and certain other countries.

## PHOTOMETRIC DATA (MEASURED):

OSRAM
Opto Semiconductors

| | |
|---|---|
| LED | Oslon Square EC |
| FWHM | 48.0° |
| Efficiency | 89 % |
| Peak intensity | 0.870 cd/lm |
| Required components: | |



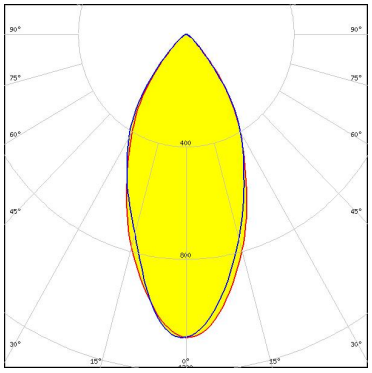

OSRAM
Opto Semiconductors

| | |
|---|---|
| LED | Oslon SSL 150 |
| FWHM | 45.0° |
| Efficiency | 91 % |
| Peak intensity | 1.200 cd/lm |
| Required components: | |

OSRAM
Opto Semiconductors

| | |
|---|---|
| LED | Oslon SSL 80 |
| FWHM | 40.0° |
| Efficiency | 87 % |
| Peak intensity | 1.340 cd/lm |
| Required components: | |



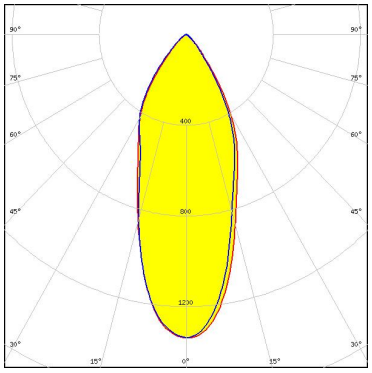


LEDiL is a registered trademark of LEDiL Oy in the European Union, USA, and certain other countries.

## PHOTOMETRIC DATA (SIMULATED):

OSRAM
Opto Semiconductors

| | |
|---|---|
| LED | SFH 4770S |
| FWHM | 36.0° |
| Efficiency | 96 % |
| Peak intensity | cd/lm |
| Required components: | |

OSRAM
Opto Semiconductors

| | |
|---|---|
| LED | Synios P2720 1 mm |
| FWHM | 43.0° |
| Efficiency | 93 % |
| Peak intensity | 1.920 cd/lm |
| Required components: | |

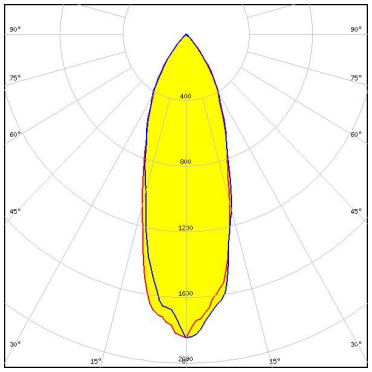


LEDiL is a registered trademark of LEDiL Oy in the European Union, USA, and certain other countries.

## GENERAL INFORMATION:

NOTE: The typical beam angle will be changed by different color, chip size and chip position tolerance. The typical total beam angle is the full angle measured where the luminous intensity is half of the peak value.

## MATERIALS:

As part of our continuous research and improvement processes, and to ensure the best possible quality and availability of our products, LEDiL reserves the right to change material grades without notice.

## PRODUCT DATA USER AGREEMENT AND DISCLAIMER:

The measured data in the provided downloadable LEDiL Product Datasheets and Mechanical 2D-Drawings is rounded and provided as reference for planning. LEDiL Oy's optical specifications have been verified by conducting performance testing of the products in accordance with the company's quality system. The reported data are averaged results of multiple measurements with typical variation. LEDiL Oy reserves the right to without prior notification make changes and improvements to its products.

LEDiL Oy assumes neither warranty, nor guarantee nor any other liability of any kind for the contents and correctness of the provided data. The provided data has been generated with highest diligence but the provided data may in reality not represent the complete possible variation range of all intrinsic parameters. Therefore, in certain cases a deviation from the provided data could occur.

LEDiL Oy reserves the right to undertake technical changes of its products without further notification which could lead to changes in the provided data. LEDiL Oy assumes no liability of any kind for the possible deviation from any provided data or any other damage resulting from the usage of the provided data.

The user agrees to this disclaimer and user agreement with the download or usage of the provided files.

**LEDiL Oy**
Joensuunkatu 13
FI-24240 SALO
Finland

**LEDiL Inc.**
228 West Page Street
Suite D
Sycamore IL 60178
USA

**Local sales and technical support**
www.ledil.com/
where_to_buy

**Shipping locations**
Salo, Finland
Hong Kong, China

**Distribution Partners**
www.ledil.com/
where_to_buy


LEDiL is a registered trademark of LEDiL Oy in the European Union, USA, and certain other countries.