FAIRCHILD SEMICONDUCTOR®

January 2010

Motion-SPM™

FNA41060
Smart Power Module

Features

- 600V-10A 3-phase IGBT inverter bridge including control ICs for gate driving and protection
- Easy PCB layout due to built-in bootstrap diode and V_S output
- Divided negative dc-link terminals for inverter current sensing applications
- Single-grounded power supply due to built-in HVIC
- Built-in thermistor for over-temperature monitoring
- Isolation rating of 2000Vrms/min.

Applications

- AC 100V ~ 253V three-phase inverter drive for small power ac motor drives
- Home appliances applications like air conditioner and refrigerator

General Description

It is an advanced motion-smart power module (Motion-SPM™) that Fairchild has newly developed and designed to provide very compact and high performance ac motor drives mainly targeting low-power inverter-driven application like air conditioner and refrigerator. It combines optimized circuit protection and drive matched to low-loss IGBTs. System reliability is further enhanced by the integrated under-voltage lock-out protection, short-circuit protection, and temperature monitoring. The high speed built-in HVIC provides opto-coupler-less single-supply IGBT gate driving capability that further reduce the overall size of the inverter system design. Each phase current of inverter can be monitored separately due to the divided negative dc terminals.

Additional Information

For further infomation, please see AN-9070 and FEB305-001 in http://www.fairchildsemi.com

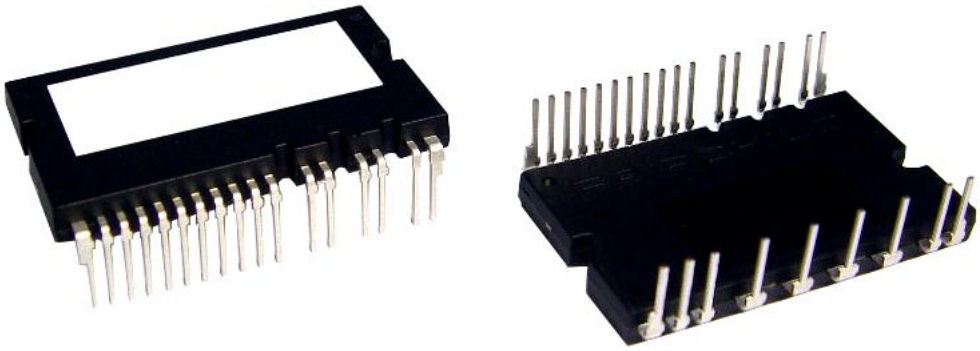

Figure 1.

©2010 Fairchild Semiconductor Corporation

Integrated Power Functions

- 600V-10A IGBT inverter for three-phase DC/AC power conversion (Please refer to Figure 3)

Integrated Drive, Protection and System Control Functions

- For inverter high-side IGBTs: Gate drive circuit, High voltage isolated high-speed level shifting
  Control circuit under-voltage (UV) protection
- For inverter low-side IGBTs: Gate drive circuit, Short circuit protection (SC)
  Control supply circuit under-voltage (UV) protection
- Fault signaling: Corresponding to UV (Low-side supply) and SC faults
- Input interface: 3.3/5V CMOS compatible, Schmitt trigger input

Pin Configuration

Top View

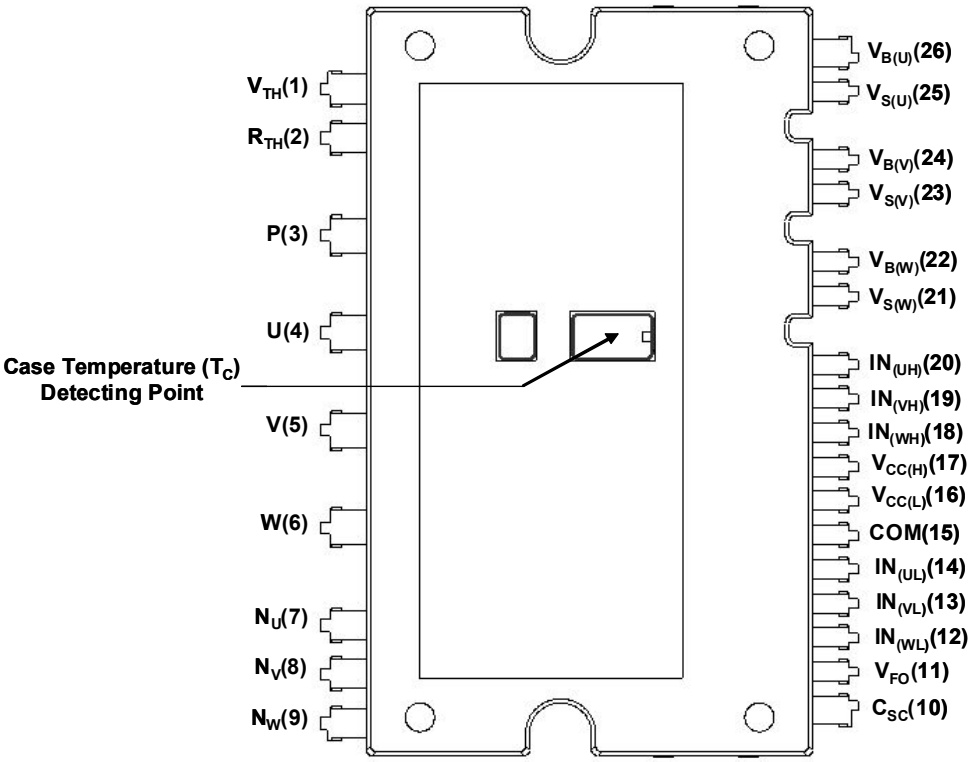

Figure 2.

Pin Descriptions

Pin Number	Pin Name	Pin Description
1	V_{TH}	Thermistor Bias Voltage
2	R_{TH}	Series Resistor for the Use of Thermistor (Temperature Detection)
3	P	Positive DC–Link Input
4	U	Output for U Phase
5	V	Output for V Phase
6	W	Output for W Phase
7	N_U	Negative DC–Link Input for U Phase
8	N_V	Negative DC–Link Input for V Phase
9	N_W	Negative DC–Link Input for W Phase
10	C_{SC}	Capacitor (Low-pass Filter) for Short-Current Detection Input
11	V_{FO}	Fault Output
12	$IN_{(WL)}$	Signal Input for Low-side W Phase
13	$IN_{(VL)}$	Signal Input for Low-side V Phase
14	$IN_{(UL)}$	Signal Input for Low-side U Phase
15	COM	Common Supply Ground
16	$V_{CC(L)}$	Low-Side Common Bias Voltage for IC and IGBTs Driving
17	$V_{CC(H)}$	High-Side Common Bias Voltage for IC and IGBTs Driving
18	$IN_{(WH)}$	Signal Input for High-side W Phase
19	$IN_{(VH)}$	Signal Input for High-side V Phase
20	$IN_{(UH)}$	Signal Input for High-side U Phase
21	$V_{S(W)}$	High-side Bias Voltage Ground for W Phase IGBT Driving
22	$V_{B(W)}$	High-side Bias Voltage for W Phase IGBT Driving
23	$V_{S(V)}$	High-side Bias Voltage Ground for V Phase IGBT Driving
24	$V_{B(V)}$	High-side Bias Voltage for V Phase IGBT Driving
25	$V_{S(U)}$	High-side Bias Voltage Ground for U Phase IGBT Driving
26	$V_{B(U)}$	High-side Bias Voltage for U Phase IGBT Driving

Internal Equivalent Circuit and Input/Output Pins

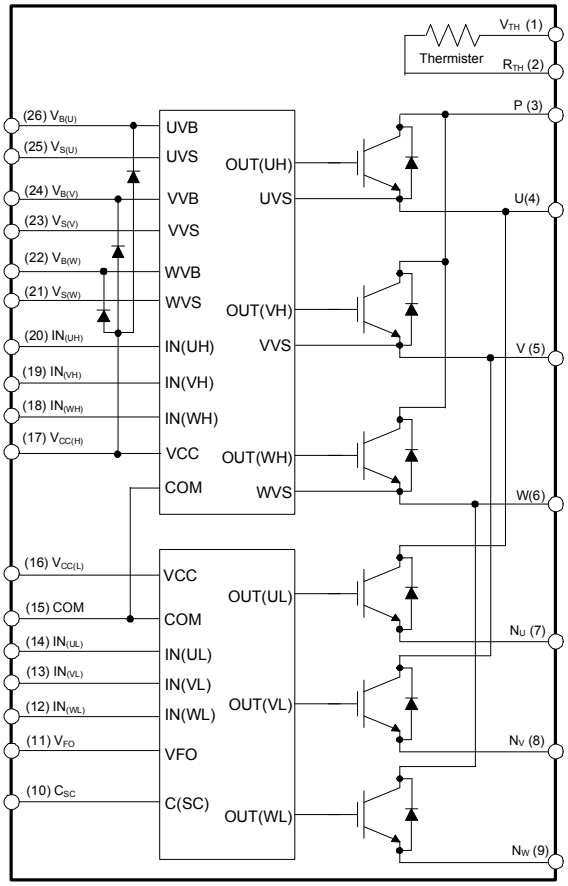

Note:

1) Inverter high-side is composed of three IGBTs, freewheeling diodes and one control IC for each IGBT.

2) Inverter low-side is composed of three IGBTs, freewheeling diodes and one control IC for each IGBT. It has gate drive and protection functions.

3) Inverter power side is composed of four inverter dc-link input terminals and three inverter output terminals.

Figure 3.

Absolute Maximum Ratings (T_J = 25°C, Unless Otherwise Specified)

Inverter Part

Symbol	Parameter	Conditions	Rating	Units
V_{PN}	Supply Voltage	Applied between P- N_U, N_V, N_W	450	V
$V_{PN(Surge)}$	Supply Voltage (Surge)	Applied between P- N_U, N_V, N_W	500	V
V_{CES}	Collector-emitter Voltage		600	V
± I_C	Each IGBT Collector Current	T_C = 25°C, T_J < 150°C	10	A
± I_{CP}	Each IGBT Collector Current (Peak)	T_C = 25°C, T_J < 150°C, Under 1ms Pulse Width	20	A
P_C	Collector Dissipation	T_C = 25°C per One Chip	34	W
T_J	Operating Junction Temperature	(Note 1)	-40 ~ 150	°C

Note:

1. The maximum junction temperature rating of the power chips integrated within the SPM is 150°C.

Control Part

Symbol	Parameter	Conditions	Rating	Units
V_{CC}	Control Supply Voltage	Applied between $V_{CC(H)}$, $V_{CC(L)}$ - COM	20	V
V_{BS}	High-side Control Bias Voltage	Applied between $V_{B(U)}$ - $V_{S(U)}$, $V_{B(V)}$ - $V_{S(V)}$, $V_{B(W)}$ - $V_{S(W)}$	20	V
V_{IN}	Input Signal Voltage	Applied between $IN_{(UH)}$, $IN_{(VH)}$, $IN_{(WH)}$, $IN_{(UL)}$, $IN_{(VL)}$, $IN_{(WL)}$ - COM	-0.3~V_{CC}+0.3	V
V_{FO}	Fault Output Supply Voltage	Applied between V_{FO} - COM	-0.3~V_{CC}+0.3	V
I_{FO}	Fault Output Current	Sink Current at V_{FO} Pin	1	mA
V_{SC}	Current Sensing Input Voltage	Applied between C_{SC} - COM	-0.3~V_{CC}+0.3	V

Bootstrap Diode Part

Symbol	Parameter	Conditions	Rating	Units
V_{RRM}	Maximum Repetitive Reverse Voltage		600	V
I_F	Forward Current	T_C = 25°C	0.5	A
I_{FP}	Forward Current (Peak)	T_C = 25°C, Under 1ms Pulse Width	1	A
T_J	Operating Junction Temperature		-40 ~ 150	°C

Total System

Symbol	Parameter	Conditions	Rating	Units
$V_{PN(PROT)}$	Self Protection Supply Voltage Limit (Short Circuit Protection Capability)	V_{CC} = V_{BS} = 13.5 ~ 16.5V T_J = 150°C, Non-repetitive, less than 2μs	400	V
T_{STG}	Storage Temperature		-40 ~ 125	°C
V_{ISO}	Isolation Voltage	60Hz, Sinusoidal, AC 1 minute, Connection Pins to heat sink plate	2000	V_{rms}

Thermal Resistance

Symbol	Parameter	Conditions	Min.	Typ.	Max.	Units
$R_{th(j-c)Q}$	Junction to Case Thermal Resistance	Inverter IGBT part (per 1/6 module)	-	-	3.6	°C/W
$R_{th(j-c)F}$		Inverter FWD part (per 1/6 module)	-	-	4.8	°C/W

Note:

2. For the measurement point of case temperature(T_C), please refer to Figure 2.

Electrical Characteristics (T_J = 25°C, Unless Otherwise Specified)

Inverter Part

Symbol		Parameter	Conditions		Min.	Typ.	Max.	Units
$V_{CE(SAT)}$		Collector-Emitter Saturation Voltage	V_{CC} = V_{BS} = 15V V_{IN} = 5V	I_C = 10A, T_J = 25°C	-	1.7	2.2	V
V_F		FWD Forward Voltage	V_{IN} = 0V	I_F = 10A, T_J = 25°C	-	1.8	2.3	V
HS	t_{ON}	Switching Times	V_{PN} = 300V, V_{CC} = V_{BS} = 15V, I_C = 10A T_J = 25°C V_{IN} = 0V ↔ 5V, Inductive Load (Note 3)		0.40	0.70	1.20	µs
	$t_{C(ON)}$				-	0.20	0.45	µs
	t_{OFF}				-	0.75	1.25	µs
	$t_{C(OFF)}$				-	0.25	0.50	µs
	t_{rr}				-	0.15	-	µs
LS	t_{ON}		V_{PN} = 300V, V_{CC} = V_{BS} = 15V, I_C = 10A T_J = 25°C V_{IN} = 0V ↔ 5V, Inductive Load (Note 3)		0.40	0.70	1.20	µs
	$t_{C(ON)}$				-	0.20	0.45	µs
	t_{OFF}				-	0.75	1.25	µs
	$t_{C(OFF)}$				-	0.25	0.50	µs
	t_{rr}				-	0.15	-	µs
I_{CES}		Collector-Emitter Leakage Current	V_{CE} = V_{CES}		-	-	1	mA

Note:

3. t_{ON} and t_{OFF} include the propagation delay time of the internal drive IC. $t_{C(ON)}$ and $t_{C(OFF)}$ are the switching time of IGBT itself under the given gate driving condition internally. For the detailed information, please see Figure 4.

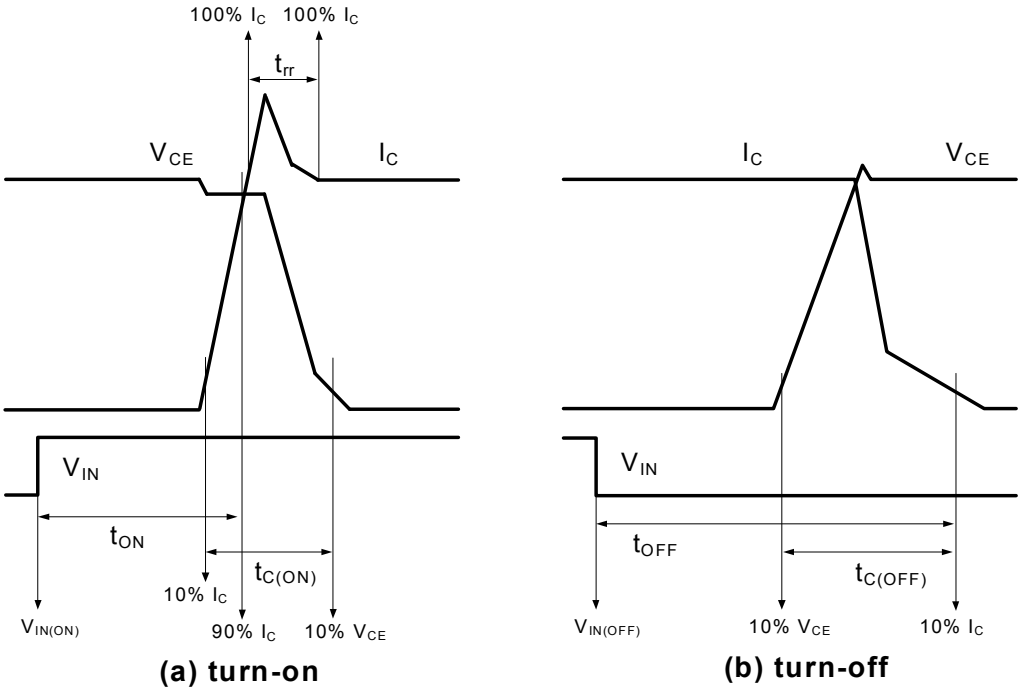

Figure 4. Switching Time Definition

Switching Loss (Typical)

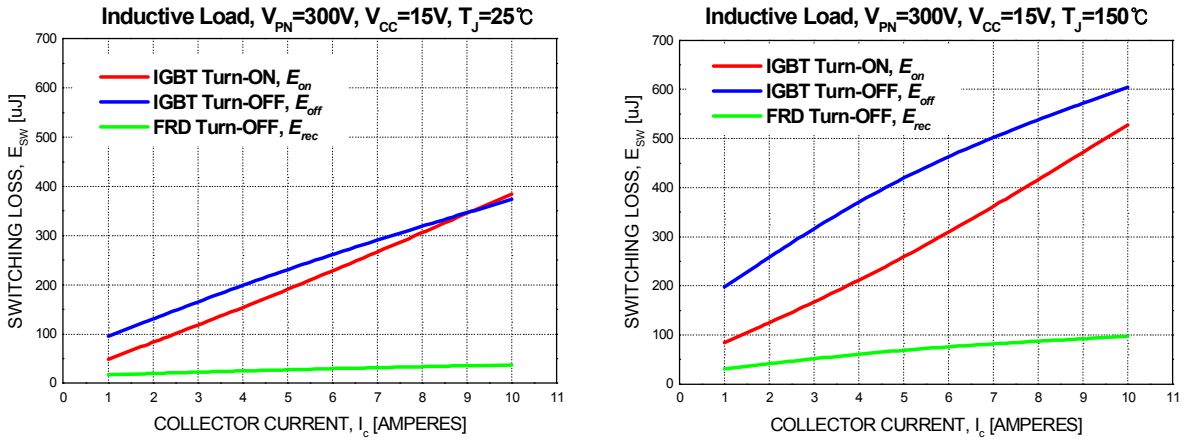

Figure 5. Switching Loss Characteristics

Control Part

Symbol	Parameter	Conditions		Min.	Typ.	Max.	Units
I_{QCCH}	Quiescent V_{CC} Supply Current	$V_{CC(H)}$ = 15V, $IN_{(UH,VH,WH)}$ = 0V	$V_{CC(H)}$ - COM	-	-	0.10	mA
I_{QCCL}		$V_{CC(L)}$ = 15V, $IN_{(UL,VL,WL)}$ = 0V	$V_{CC(L)}$ - COM	-	-	2.65	mA
I_{PCCH}	Operating V_{CC} Supply Current	$V_{CC(H)}$ = 15V, f_{PWM} = 20kHz, duty=50%, applied to one PWM signal input for High-side	$V_{CC(H)}$ - COM	-	-	0.15	mA
I_{PCCL}		$V_{CC(L)}$ = 15V, f_{PWM} = 20kHz, duty=50%, applied to one PWM signal input for Low-side	$V_{CC(L)}$ - COM	-	-	3.65	mA
I_{QBS}	Quiescent V_{BS} Supply Current	V_{BS} = 15V, $IN_{(UH,VH,WH)}$ = 0V	$V_{B(U)}$ - $V_{S(U)}$, $V_{B(V)}$ - $V_{S(V)}$, $V_{B(W)}$ - $V_{S(W)}$	-	-	0.30	mA
I_{PBS}	Operating V_{BS} Supply Current	V_{CC} = V_{BS} = 15V, f_{PWM} = 20kHz, duty=50%, applied to one PWM signal input for High-side	$V_{B(U)}$ - $V_{S(U)}$, $V_{B(V)}$ - $V_{S(V)}$, $V_{B(W)}$ - $V_{S(W)}$	-	-	2.00	mA
V_{FOH}	Fault Output Voltage	V_{SC} = 0V, V_{FO} Circuit: 4.7kΩ to 5V Pull-up		4.5	-	-	V
V_{FOL}		V_{SC} = 1V, V_{FO} Circuit: 4.7kΩ to 5V Pull-up		-	-	0.5	V
$V_{SC(ref)}$	Short Circuit Trip Level	V_{CC} = 15V (Note 4)		0.45	0.5	0.55	V
UV_{CCD}	Supply Circuit Under-Voltage Protection	Detection Level		10.5	-	13.0	V
UV_{CCR}		Reset Level		11.0	-	13.5	V
UV_{BSD}		Detection Level		10.0	-	12.5	V
UV_{BSR}		Reset Level		10.5	-	13.0	V
t_{FOD}	Fault-out Pulse Width			30	-	-	μs
$V_{IN(ON)}$	ON Threshold Voltage	Applied between $IN_{(UH)}$, $IN_{(VH)}$, $IN_{(WH)}$, $IN_{(UL)}$, $IN_{(VL)}$, $IN_{(WL)}$ - COM		-	-	2.6	V
$V_{IN(OFF)}$	OFF Threshold Voltage			0.8	-	-	V
R_{TH}	Resistance of Thermister	@T_{TH}=25°C, (Note 5)		-	47	-	kΩ
		@T_{TH}=100°C		-	2.9	-	kΩ

Note:

4. Short-circuit current protection is functioning only at the low-sides.

5. T_{TH} is the temperature of thermister itselt. To know case temperature (T_C), please make the experiment considering your application.

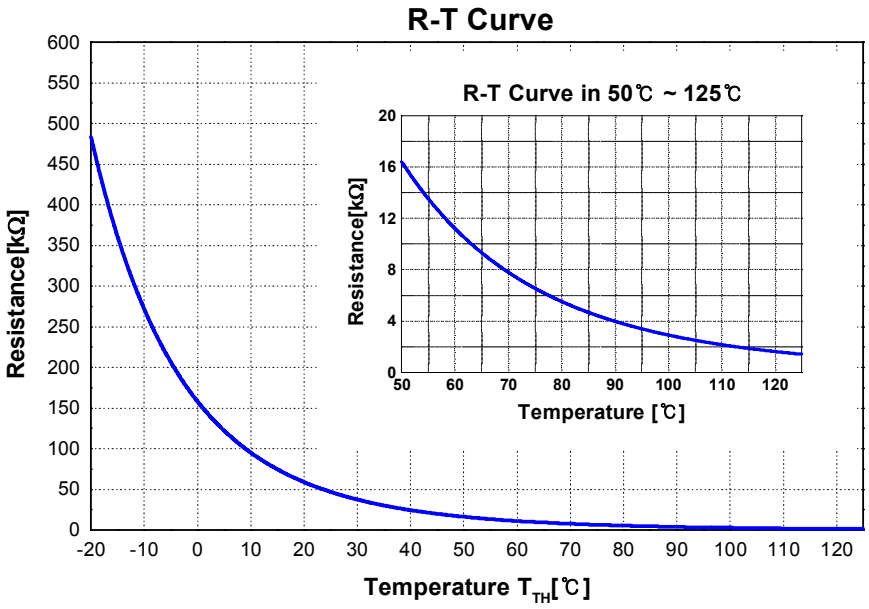

Figure. 6. R-T Curve of The Built-in Thermistor

Bootstrap Diode Part

Symbol	Parameter	Conditions	Min.	Typ.	Max.	Units
V_F	Forward Voltage	I_F = 0.1A, T_C = 25°C	-	2.5	-	V
t_{rr}	Reverse Recovery Time	I_F = 0.1A, T_C = 25°C	-	80	-	ns

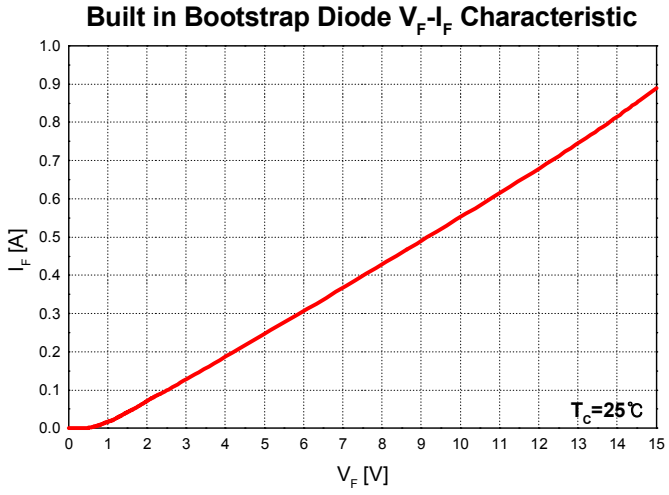

Note:

6. Built in bootstrap diode includes around 15Ω resistance characteristic.

Figure 7. Built in Bootstrap Diode Characteristic

Recommended Operating Conditions

Symbol	Parameter	Conditions	Value			Units
			Min.	Typ.	Max.	
V_{PN}	Supply Voltage	Applied between P - N_U, N_V, N_W	-	300	400	V
V_{CC}	Control Supply Voltage	Applied between $V_{CC(H)}$, $V_{CC(L)}$-COM	13.5	15	16.5	V
V_{BS}	High-side Bias Voltage	Applied between $V_{B(U)}$-$V_{S(U)}$, $V_{B(V)}$-$V_{S(V)}$, $V_{B(W)}$-$V_{S(W)}$	13.0	15	18.5	V
dV_{CC}/dt, dV_{BS}/dt	Control supply variation		-1	-	1	V/μs
t_{dead}	Blanking Time for Preventing Arm-short	For Each Input Signal	1.5	-	-	μs
f_{PWM}	PWM Input Signal	-40°C < T_J < 150°C	-	-	20	kHz
V_{SEN}	Voltage for Current Sensing	Applied between N_U, N_V, N_W - COM (Including surge voltage)	-4		4	V
$P_{WIN(ON)}$	Minimun Input Pulse Width	(Note 7)	0.5	-	-	μs
$P_{WIN(OFF)}$			0.5	-	-	

Note:

7. SPM might not make response if input pulse width is less than the recommanded value.

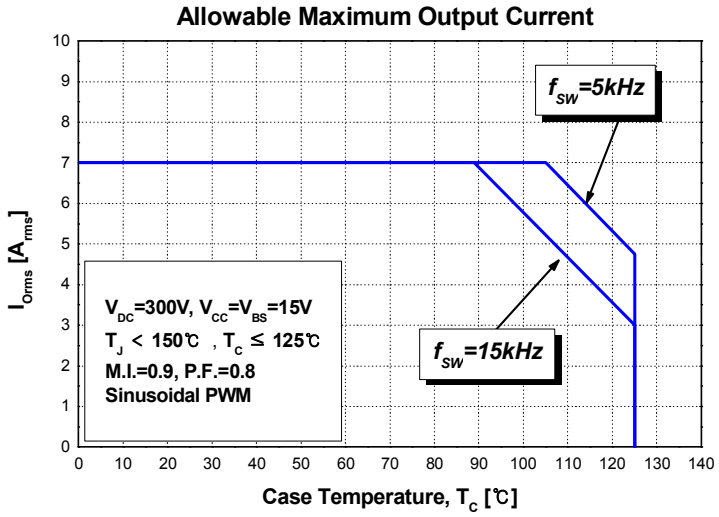

Note:

8. The allowable output current value may be different from the actual application.

Figure 8. Allowable Maximum Output Current

Package Marking and Ordering Information

Device Marking	Device	Package	Reel Size	Tape Width	Quantity
FNA41060	FNA41060	SPM26-AA	-	-	12

Mechanical Characteristics and Ratings

Parameter	Conditions		Limits			Units
			Min.	Typ.	Max.	
Device Flatness	Note Figure 9		0	-	+120	μm
Mounting Torque	Mounting Screw: - M3	Recommended 0.7N•m	0.6	0.7	0.8	N•m
	Note Figure 10	Recommended 7.1kg•cm	6.2	7.1	8.1	kg•cm
Weight			-	11	-	g

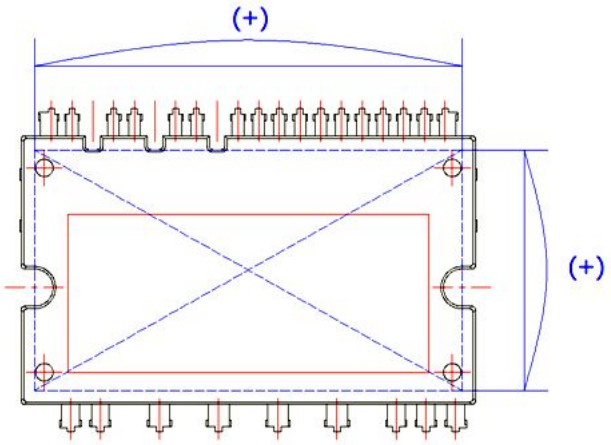

Figure 9. Flatness Measurement Position

Pre - Screwing : 1→2

Final Screwing : 2→1

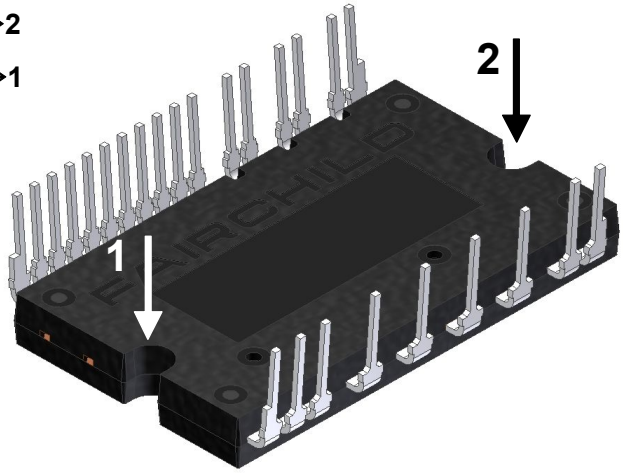

Note:

9. Do not make over torque when mounting screws. Much mounting torque may cause ceramic cracks, as well as bolts and Al heat-sink destruction.

10. Avoid one side tightening stress. Fig.10 shows the recommended torque order for mounting screws. Uneven mounting can cause the SPM ceramic substrate to be damaged. The Pre-Screwing torque is set to 20~30% of maximum torque rating.

Figure 10. Mounting Screws Torque Order

Time Charts of SPMs Protective Function

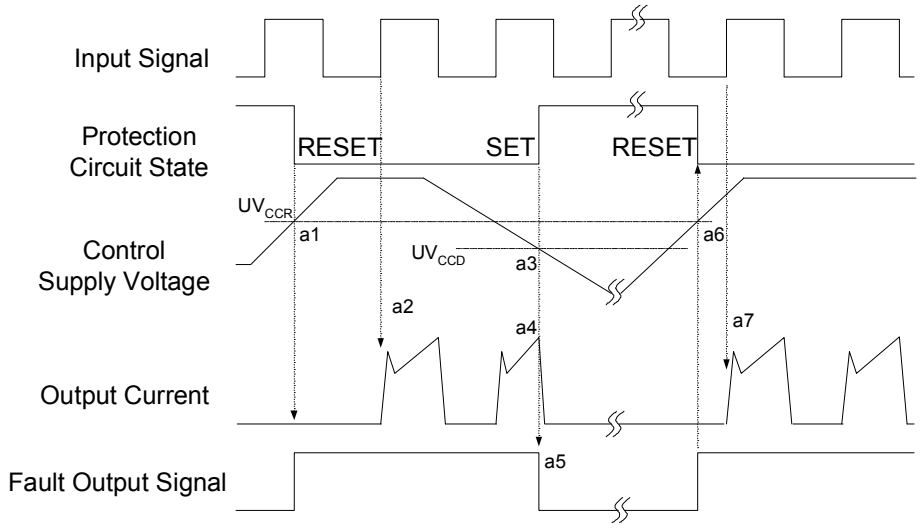

a1 : Control supply voltage rises: After the voltage rises UV_{CCR}, the circuits start to operate when next input is applied.

a2 : Normal operation: IGBT ON and carrying current.

a3 : Under voltage detection (UV_{CCD}).

a4 : IGBT OFF in spite of control input condition.

a5 : Fault output operation starts.

a6 : Under voltage reset (UV_{CCR}).

a7 : Normal operation: IGBT ON and carrying current.

Figure 11. Under-Voltage Protection (Low-side)

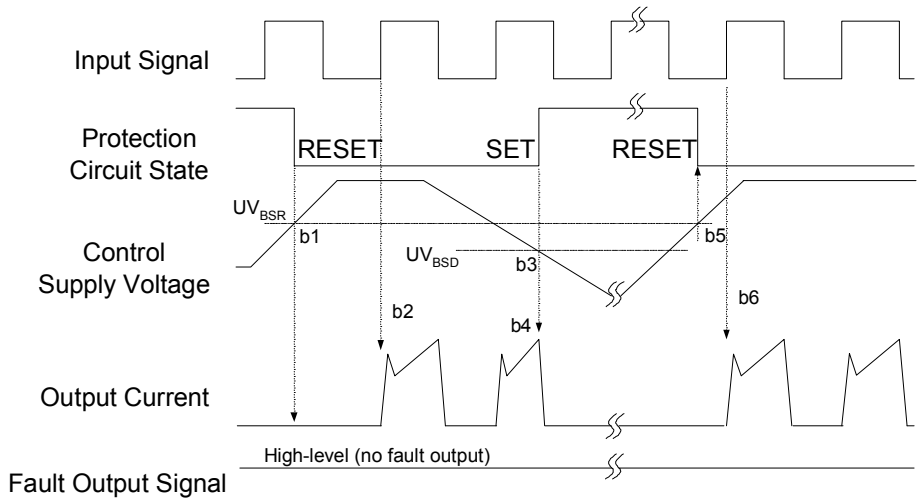

b1 : Control supply voltage rises: After the voltage reaches UV_{BSR}, the circuits start to operate when next input is applied.

b2 : Normal operation: IGBT ON and carrying current.

b3 : Under voltage detection (UV_{BSD}).

b4 : IGBT OFF in spite of control input condition, but there is no fault output signal.

b5 : Under voltage reset (UV_{BSR})

b6 : Normal operation: IGBT ON and carrying current

Figure 12. Under-Voltage Protection (High-side)

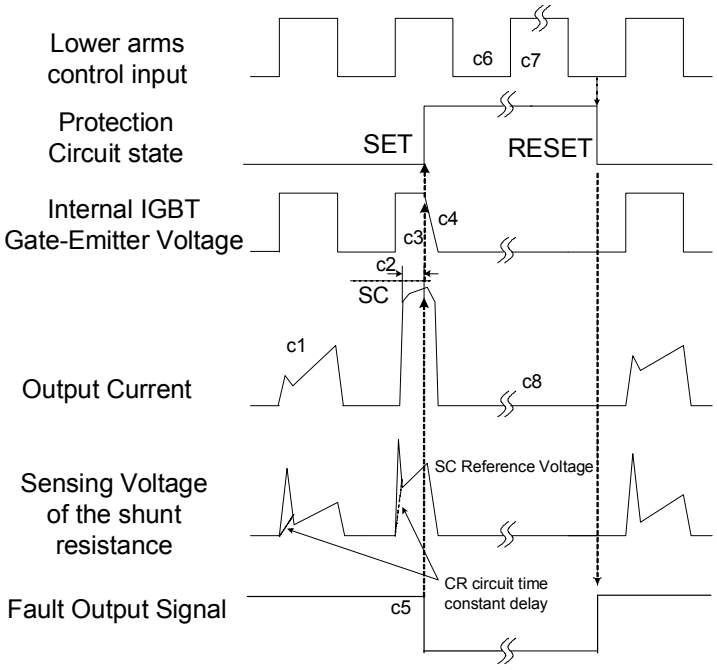

(with the external shunt resistance and CR connection)

c1 : Normal operation: IGBT ON and carrying current.

c2 : Short circuit current detection (SC trigger).

c3 : Hard IGBT gate interrupt.

c4 : IGBT turns OFF.

c5 : Input “L” : IGBT OFF state.

c6 : Input “H”: IGBT ON state, but during the active period of fault output the IGBT doesn’t turn ON.

c7 : IGBT OFF state

Figure 13. Short-Circuit Current Protection (Low-side Operation only)

Input/Output Interface Circuit

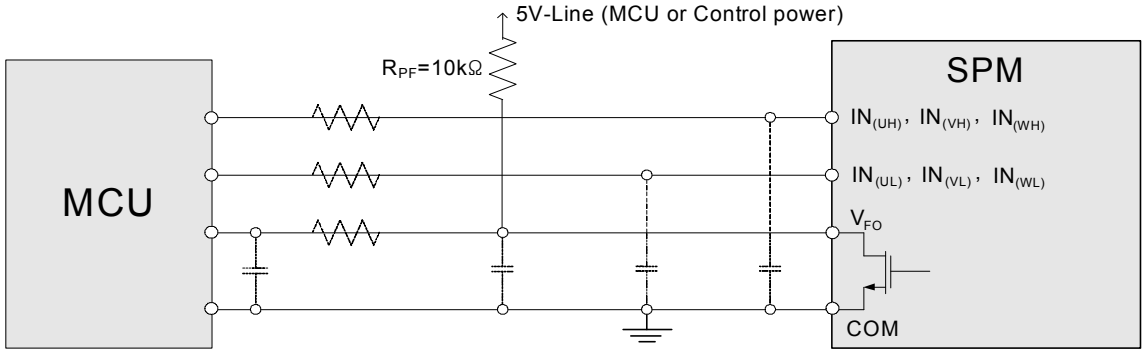

Note:

1) RC coupling at each input (parts shown dotted) might change depending on the PWM control scheme used in the application and the wiring impedance of the application’s printed circuit board. The SPM input signal section integrates 5kΩ (typ.) pull-down resistor. Therefore, when using an external filtering resistor, please pay attention to the signal voltage drop at input terminal.

2) The logic input is compatible with standard CMOS outputs.

Figure 14. Recommended CPU I/O Interface Circuit

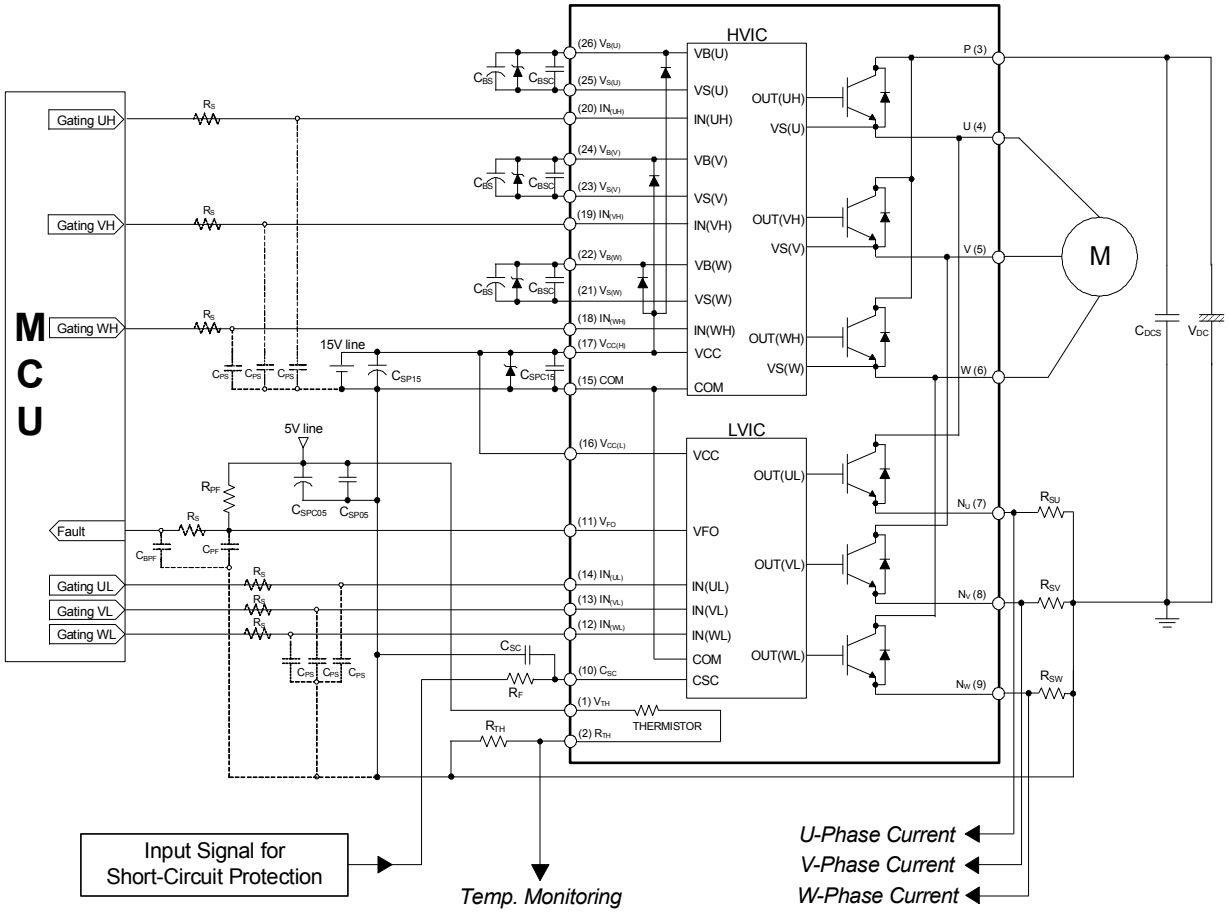

Note:

1) To avoid malfunction, the wiring of each input should be as short as possible. (less than 2-3cm)

2) By virtue of integrating an application specific type HVIC inside the SPM, direct coupling to CPU terminals without any opto-coupler or transformer isolation is possible.

3) V_{FO} output is open drain type. This signal line should be pulled up to the positive side of the MCU or control power supply with a resistor that makes I_{FO} up to 1mA. Please refer to Figure14.

4) C_{SP15} of around 7 times larger than bootstrap capacitor C_{BS} is recommended.

5) Input signal is High-Active type. There is a 5kΩ resistor inside the IC to pull down each input signal line to GND. RC coupling circuits is recommanded for the prevention of input signal oscillation. $R_S C_{PS}$ time constant should be selected in the range 50~150ns. (Recommended R_S=100Ω, C_{PS}=1nF)

6) To prevent errors of the protection function, the wiring around R_F and C_{SC} should be as short as possible.

7) In the short-circuit protection circuit, please select the $R_F C_{SC}$ time constant in the range 1.5~2μs.

8) Each capacitor should be mounted as close to the pins of the SPM as possible.

9) To prevent surge destruction, the wiring between the smoothing capacitor and the P&GND pins should be as short as possible. The use of a high frequency non-inductive capacitor of around 0.1~0.22μF between the P&GND pins is recommended.

10) Relays are used at almost every systems of electrical equipments of home appliances. In these cases, there should be sufficient distance between the CPU and the relays.

11) The zener diode should be adopted for the protection of ICs from the surge destruction between each pair of control supply terminals. (Recommanded zener diode=24V/1W)

12) Please choose the electrolytic capacitor with good temperature characteristic in C_{BS}. Also, choose 0.1~0.2μF R-category ceramic capacitors with good temperature and frequency characteristics in C_{BSC}.

13) For the detailed information, please refer to the AN-9070 and FEB305-001.

Figure 15. Typical Application Circuit

Detailed Package Outline Drawings

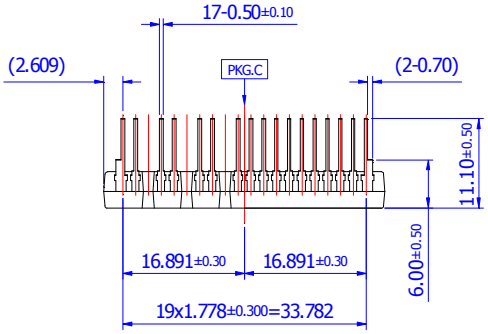

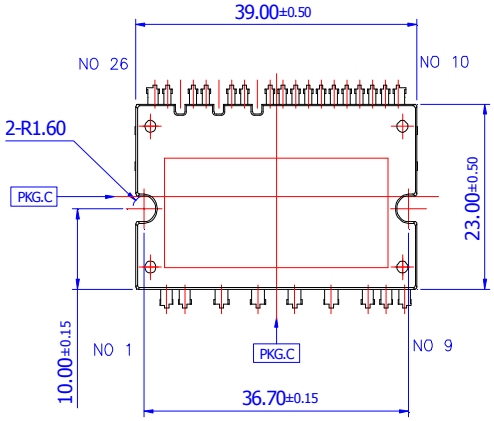

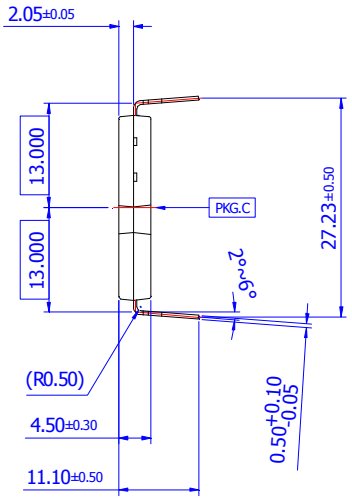

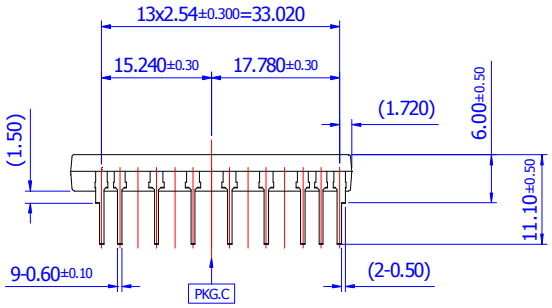

FAIRCHILD SEMICONDUCTOR®

TRADEMARKS

The following includes registered and unregistered trademarks and service marks, owned by Fairchild Semiconductor and/or its global subsidiaries, and is not intended to be an exhaustive list of all such trademarks.

Build it Now™
CorePLUS™
CorePOWER™
CROSSVOLT™
CTL™
Current Transfer Logic™
EcoSPARK®
EfficentMax™
EZSWITCH™ *
E²CMOS™
F®
Fairchild®
Fairchild Semiconductor®
FACT Quiet Series™
FACT®
FAST®
FastvCore™
FlashWriter® *
FPS™
F-PFS™
FRFET®
Global Power Resource℠
Green FPS™
Green FPS™ e-Series™
GTO™
IntelliMAX™
ISOPLANAR™
MegaBuck™
MICROCOUPLER™
MicroFET™
MicroPak™
MillerDrive™
MotionMax™
Motion-SPM™
OPTOLOGIC®
OPTOPLANAR®
®
PDP SPM™
Power-SPM™
PowerTrench®
PowerXS™
Programmable Active Droop™
QFET®
QS™
Quiet Series™
RapidConfigure™
™
Saving our world, 1mW /W /kW at a time™
SmartMax™
SMART START™
SPM®
STEALTH™
SuperFET™
SuperSOT™-3
SuperSOT™-6
SuperSOT™-8
SupreMOS™
SyncFET™
SYSTEM GENERAL ®
The Power Franchise®
the power franchise
TinyBoost™
TinyBuck™
TinyLogic®
TINYOPTO™
TinyPower™
TinyPWM™
TinyWire™
TriFault Detect™
μSerDes™
SerDes™
UHC®
Ultra FRFET™
UniFET™
VCX™
VisualMax™
XS™

* EZSWITCH™ and FlashWriter® are trademarks of System General Corporation, used under license by Fairchild Semiconductor.

DISCLAIMER

FAIRCHILD SEMICONDUCTOR RESERVES THE RIGHT TO MAKE CHANGES WITHOUT FURTHER NOTICE TO ANY PRODUCTS HEREIN TO IMPROVE RELIABILITY, FUNCTION, OR DESIGN. FAIRCHILD DOES NOT ASSUME ANY LIABILITY ARISING OUT OF THE APPLICATION OR USE OF ANY PRODUCT OR CIRCUIT DESCRIBED HEREIN; NEITHER DOES IT CONVEY ANY LICENSE UNDER ITS PATENT RIGHTS, NOR THE RIGHTS OF OTHERS. THESE SPECIFICATIONS DO NOT EXPAND THE TERMS OF FAIRCHILD'S WORLDWIDE TERMS AND CONDITIONS, SPECIFICALLY THE WARRANTY THEREIN, WHICH COVERS THESE PRODUCTS.

LIFE SUPPORT POLICY

FAIRCHILD'S PRODUCTS ARE NOT AUTHORIZED FOR USE AS CRITICAL COMPONENTS IN LIFE SUPPORT DEVICES OR SYSTEMS WITHOUT THE EXPRESS WRITTEN APPROVAL OF FAIRCHILD SEMICONDUCTOR CORPORATION.

As used herein:

1. Life support devices or systems are devices or systems which, (a) are intended for surgical implant into the body or (b) support or sustain life, and (c) whose failure to perform when properly used in accordance with instructions for use provided in the labeling, can be reasonably expected to result in a significant injury of the user.
2. A critical component in any component of a life support, device, or system whose failure to perform can be reasonably expected to cause the failure of the life support device or system, or to affect its safety or effectiveness.

ANTI-COUNTERFEITING POLICY

Fairchild Semiconductor Corporation's Anti-Counterfeiting Policy. Fairchild's Anti-Counterfeiting Policy is also stated on our external website, www.Fairchildsemi.com, under Sales Support.

Counterfeiting of semiconductor parts is a growing problem in the industry. All manufactures of semiconductor products are experiencing counterfeiting of their parts. Customers who inadvertently purchase counterfeit parts experience many problems such as loss of brand reputation, substandard performance, failed application, and increased cost of production and manufacturing delays. Fairchild is taking strong measures to protect ourselves and our customers from the proliferation of counterfeit parts. Fairchild strongly encourages customers to purchase Fairchild parts either directly from Fairchild or from Authorized Fairchild Distributors who are listed by country on our web page cited above. Products customers buy either from fairchild directly or from Authorized Fairchild Distributors are genuine parts, have full traceability, meet Fairchild's quality standards for handing and storage and provide access to Fairchild's full range of up-to-date technical and product information. Fairchild and our Authorized Distributors will stand behind all warranties and will appropriately address and warranty issues that may arise. Fairchild will not provide any warranty coverage or other assistance for parts bought from Unauthorized Sources. Fairchild is committed to combat this global problem and encourage our customers to do their part in stopping this practice by buying direct or from authorized distributors.

PRODUCT STATUS DEFINITIONS

Definition of Terms

Datasheet Identification	Product Status	Definition
Advance Information	Formative / In Design	Datasheet contains the design specifications for product development. Specifications may change in any manner without notice.
Preliminary	First Production	Datasheet contains preliminary data; supplementary data will be published at a later date. Fairchild Semiconductor reserves the right to make changes at any time without notice to improve design.
No Identification Needed	Full Production	Datasheet contains final specifications. Fairchild Semiconductor reserves the right to make changes at any time without notice to improve the design.
Obsolete	Not In Production	Datasheet contains specifications on a product that is discontinued by Fairchild Semiconductor. The datasheet is for reference information only.