IXYS

Advance Technical Information

Trench™ P & N-Channel Power MOSFET Common Drain Topology

FMP76-01T

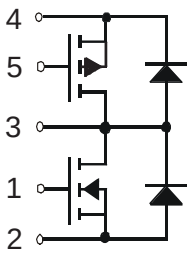

	P CH.	N CH.
V_{DSS}	- 100V	100V
I_{D25}	- 54A	62A
$R_{DS(on)}$	24mΩ	11mΩ
$t_{rr(typ)}$	70ns	67ns

ISOPLUS i4-Pak™

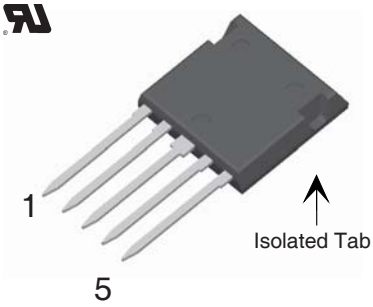

Symbol	Test Conditions	Maximum Ratings	
T_J		-55 ... +150	°C
T_{JM}		150	°C
T_{stg}		-55 ... +150	°C
V_{ISOLD}	50/60H_Z, RMS, t = 1min, leads-to-tab	2500	~V
T_L	1.6mm (0.062 in.) from case for 10s	300	°C
T_{SOLD}	Plastic body for 10s	260	°C
F_C	Mounting force	20..120 / 4.5..27	N/lb.

Symbol	Test Conditions	Characteristic Values Min.	Typ.	Max.	
C_P	Coupling capacitance between shorted pins and mounting tab in the case		40		pF
d_S ,d_A	pin - pin	1.7			mm
d_S ,d_A	pin - backside metal	5.5			mm
Weight			9		g

P - CHANNEL

Symbol	Test Conditions	Maximum Ratings	
V_{DSS}	T_J = 25°C to 150°C	- 100	V
V_{DGR}	T_J = 25°C to 150°C, R_{GS} = 1MΩ	- 100	V
V_{GSS}	Continuous	± 20	V
V_{GSM}	Transient	± 30	V
I_{D25}	T_C = 25°C	- 54	A
I_{DM}	T_C = 25°C, pulse width limited by T_{JM}	- 230	A
I_A	T_C = 25°C	- 38	A
E_{AS}	T_C = 25°C	1.0	J
P_D	T_C = 25°C	132	W

Features

- Silicon chip on Direct-Copper Bond (DCB) substrate
  - UL recognized package
  - Isolated mounting surface
  - 2500V electrical isolation
- Avalanche rated
- Low Q_G
- Low Drain-to-Tab capacitance
- Low package inductance

Advantages

- Low gate drive requirement
- High power density
- Low drain to ground capacitance
- Fast switching

Applications

- DC and AC motor drives
- Class AB audio amplifiers
- Multi-phase DC to DC converters
- Industrial battery chargers
- Switching power supplies

© 2008 IXYS CORPORATION, All rights reserved

Symbol	Test Conditions[2] (T_J = 25°C unless otherwise specified)	Characteristic Values Min.	Typ.	Max.	
BV_{DSS}	V_{GS} = 0V, I_D = - 250 μA	- 100			V
$V_{GS(th)}$	$V_{DS} = V_{GS}$, I_D = - 250μA	- 2.0		- 4.0	V
I_{GSS}	V_{GS} = ±20 V, V_{DS} = 0V			± 100	nA
I_{DSS}	$V_{DS} = V_{DSS}$, V_{GS} = 0V			-15	μA
	T_J = 125°C			- 750	μA
$R_{DS(on)}$	V_{GS} = -10V, I_D = - 38A, Note 1			24	mΩ
g_{fs}	V_{DS} = -10V, I_D = - 38A, Note 1	35	58		S
C_{iss}	V_{GS} = 0V, V_{DS} = - 25V, f = 1MHz		13.7		nF
C_{oss}			890		pF
C_{rss}			275		pF
$t_{d(on)}$	**Resistive Switching Times**		25		ns
t_r	V_{GS} = -10V, V_{DS} = 0.5 • V_{DSS}, I_D = - 38A		40		ns
$t_{d(off)}$	R_G = 1Ω (External)		52		ns
t_f			20		ns
$Q_{g(on)}$	V_{GS}= -10V, V_{DS} = 0.5 • V_{DSS}, I_D = - 38A		197		nC
Q_{gs}			65		nC
Q_{gd}			65		nC
R_{thJC}				0.95	°C/W
R_{thCS}			0.15		°C/W

ISOPLUS i4-Pak™ Outline

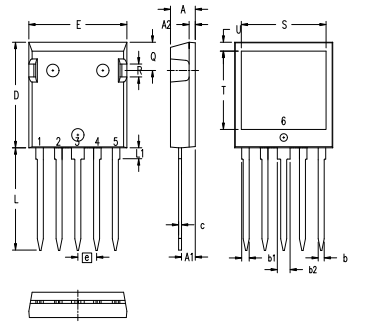

NOTE: Bottom heatsink meets 3000 Volts AC 1 sec isolation to the other pins.

SYM	INCHES MIN	INCHES MAX	MILLIMETERS MIN	MILLIMETERS MAX
A	.190	.205	4.83	5.21
A1	.102	.118	2.59	3.00
A2	.046	.085	1.17	2.16
b	.045	.055	1.14	1.40
b1	.058	.068	1.47	1.73
b2	.100	.110	2.54	2.79
C	.020	.029	0.51	0.74
D	.819	.840	20.80	21.34
E	.770	.799	19.56	20.29
e	.150 BSC		3.81 BSC	
L	.780	.840	19.81	21.34
L1	.083	.102	2.11	2.59
Q	.210	.244	5.33	6.20
R	.100	.180	2.54	4.57
S	.660	.690	16.76	17.53
T	.590	.620	14.99	15.75
U	.065	.080	1.65	2.03

Ref: IXYS CO 0077 R0

Drain-Source Diode

Symbol	Test Conditions[2] (T_J = 25°C unless otherwise specified)	Characteristic Values Min.	Typ.	Max.	
I_S	V_{GS} = 0V			- 54	A
I_{SM}	Repetitive, pulse width limited by T_{JM}			- 304	A
V_{SD}	I_F = - 38A, V_{GS} = 0V, Note 1			- 1.3	V
t_{rr}	I_F = - 38A, di/dt = 100A/μs		70		ns
Q_{RM}	V_R = - 50V, V_{GS} = 0V		215		nC
I_{RM}			- 6		A

IXYS reserves the right to change limits, test conditions, and dimensions.

IXYS MOSFETs and IGBTs are covered by one or more of the following U.S. patents: 4,835,592 4,850,072 4,881,106 4,931,844 5,017,508 5,034,796 5,049,961 5,063,307 5,187,117 5,237,481 5,381,025 5,486,715 6,162,665 6,259,123 B1 6,306,728 B1 6,404,065 B1 6,534,343 6,583,505 6,683,344 6,710,405 B2 6,710,463 6,727,585 6,759,692 6,771,478 B2 7,005,734 B2 7,063,975 B2 7,071,537 7,157,338B2

N - CHANNEL

Symbol	Test Conditions	Maximum Ratings	
V_{DSS}	T_J = 25°C to 150°C	100	V
V_{DGR}	T_J = 25°C to 150°C, R_{GS} = 1MΩ	100	V
V_{GSM}	Transient	± 20	V
I_{D25}	T_C = 25°C	62	A
I_{DM}	T_C = 25°C, pulse width limited by T_{JM}	300	A
I_A	T_C = 25°C	65	A
E_{AS}	T_C = 25°C	500	mJ
P_D	T_C = 25°C	89	W

Symbol	Test Conditions[2] (T_J = 25°C unless otherwise specified)	Characteristic Values Min.	Typ.	Max.	
BV_{DSS}	V_{GS} = 0V, I_D = 250 μA	100			V
$V_{GS(th)}$	V_{DS} = V_{GS}, I_D = 250μA	2.5		4.5	V
I_{GSS}	V_{GS} = ±20 V, V_{DS} = 0V			± 200	nA
I_{DSS}	V_{DS} = V_{DSS}, V_{GS} = 0V			5	μA
	V_{GS} = 0V, T_J = 150°C			250	μA
$R_{DS(on)}$	V_{GS} = 10V, I_D = 25A, (Note 1)			11	mΩ
g_{fs}	V_{DS} = 10V, I_D = 60A, (Note 1)	55	93		S
C_{iss}	V_{GS} = 0V, V_{DS} = 25 V, f = 1 MHz		5080		pF
C_{oss}			635		pF
C_{rss}			95		pF
$t_{d(on)}$	**Resistive Switching Times**		30		ns
t_r	V_{GS} = 10V, V_{DS} = 0.5 • V_{DSS}, I_D = 25A		47		ns
$t_{d(off)}$	R_G = 5Ω (External)		44		ns
t_f			28		ns
$Q_{g(on)}$	V_{GS}= 10V, V_{DS} = 0.5 • V_{DSS}, I_D = 25A		104		nC
Q_{gs}			30		nC
Q_{gd}			29		nC
R_{thJC}				1.4	°C/W
R_{thCS}			0.15		°C/W

© 2008 IXYS CORPORATION, All rights reserved

Source-Drain Diode **Characteristic Values**

(T_J = 25°C unless otherwise specified)

Symbol	Test Conditions[3]	Min.	Typ.	Max.	
I_S	V_{GS} = 0V			62	A
I_{SM}	Repetitive, pulse width limited by T_{JM}			350	A
V_{SD}	I_F = 25A, V_{GS} = 0V, Note 1			1.0	V
t_{rr}	I_F = 25A, -di/dt = 100A/µs V_R = 50V, V_{GS} = 0V		67		ns
Q_{RM}			160		nC
I_{RM}			4.7		A

Note 1: Pulse test, t ≤ 300µs, duty cycle, d ≤ 2 %.

ADVANCE TECHNICAL INFORMATION

The product presented herein is under development. The Technical Specifications offered are derived from a subjective evaluation of the design, based upon prior knowledge and experience, and constitute a "considered reflection" of the anticipated objective result. IXYS reserves the right to change limits, test conditions, and dimensions without notice.