# FMM5715X

## 60GHz Power Amplifier

**FEATURES**

- High Output Power; P1dB = 16 dBm (Typ.) @ f = 60 GHz
- High Linear Gain: $|S_{21}|$ = 17 dB(Typ) @ f = 60 GHz
- Wide Frequency Band : 57 - 64 GHz
- Impedance Matched Zin/Zout = 50Ω

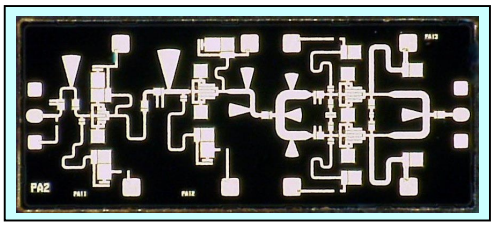

**DESCRIPTION**

The FMM5715X is a power amplifier MMIC designed for applications in the 57-64 GHz frequency range. This product is well suited for wireless LAN and point-to-point radio.
Eudyna's stringent Quality Assurance Program assures the highest reliability and consistent performance.

**ABSOLUTE MAXIMUM RATING (Case Temperature Tc=25°C)**

| Item | Symbol | Rating | Unit |
|---|---|---|---|
| DC Input Voltage | $V_{DD}$ | +4 | V |
| DC Input Voltage | $V_{GG}$ | -3 | V |
| Input Power | $P_{in}$ | 3 | dBm |
| Storage Temperature | $T_{stg}$ | -55 to +125 | °C |

**RECOMMENDED OPERATING CONDITION (Case Temperature Tc=25°C)**

| Item | Symbol | Condition | Unit |
|---|---|---|---|
| DC Input Voltage | $V_{DD}$ | 3 | V |
| Backside Temperature | $T_B$ | -45 to +85 | °C |

**ELECTRICAL CHARACTERISTICS (Case Temperature Tc=25°C)**

| Item | Symbol | Condition | Limit | | | Unit |
|---|---|---|---|---|---|---|
| | | | Min. | Typ. | Max. | |
| Output Power at 1dB G.C.P. | P1dB | $V_{DD}$=3V | 12 | 16 | - | dBm |
| Linear Gain | $\|S_{21}\|$ | $V_{GG}$=0V | 14 | 18 | - | dB |
| Total Drain Current | IDDt | *f = 57~64 GHz* | - | 150 | - | mA |
| Input Return Loss | $\|S_{11}\|$ | | - | 8 | - | dB |
| Output Return Loss | $\|S_{22}\|$ | | - | 8 | - | dB |

These values are representative for CW on chip measurements that are made without bonding wires at the RF ports.

| ESD | Class 0 | ~ 199V |
|---|---|---|

Note : Based on EIAJ ED-4701 C-111A(C=100pF, R=1.5kΩ)

**Output Power vs. Input Power**
**Bias Conditions: $V_{DD}$ = 3V, $V_{GG}$ = 0 V**

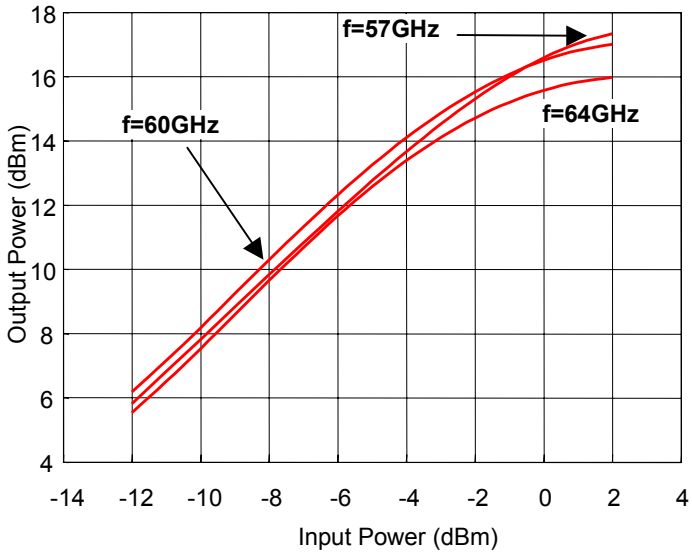


**Output Power vs. Frequency**
**Bias Conditions: $V_{DD}$ = 3V, $V_{GG}$ = 0 V**

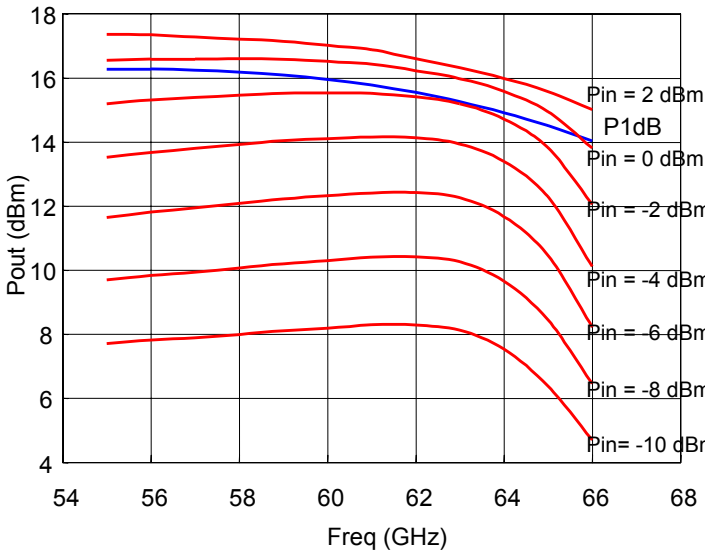


**Typical on chip measurements**

**Linear Gain vs. Frequency**
**Bias Conditions: $V_{DD}$ = 3V, $V_{GG}$ = 0, -0.1, -0.2 V**

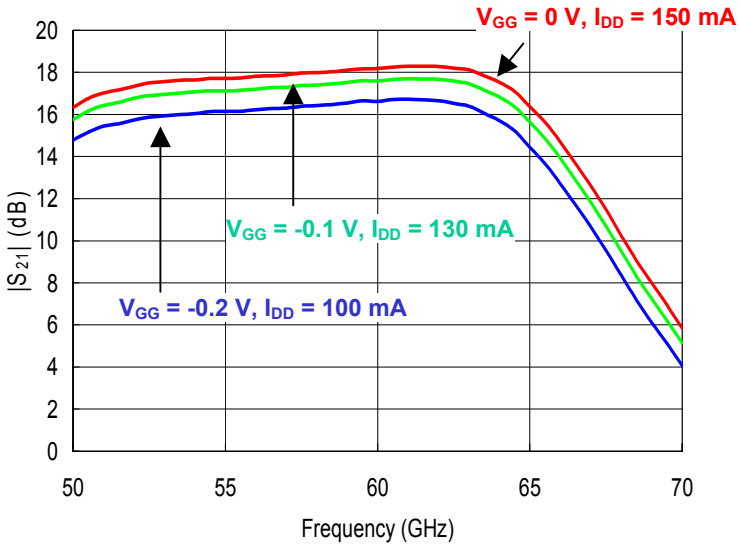


**Input Return Loss vs. Frequency**
**Bias Conditions: $V_{DD}$ = 3V, $V_{GG}$ = 0, -0.1, -0.2 V**

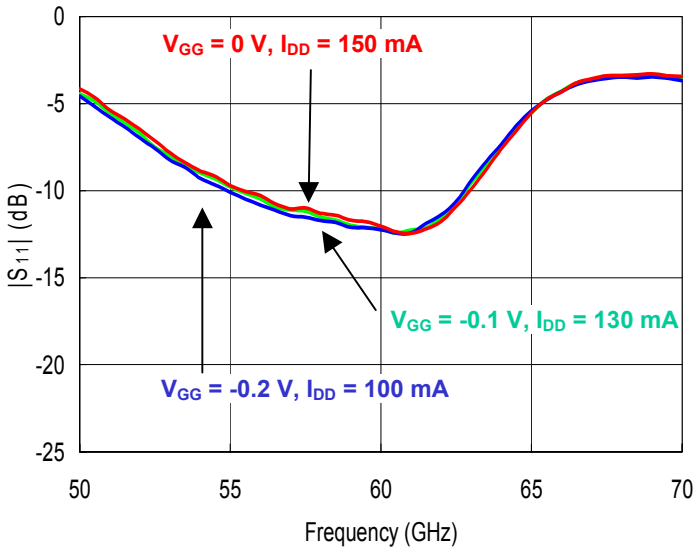


**Output Return Loss vs. Frequency**
**Bias Conditions: $V_{DD}$ = 3V, $V_{GG}$ = 0, -0.1, -0.2 V**

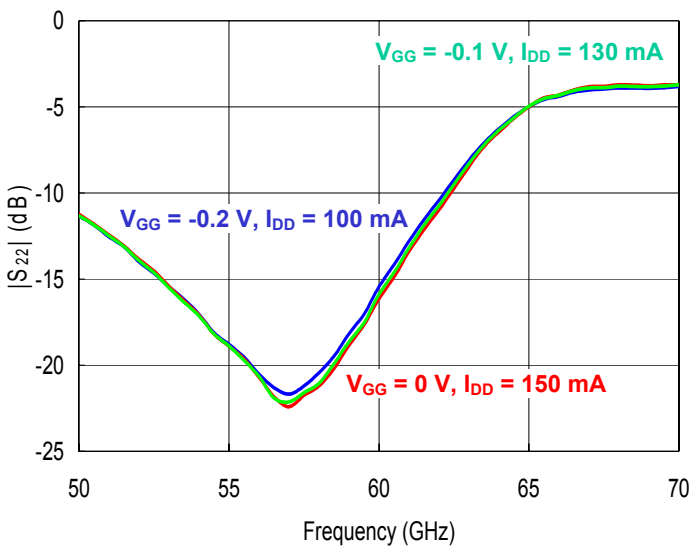


**Typical on chip measurements**

**S-PARAMETERS**
**$V_{DD}$ = 3V, $V_{GG}$ = 0V, $I_{DD}$ = 150 mA**

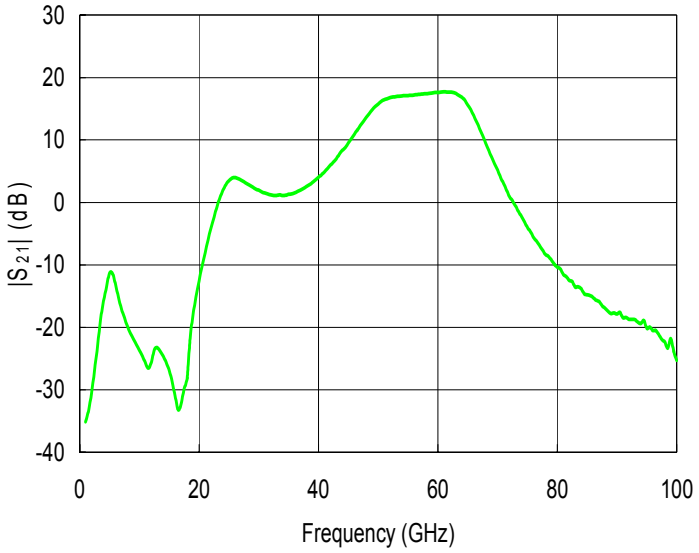


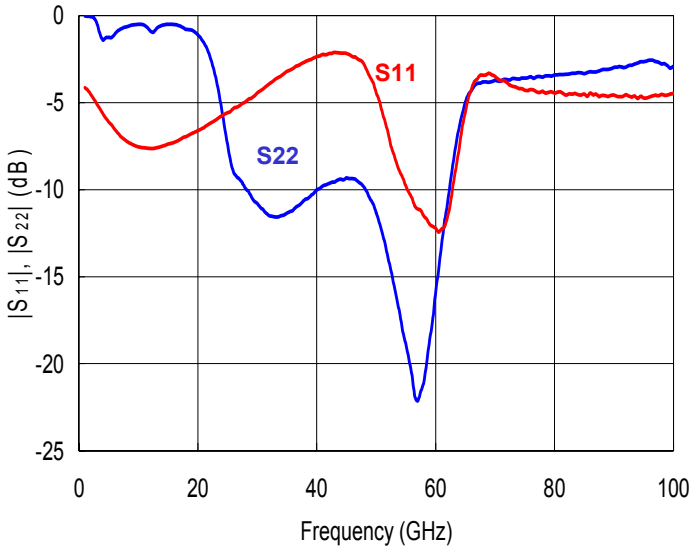


**Typical on chip measurements**

## S-PARAMETERS
## VDD = 3V, VGG = 0V, IDD= 150 mA

| Freq | S11 | | S21 | | S12 | | S22 | | Freq | S11 | | S21 | | S12 | | S22 | |
|---|---|---|---|---|---|---|---|---|---|---|---|---|---|---|---|---|---|
| GHz | MAG | ANG | MAG | ANG | MAG | ANG | MAG | ANG | GHz | MAG | ANG | MAG | ANG | MAG | ANG | MAG | ANG |
| 1 | 0.621 | -14.4 | 0.017 | -120.8 | 0.00014 | -72.6 | 0.997 | -11.7 | 51 | 0.539 | 63.0 | 7.091 | -170.0 | 0.00306 | 86.8 | 0.239 | 126.3 |
| 2 | 0.594 | -27.8 | 0.031 | 163.7 | 0.00010 | 99.9 | 0.994 | -23.8 | 52 | 0.474 | 51.1 | 7.366 | 164.1 | 0.00443 | 77.6 | 0.203 | 119.0 |
| 3 | 0.557 | -39.5 | 0.075 | 95.4 | 0.00029 | 65.9 | 0.952 | -37.4 | 53 | 0.406 | 40.2 | 7.559 | 138.8 | 0.00442 | 66.8 | 0.170 | 112.6 |
| 4 | 0.523 | -49.5 | 0.170 | 10.6 | 0.00060 | -7.4 | 0.851 | -43.9 | 54 | 0.360 | 29.1 | 7.621 | 113.2 | 0.00520 | 48.4 | 0.140 | 104.9 |
| 5 | 0.496 | -57.9 | 0.290 | -71.5 | 0.00072 | -95.9 | 0.867 | -50.7 | 55 | 0.327 | 17.3 | 7.686 | 89.6 | 0.00858 | 35.4 | 0.114 | 94.2 |
| 6 | 0.472 | -65.8 | 0.237 | -153.2 | 0.00037 | -155.0 | 0.884 | -57.2 | 56 | 0.306 | 3.3 | 7.781 | 64.9 | 0.00716 | 3.4 | 0.092 | 73.9 |
| 7 | 0.451 | -72.3 | 0.153 | 164.6 | 0.00018 | 155.9 | 0.913 | -65.9 | 57 | 0.280 | -11.1 | 7.841 | 41.7 | 0.00672 | -5.2 | 0.076 | 47.1 |
| 8 | 0.436 | -77.8 | 0.110 | 139.6 | 0.00012 | 118.3 | 0.930 | -74.8 | 58 | 0.272 | -26.2 | 7.938 | 17.2 | 0.00558 | -17.1 | 0.087 | 14.3 |
| 9 | 0.425 | -82.9 | 0.086 | 122.5 | 0.00007 | -41.9 | 0.939 | -83.6 | 59 | 0.260 | -41.3 | 8.046 | -7.1 | 0.00725 | -22.4 | 0.114 | -12.7 |
| 10 | 0.419 | -87.5 | 0.071 | 109.1 | 0.00017 | -169.4 | 0.944 | -92.3 | 60 | 0.250 | -52.8 | 8.118 | -32.4 | 0.00711 | -57.6 | 0.156 | -29.2 |
| 11 | 0.416 | -91.7 | 0.056 | 101.6 | 0.00015 | -161.2 | 0.938 | -101.0 | 61 | 0.238 | -58.3 | 8.218 | -59.3 | 0.00784 | -84.1 | 0.214 | -39.9 |
| 12 | 0.415 | -95.6 | 0.056 | 112.7 | 0.00035 | 177.6 | 0.904 | -108.5 | 62 | 0.258 | -59.3 | 8.207 | -86.5 | 0.00681 | -108.3 | 0.282 | -49.9 |
| 13 | 0.416 | -99.0 | 0.074 | 90.6 | 0.00032 | 36.7 | 0.916 | -113.1 | 63 | 0.319 | -62.2 | 8.059 | -117.0 | 0.00671 | -137.5 | 0.377 | -60.3 |
| 14 | 0.420 | -102.4 | 0.063 | 70.8 | 0.00026 | 8.6 | 0.938 | -120.7 | 64 | 0.417 | -70.1 | 7.527 | -148.2 | 0.00818 | -168.1 | 0.475 | -73.7 |
| 15 | 0.426 | -105.7 | 0.048 | 59.9 | 0.00017 | -4.8 | 0.945 | -128.4 | 65 | 0.529 | -82.9 | 6.591 | -179.3 | 0.00671 | 149.7 | 0.562 | -87.0 |
| 16 | 0.431 | -108.9 | 0.030 | 63.3 | 0.00059 | -101.0 | 0.943 | -136.1 | 66 | 0.608 | -99.0 | 5.437 | 150.7 | 0.00734 | 112.2 | 0.608 | -100.5 |
| 17 | 0.439 | -111.8 | 0.026 | 110.9 | 0.00032 | -106.7 | 0.934 | -144.1 | 67 | 0.662 | -114.1 | 4.272 | 122.6 | 0.00429 | 98.2 | 0.643 | -111.5 |
| 18 | 0.449 | -115.0 | 0.044 | 150.1 | 0.00101 | -142.6 | 0.913 | -151.4 | 68 | 0.678 | -127.9 | 3.252 | 98.8 | 0.00629 | 70.4 | 0.651 | -120.4 |
| 19 | 0.457 | -118.3 | 0.135 | 142.7 | 0.00121 | 147.0 | 0.909 | -159.4 | 69 | 0.685 | -139.7 | 2.512 | 77.2 | 0.00633 | 70.3 | 0.647 | -127.7 |
| 20 | 0.465 | -120.9 | 0.254 | 122.9 | 0.00060 | 93.4 | 0.881 | -168.6 | 70 | 0.672 | -149.3 | 1.962 | 58.0 | 0.00578 | 61.1 | 0.652 | -133.5 |
| 21 | 0.477 | -123.9 | 0.424 | 99.8 | 0.00019 | 167.5 | 0.834 | -178.2 | 71 | 0.652 | -158.2 | 1.543 | 39.8 | 0.00716 | 52.8 | 0.652 | -138.5 |
| 22 | 0.488 | -126.5 | 0.668 | 73.6 | 0.00028 | -175.4 | 0.765 | 171.7 | 72 | 0.644 | -165.6 | 1.209 | 23.7 | 0.00683 | 33.0 | 0.656 | -143.0 |
| 23 | 0.501 | -129.5 | 0.995 | 42.7 | 0.00055 | -99.4 | 0.664 | 162.6 | 73 | 0.628 | -171.6 | 1.007 | 7.4 | 0.00710 | 25.4 | 0.659 | -147.5 |
| 24 | 0.513 | -132.1 | 1.341 | 8.8 | 0.00103 | -157.2 | 0.540 | 155.6 | 74 | 0.619 | -177.6 | 0.827 | -8.1 | 0.00660 | 20.9 | 0.663 | -151.0 |
| 25 | 0.525 | -135.2 | 1.607 | -27.4 | 0.00193 | 168.1 | 0.424 | 154.7 | 75 | 0.609 | 177.7 | 0.675 | -21.7 | 0.00819 | 19.7 | 0.658 | -154.5 |
| 26 | 0.541 | -137.9 | 1.713 | -62.7 | 0.00154 | 159.5 | 0.355 | 160.3 | 76 | 0.605 | 172.2 | 0.562 | -34.4 | 0.00823 | 14.0 | 0.665 | -158.0 |
| 27 | 0.551 | -141.2 | 1.633 | -93.4 | 0.00174 | 149.5 | 0.340 | 165.3 | 77 | 0.611 | 167.2 | 0.497 | -47.0 | 0.00701 | -4.7 | 0.667 | -160.9 |
| 28 | 0.565 | -144.1 | 1.530 | -118.8 | 0.00157 | 115.7 | 0.321 | 166.5 | 78 | 0.608 | 161.8 | 0.420 | -60.0 | 0.01034 | -3.8 | 0.663 | -163.9 |
| 29 | 0.578 | -146.8 | 1.431 | -141.8 | 0.00233 | 105.5 | 0.304 | 168.0 | 79 | 0.600 | 156.2 | 0.367 | -72.4 | 0.00994 | -20.5 | 0.673 | -166.8 |
| 30 | 0.599 | -150.1 | 1.355 | -161.5 | 0.00132 | 94.0 | 0.291 | 170.1 | 80 | 0.602 | 150.6 | 0.328 | -84.8 | 0.00836 | -20.5 | 0.674 | -169.3 |
| 31 | 0.615 | -153.4 | 1.284 | -179.5 | 0.00094 | 64.0 | 0.279 | 172.7 | 81 | 0.599 | 145.5 | 0.288 | -96.8 | 0.00812 | -35.3 | 0.675 | -172.2 |
| 32 | 0.636 | -157.1 | 1.241 | 164.4 | 0.00089 | 83.0 | 0.268 | 174.8 | 82 | 0.594 | 139.6 | 0.262 | -112.8 | 0.00798 | -44.6 | 0.676 | -174.6 |
| 33 | 0.655 | -160.8 | 1.223 | 148.5 | 0.00098 | 118.6 | 0.264 | 177.4 | 83 | 0.592 | 134.8 | 0.233 | -123.3 | 0.00873 | -59.2 | 0.680 | -177.4 |
| 34 | 0.671 | -165.2 | 1.221 | 133.4 | 0.00110 | 117.8 | 0.266 | -179.6 | 84 | 0.591 | 129.0 | 0.214 | -136.8 | 0.01010 | -62.9 | 0.683 | -179.3 |
| 35 | 0.693 | -169.3 | 1.249 | 118.5 | 0.00084 | 100.7 | 0.269 | -178.2 | 85 | 0.596 | 122.6 | 0.179 | -147.9 | 0.00993 | -79.3 | 0.679 | 178.1 |
| 36 | 0.708 | -173.5 | 1.277 | 105.4 | 0.00137 | 97.6 | 0.274 | -177.0 | 86 | 0.592 | 116.9 | 0.180 | -162.7 | 0.00722 | -97.1 | 0.683 | 176.0 |
| 37 | 0.723 | -178.4 | 1.349 | 91.1 | 0.00151 | 101.2 | 0.282 | -176.1 | 87 | 0.594 | 110.4 | 0.174 | -175.5 | 0.00510 | -117.5 | 0.688 | 174.2 |
| 38 | 0.733 | 176.6 | 1.432 | 77.2 | 0.00222 | 84.0 | 0.294 | -176.7 | 88 | 0.588 | 103.9 | 0.157 | 168.8 | 0.00493 | -104.3 | 0.697 | 172.0 |
| 39 | 0.752 | 171.3 | 1.544 | 63.4 | 0.00159 | 75.6 | 0.301 | -177.0 | 89 | 0.591 | 97.1 | 0.149 | 154.2 | 0.00488 | -92.7 | 0.699 | 169.4 |
| 40 | 0.764 | 165.7 | 1.702 | 49.2 | 0.00181 | 85.4 | 0.313 | -178.1 | 90 | 0.584 | 90.6 | 0.139 | 137.5 | 0.00399 | -97.3 | 0.703 | 167.0 |
| 41 | 0.775 | 159.6 | 1.878 | 34.0 | 0.00218 | 51.3 | 0.321 | 179.6 | 91 | 0.593 | 82.6 | 0.133 | 123.7 | 0.00317 | -136.6 | 0.714 | 164.4 |
| 42 | 0.782 | 153.3 | 2.114 | 19.3 | 0.00182 | 70.5 | 0.327 | 177.2 | 92 | 0.584 | 75.9 | 0.123 | 108.4 | 0.00200 | -111.8 | 0.712 | 162.3 |
| 43 | 0.788 | 146.0 | 2.388 | 3.2 | 0.00176 | 47.2 | 0.331 | 174.1 | 93 | 0.586 | 68.4 | 0.125 | 91.0 | 0.00256 | -104.6 | 0.721 | 159.8 |
| 44 | 0.787 | 138.6 | 2.779 | -14.0 | 0.00248 | 60.8 | 0.337 | 170.8 | 94 | 0.583 | 59.6 | 0.113 | 72.3 | 0.00254 | 14.5 | 0.735 | 157.6 |
| 45 | 0.785 | 130.4 | 3.178 | -32.0 | 0.00156 | 37.4 | 0.341 | 166.8 | 95 | 0.582 | 53.5 | 0.115 | 52.9 | 0.00210 | -8.0 | 0.737 | 154.5 |
| 46 | 0.776 | 121.7 | 3.717 | -50.8 | 0.00149 | 38.9 | 0.340 | 162.1 | 96 | 0.584 | 45.5 | 0.104 | 27.2 | 0.00369 | -8.0 | 0.743 | 151.1 |
| 47 | 0.759 | 110.9 | 4.379 | -71.9 | 0.00133 | 123.7 | 0.333 | 155.8 | 97 | 0.582 | 37.5 | 0.091 | 13.9 | 0.00491 | -9.6 | 0.739 | 147.0 |
| 48 | 0.730 | 99.9 | 5.101 | -93.8 | 0.00158 | 65.1 | 0.321 | 148.7 | 98 | 0.589 | 30.9 | 0.078 | -13.9 | 0.00359 | -27.7 | 0.731 | 144.9 |
| 49 | 0.680 | 87.9 | 5.891 | -118.2 | 0.00239 | 89.0 | 0.299 | 142.1 | 99 | 0.587 | 23.4 | 0.082 | -34.7 | 0.00488 | -22.7 | 0.715 | 142.2 |
| 50 | 0.620 | 75.0 | 6.554 | -143.2 | 0.00188 | 97.9 | 0.275 | 134.2 | 100 | 0.595 | 15.9 | 0.057 | -63.6 | 0.00667 | -38.3 | 0.717 | 141.6 |

**Typical on chip measurements**

**CHIP OUTLINE**

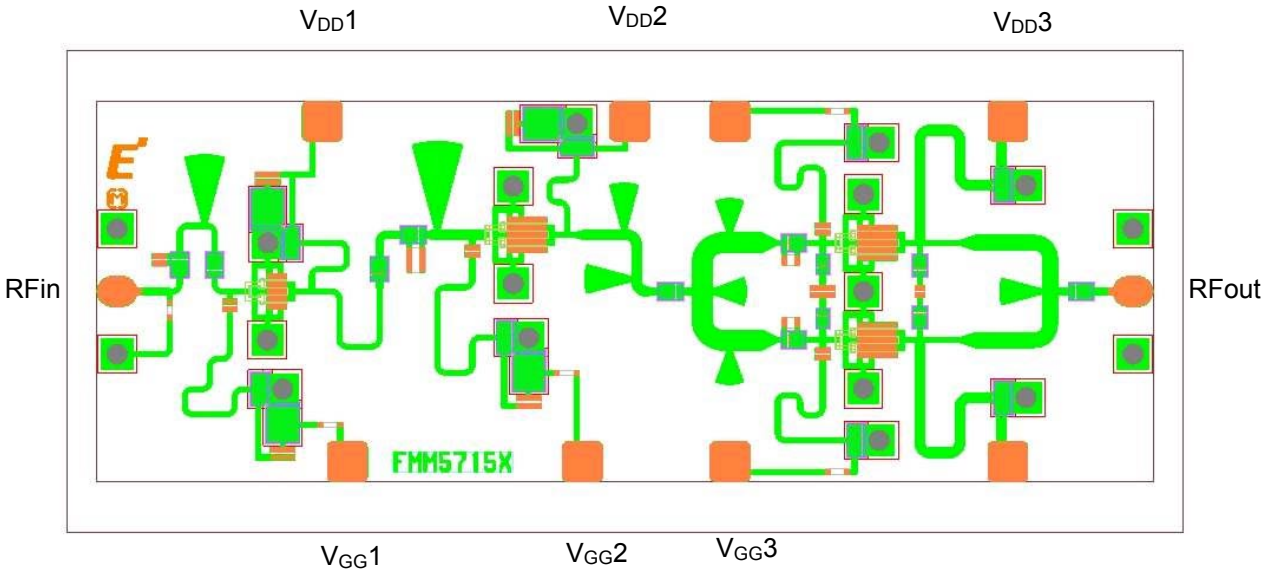


**Bonding Pad Locations (Dimension in Micron Meters)**

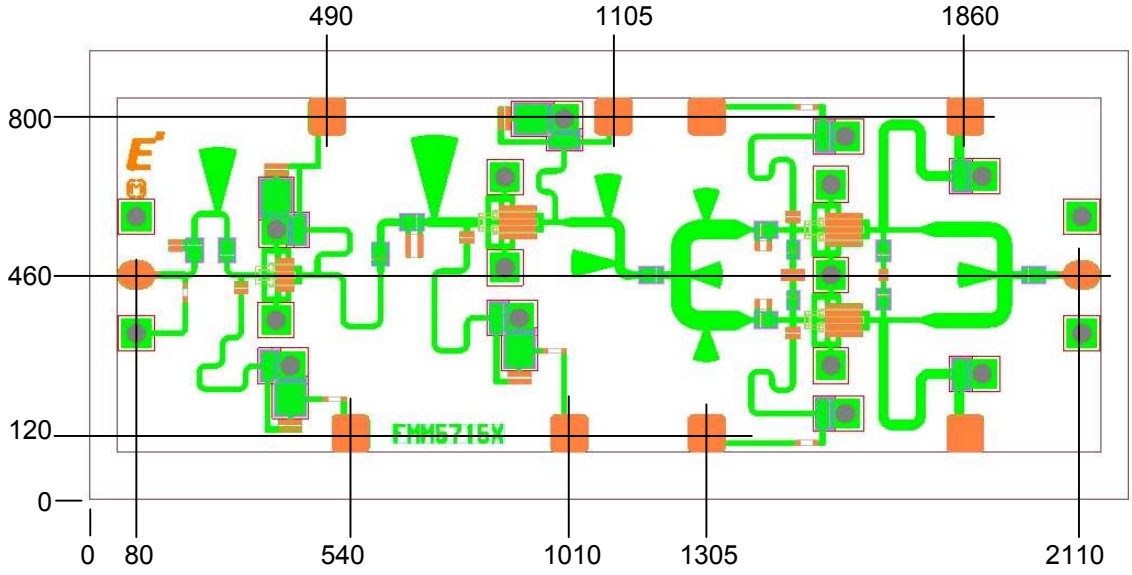


Pad Dimensions
DC Pads; 80 x 80 μm
RF Pads; 80 x 60 μm

Unit; μm
Chip size; 2190 x 920 μm
Chip Thickness; 70 μm

**Assembly Diagrams**

Recommendation assembly

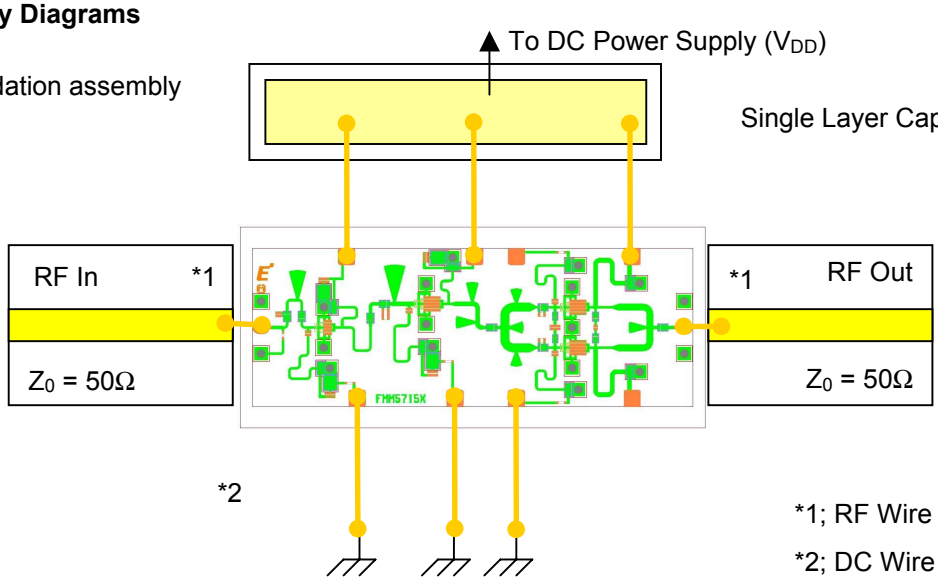


*1; RF Wire Length = 150 µm

*2; DC Wire Length ≤ 1000 µm

DC Power Supply for a Custom Application

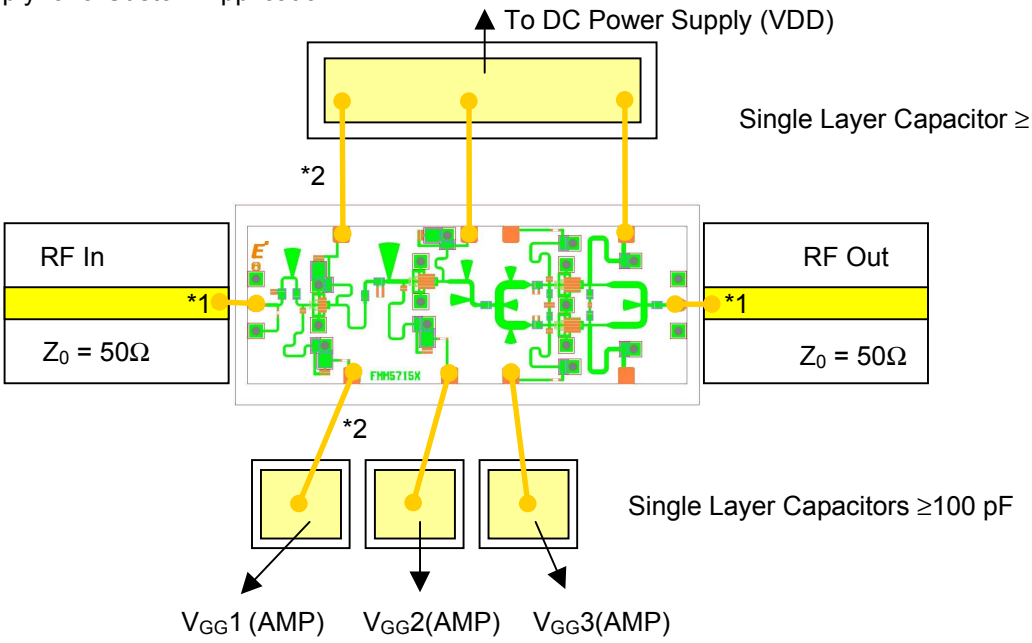

**MTTF vs. Backside Temperature**

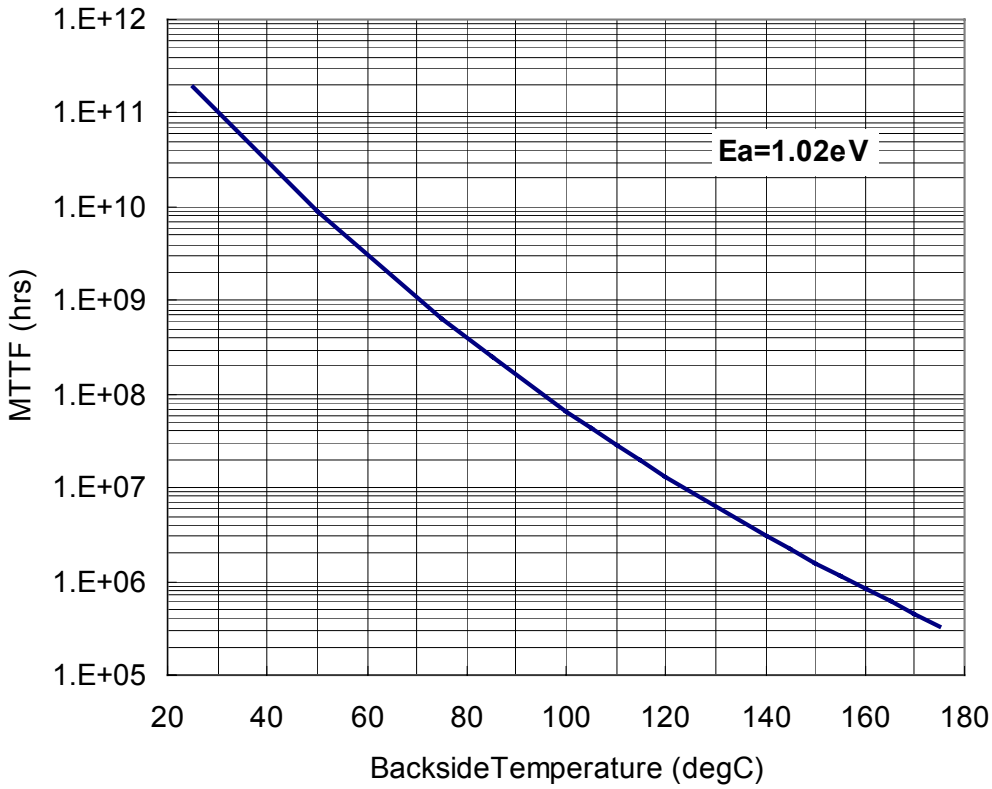

**DIE ATTACH**

**1) The die-attach station must have accurate temperature control, and an inert forming gas should be used.**
**2)Chips should be kept at room temperature except during die-attach.**
**3) Place package or carrier on the heated stage.**
**4) Lightly grasp the chip edges by the longer side using tweezers.**
**Die attach conditions**
**Stage Temperature : 300 to 310 deg.C**
**Time : less than 15 seconds**
**AuSn Perform Volume : per next Figure**

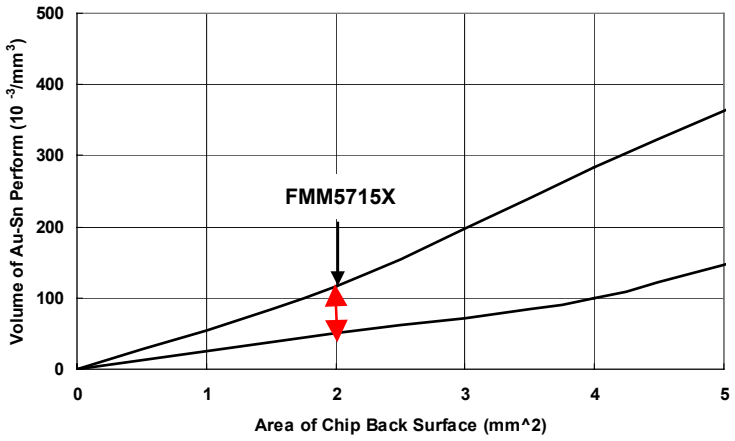


**WIRE BONDING**

**The bonding equipment must be properly grounded. The following or equivalent equipment, tools, materials, and conditions are recommended.**

**1) Bonding Equipment and Bonding Tool.**
**Bonding Equipment : West Bond Model 7400 (Manual Bonder)**
**Bonding Tool : CCOD-1/16-S-437-60-F-2010-MP (Deweyl)**
**2) Bonding Wire**
**Material : Hard or Half hard gold**
**Diameter : 0.7 to 1.0 mil**
**3) Bonding Conditions**
**Method : Thermal Compression Bonding with Ultrasonic Power**
**Tool Force : 0.196 N +/- 0.0196 N**
**Stage Temperature : 215 deg.C +/- 5 deg.C**
**Tool Heater : None**
**Ultrasonic Power Transmitter : West Bond Model 1400**
**Duration : 150 mS/Bond**

**Eudyna Devices USA Inc.**
2355 Zanker Rd.
San Jose, CA 95131-1138, U.S.A.
TEL: (408) 232-9500
FAX: (408) 428-9111
www.us.eudyna.com

**Eudyna Devices Europe Ltd.**
Network House
Norreys Drive
Maidenhead, Berkshire SL6 4FJ
United Kingdom
TEL: +44 (0) 1628 504800
FAX: +44 (0) 1628 504888

**Eudyna Devices Asia Pte. Ltd.**
Hong Kong Branch
Suite 1906B, Tower 6, China Hong Kong City
33 Canton Road, Tsimshatsui, Kowloon
Hong Kong
TEL: +852-2377-0227
FAX: +852-2377-3921

**Eudyna Devices Inc.**
**Sales Division**
1, Kanai-cho, Sakae-ku
Yokohama, 244-0845, Japan
TEL +81-45-853-8156
FAX +81-45-853-8170

**CAUTION**

Eudyna Devices Inc. products contain **gallium arsenide (GaAs)** which can be hazardous to the human body and the environment. For safety, observe the following procedures:

•Do not put these products into the mouth.

•Do not alter the form of this product into a gas, powder, or liquid through burning, crushing, or chemical processing as these by-products are dangerous to the human body if inhaled, ingested, or swallowed.

•Observe government laws and company regulations when discarding this product. This product must be discarded in accordance with methods specified by applicable hazardous waste procedures.

Eudyna Devices Inc. reserves the right to change products and specifications without notice.The information does not convey any license under rights of Eudyna Devices Inc. or others.

© 2005 Eudyna Devices USA Inc.
Printed in U.S.A.