FMAC-Out

Output filter for 3-phase frequency inverter



See below:
Approvals and Compliances

Description

- Compact design
- Standard versions include insulated safety screw terminals
- Enhancement of the system efficiency

Applications

- Voltage rating 550 VAC for world wide acceptance
- Motors can be fed through long cables
- Reduces the voltage rise rate of inverter output voltage

Weblinks

pdf data sheet, html datasheet, General Product Information, Approvals, Distributor-Stock-Check, Detailed request for product, Microsite

Technical Data

Rated Current	8 - 32 A @ Ta 40 °C
Rated voltage	550 VAC: 50/60 Hz
Approval for	8 - 32 A @ Ta 40 °C / 550 VAC; 50 Hz
Overload Current	1.5 x Ir for 1 minute, per hour
Leakage Current	standard < 0.5 mA (440 V / 50 Hz)
Dielectric Strength	550 VAC: 2.25 kVDC between L-L 3 kVDC between L-PE Test voltage (2 sec)
Voltage Rise Rate dU/dt	< 500 V/µs
Weight	1.36 - 7 kg
Material: Housing	Metal
Sealing Compound	UL 94V-0

Mounting	Screw-on mounting on chassis, from top
Terminal	Screw clamps
Operating Temperature	-25 °C to 100 °C
Climatic Category	25/100/21 acc. to IEC 60068-1
Degree of Protection	IP20 acc. to IEC 60529
Protection Class	Suitable for appliances with protection class I acc. to IEC 61140
MTBF	> 200'000 h acc. to MIL-HB-217 F

Approvals and Compliances

Detailed information on product approvals, code requirements, usage instructions and detailed test conditions can be looked up in Details about Approvals

SCHURTER products are designed for use in industrial environments. They have approvals from independent testing bodies according to national and international standards. Products with specific characteristics and requirements such as required in the automotive sector according to IATF 16949, medical technology according to ISO 13485 or in the aerospace industry can be offered exclusively with customer-specific, individual agreements by SCHURTER.

Approvals

The approval mark is used by the testing authorities to certify compliance with the safety requirements placed on electronic products.

Approval Reference Type: FMAC

Approval Logo	Certificates	Certification Body	Description
	VDE Approvals	VDE	Certificate Number: 40004669
	UL Approvals	UL	UL File Number: E72928

Product standards

Product standards that are referenced

Organization	Design	Standard	Description
	Designed according to	IEC 60939	Passive filters for suppressing electromagnetic interference
	Designed according to	UL 1283	Electromagnetic interference filters
	Designed according to	CSA C22.2 no. 8	Electromagnetic interference (EMI) filters

Application standards

Application standards where the product can be used

Organization	Design	Standard	Description
IEC	Designed for applications acc.	IEC/UL 62368-1	Audio/video, information and communication technology equipment - Part 1: Safety requirements

Compliances

The product complies with following Guide Lines

Identification	Details	Initiator	Description
CE	CE declaration of conformity	SCHURTER AG	The CE marking declares that the product complies with the applicable requirements laid down in the harmonisation of Community legislation on its affixing in accordance with EU Regulation 765/2008.
UKCA	UKCA declaration of conformity	SCHURTER AG	The UKCA marking declares that the product complies with the applicable requirements laid down in the British Amendment of Regulation (EC) 765/2008.
RoHS COMPLIANT	RoHS	SCHURTER AG	Directive RoHS 2011/65/EU, Amendment (EU) 2015/863
China RoHS	China RoHS	SCHURTER AG	The law SJ / T 11363-2006 (China RoHS) has been in force since 1 March 2007. It is similar to the EU directive RoHS.
REACH	REACH	SCHURTER AG	On 1 June 2007, Regulation (EC) No 1907/2006 on the Registration, Evaluation, Authorization and Restriction of Chemicals 1 (abbreviated as "REACH") entered into force.

Dimension [mm]

Case 24
I/O connections torque 0.6...0.8 Nm

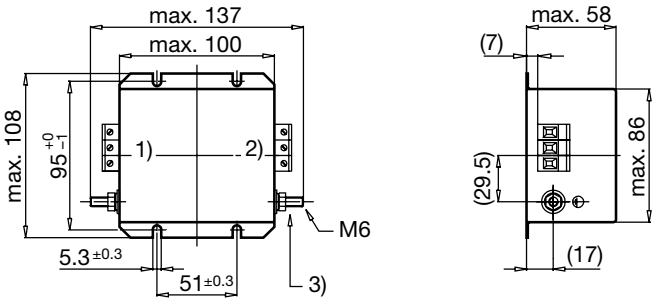

Case 27
I/O connections torque 0.6...0.8 Nm

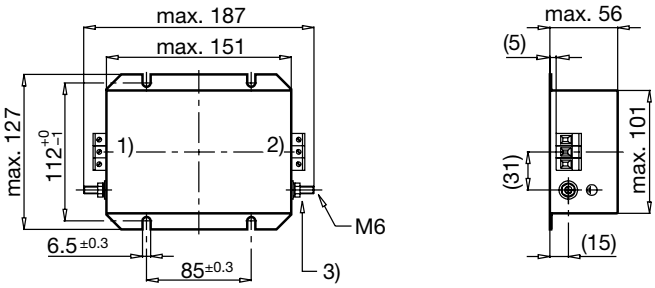

1) Inverter
2) Motor
3) Nut torque 3...4 Nm

Case 38
I/O connections torque 1.5...1.8 Nm

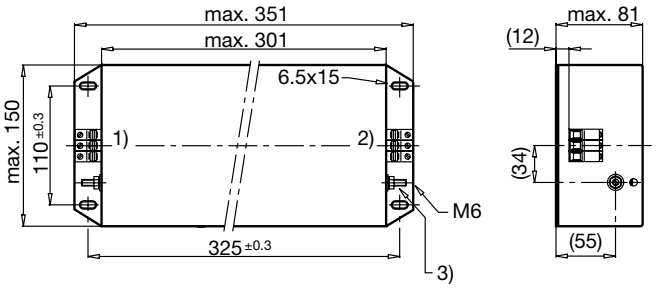

Case 40
I/O connections torque 1.5...1.8 Nm

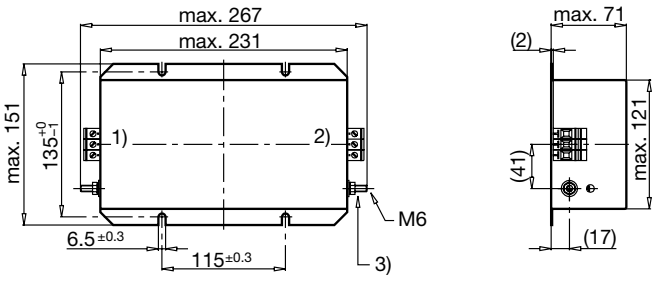

1) Inverter
2) Motor
3) Nut torque 3...4 Nm

Diagrams

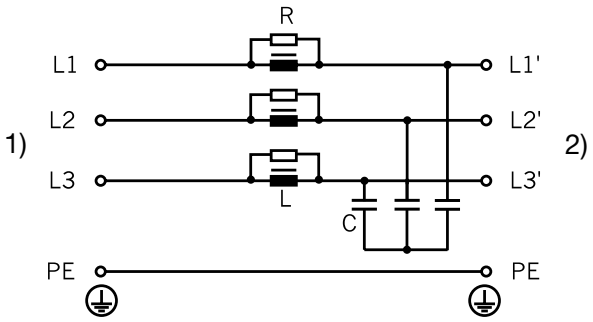

1) Inverter
2) Motor

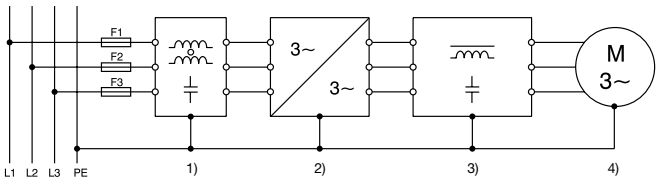

1) Mains Filter
2) Frequency Inverter
3) Output Filter
4) Motor

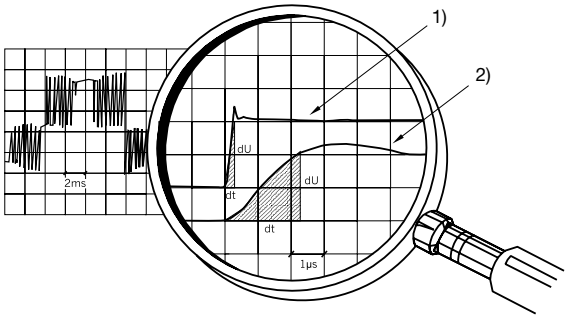

1) without Output Filter
2) with Output Filter

All Variants

Rated Current [A]	Rated Voltage [VAC]	Contact Resistance [mΩ]	L [mH]	C [nF]	Weight	Clamps [mm2]	Housing	Order Number
8	550	22	0.2	4.7	1.4 kg	4	24	FMAC-0A24-0813
16	550	11.6	0.2	4.7	2.4 kg	4	27	FMAC-0A27-1613
25	550	9.2	0.2	4.7	4.7 kg	6	40	FMAC-0A40-2513
32	550	9.2	0.2	4.7	8.1 kg	10	38	FMAC-0A38-3213

Availability for all products can be searched real-time:https://www.schurter.com/en/Stock-Check/Stock-Check-SCHURTER

8A version: packing unit 2 pcs.

Packaging unit 1 Pcs

15.09.2021

The specifications, descriptions and illustrations indicated in this document are based on current information. All content is subject to modifications and amendments. Information furnished is believed to be accurate and reliable. However, users should independently evaluate the suitability and test each product selected for their own applications.