FM28V102A

1-Mbit (64 K × 16) F-RAM Memory

Features

- 1-Mbit ferroelectric random access memory (F-RAM) logically organized as 64 K × 16
  - Configurable as 128 K × 8 using $\overline{UB}$ and $\overline{LB}$
  - High-endurance 100 trillion (10^{14}) read/writes
  - 151-year data retention (see the Data Retention and Endurance table)
  - NoDelay™ writes
  - Page mode operation to 30-ns cycle time
  - Advanced high-reliability ferroelectric process
- SRAM compatible
  - Industry-standard 64 K × 16 SRAM pinout
  - 60-ns access time, 90-ns cycle time
- Superior to battery-backed SRAM modules
  - No battery concerns
  - Monolithic reliability
  - True surface mount solution, no rework steps
  - Superior for moisture, shock, and vibration
- Low power consumption
  - Active current 7 mA (typ)
  - Standby current 120 µA (typ)
  - Sleep mode current 3 µA (typ)
- Low-voltage operation: V_{DD} = 2.0 V to 3.6 V
- Industrial temperature: –40 °C to +85 °C
- 44-pin thin small outline package (TSOP) Type II
- Restriction of hazardous substances (RoHS) compliant

Functional Overview

The FM28V102A is a 64 K × 16 nonvolatile memory that reads and writes similar to a standard SRAM. A ferroelectric random access memory or F-RAM is nonvolatile, which means that data is retained after power is removed. It provides data retention for over 151 years while eliminating the reliability concerns, functional disadvantages, and system design complexities of battery-backed SRAM (BBSRAM). Fast write timing and high write endurance make the F-RAM superior to other types of memory.

The FM28V102A operation is similar to that of other RAM devices and therefore, it can be used as a drop-in replacement for a standard SRAM in a system. Read cycles may be triggered by $\overline{CE}$ or simply by changing the address and write cycles may be triggered by $\overline{CE}$ or $\overline{WE}$. The F-RAM memory is nonvolatile due to its unique ferroelectric memory process. These features make the FM28V102A ideal for nonvolatile memory applications requiring frequent or rapid writes.

The device is available in a 400-mil 44-pin TSOP-II surface mount package. Device specifications are guaranteed over the industrial temperature range –40 °C to +85 °C.

For a complete list of related documentation, click here.

Logic Block Diagram

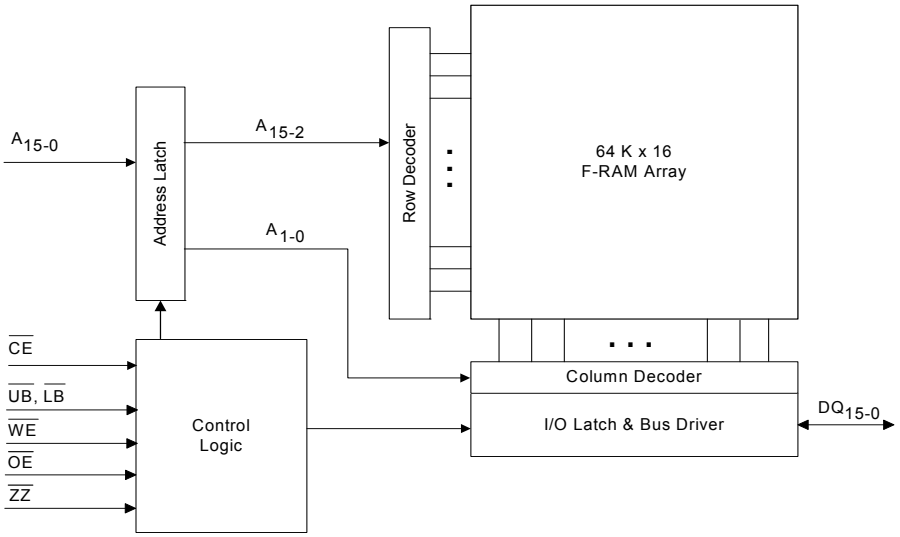

Contents

Pinout **3**
Pin Definitions **3**
Device Operation **4**
Memory Operation 4
Read Operation 4
Write Operation 4
Page Mode Operation 4
Pre-charge Operation 4
Sleep Mode 4
SRAM Drop-In Replacement 5
Endurance 6
Maximum Ratings **7**
Operating Range **7**
DC Electrical Characteristics **7**
Data Retention and Endurance **8**
Capacitance **8**
Thermal Resistance **8**
AC Test Conditions **8**
AC Switching Characteristics **9**
SRAM Read Cycle 9
SRAM Write Cycle 10
Power Cycle and Sleep Mode Timing **14**
Functional Truth Table **15**
Byte Select Truth Table **15**
Ordering Information **16**
Ordering Code Definitions 16
Package Diagram **17**
Acronyms **18**
Document Conventions **18**
Units of Measure 18
Document History Page **19**
Sales, Solutions, and Legal Information **20**
Worldwide Sales and Design Support 20
Products 20
PSoC® Solutions 20
Cypress Developer Community 20
Technical Support 20

Pinout

Figure 1. 44-pin TSOP II pinout

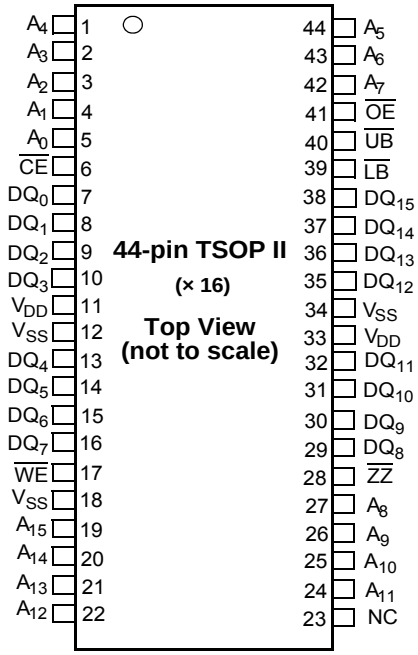

Pin Definitions

Pin Name	I/O Type	Description
A_{15}–A_0	Input	**Address inputs**: The 16 address lines select one of 64K words in the F-RAM array. The lowest two address lines A_1–A_0 may be used for page mode read and write operations.
DQ_{15}–DQ_0	Input/Output	**Data I/O Lines**: 16-bit bidirectional data bus for accessing the F-RAM array.
$\overline{WE}$	Input	**Write Enable**: A write cycle begins when $\overline{WE}$ is asserted. The rising edge causes the FM28V102A to write the data on the DQ bus to the F-RAM array. The falling edge of $\overline{WE}$ latches a new column address for page mode write cycles.
$\overline{CE}$	Input	**Chip Enable**: The device is selected and a new memory access begins on the falling edge of $\overline{CE}$. The entire address is latched internally at this point. Subsequent changes to the A_1–A_0 address inputs allow page mode operation.
$\overline{OE}$	Input	**Output Enable**: When $\overline{OE}$ is LOW, the FM28V102A drives the data bus when the valid read data is available. Deasserting $\overline{OE}$ HIGH tristates the DQ pins.
$\overline{UB}$	Input	**Upper Byte Select**: Enables DQ_{15}–DQ_8 pins during reads and writes. These pins are HI-Z if $\overline{UB}$ is HIGH. If the user does not perform byte writes and the device is not configured as a 128 K × 8, the $\overline{UB}$ and $\overline{LB}$ pins may be tied to ground.
$\overline{LB}$	Input	**Lower Byte Select**: Enables DQ_7–DQ_0 pins during reads and writes. These pins are HI-Z if $\overline{LB}$ is HIGH. If the user does not perform byte writes and the device is not configured as a 128 K × 8, the $\overline{UB}$ and $\overline{LB}$ pins may be tied to ground.
$\overline{ZZ}$	Input	**Sleep**: When $\overline{ZZ}$ is LOW, the device enters a low-power sleep mode for the lowest supply current condition. $\overline{ZZ}$ must be HIGH for a normal read/write operation. This pin must be tied to V_{DD} if not used.
V_{SS}	Ground	Ground for the device. Must be connected to the ground of the system.
V_{DD}	Power supply	Power supply input to the device.
NC	No connect	No connect. This pin is not connected to the die.

Device Operation

The FM28V102A is a word wide F-RAM memory logically organized as 65,536 × 16 and accessed using an industry-standard parallel interface. All data written to the part is immediately nonvolatile with no delay. The device offers page mode operation, which provides high-speed access to addresses within a page (row). Access to a different page requires that either $\overline{CE}$ transitions LOW or the upper address (A_{15}–A_2) changes. See the Functional Truth Table on page 15 for a complete description of read and write modes.

Memory Operation

Users access 65,536 memory locations, each with 16 data bits through a parallel interface. The F-RAM array is organized as 16,384 rows each having 64 bits. Each row has four column locations, which allow fast access in page mode operation. When an initial address is latched by the falling edge of $\overline{CE}$, subsequent column locations may be accessed without the need to toggle $\overline{CE}$. When $\overline{CE}$ is deasserted HIGH, a pre-charge operation begins. Writes occur immediately at the end of the access with no delay. The $\overline{WE}$ pin must be toggled for each write operation. The write data is stored in the nonvolatile memory array immediately, which is a feature unique to F-RAM called NoDelay writes.

Read Operation

A read operation begins on the falling edge of $\overline{CE}$. The falling edge of $\overline{CE}$ causes the address to be latched and starts a memory read cycle if $\overline{WE}$ is HIGH. Data becomes available on the bus after the access time is met. When the address is latched and the access completed, a new access to a random location (different row) may begin while $\overline{CE}$ is still LOW. The minimum cycle time for random addresses is t_{RC}. Note that unlike SRAMs, the FM28V102A's $\overline{CE}$-initiated access time is faster than the address access time.

The FM28V102A will drive the data bus when $\overline{OE}$ and at least one of the byte enables ($\overline{UB}$, $\overline{LB}$) is asserted LOW. The upper data byte is driven when $\overline{UB}$ is LOW, and the lower data byte is driven when $\overline{LB}$ is LOW. If $\overline{OE}$ is asserted after the memory access time is met, the data bus will be driven with valid data. If $\overline{OE}$ is asserted before completing the memory access, the data bus will not be driven until valid data is available. This feature minimizes supply current in the system by eliminating transients caused by invalid data being driven to the bus. When $\overline{OE}$ is deasserted HIGH, the data bus will remain in a HI-Z state.

Write Operation

In the FM28V102A, writes occur in the same interval as reads. The FM28V102A supports both $\overline{CE}$ and $\overline{WE}$ controlled write cycles. In both cases, the address A_{15}–A_2 is latched on the falling edge of $\overline{CE}$.

In a $\overline{CE}$-controlled write, the $\overline{WE}$ signal is asserted before beginning the memory cycle. That is, $\overline{WE}$ is LOW when $\overline{CE}$ falls. In this case, the device begins the memory cycle as a write. The FM28V102A will not drive the data bus regardless of the state of $\overline{OE}$ as long as $\overline{WE}$ is LOW. Input data must be valid when $\overline{CE}$ is deasserted HIGH. In a $\overline{WE}$-controlled write, the memory cycle begins on the falling edge of $\overline{CE}$. The $\overline{WE}$ signal falls some time later. Therefore, the memory cycle begins as a read. The data bus will be driven if $\overline{OE}$ is LOW; however, it will be HI-Z when $\overline{WE}$ is asserted LOW. The $\overline{CE}$- and $\overline{WE}$-controlled write timing cases are shown in the Switching Waveforms on page 13.

Write access to the array begins on the falling edge of $\overline{WE}$ after the memory cycle is initiated. The write access terminates on the rising edge of $\overline{WE}$ or $\overline{CE}$, whichever comes first. A valid write operation requires the user to meet the access time specification before deasserting $\overline{WE}$ or $\overline{CE}$. The data setup time indicates the interval during which data cannot change before the end of the write access (rising edge of $\overline{WE}$ or $\overline{CE}$).

Unlike other nonvolatile memory technologies, there is no write delay with F-RAM. Because the read and write access times of the underlying memory are the same, the user experiences no delay through the bus. The entire memory operation occurs in a single bus cycle. Data polling, a technique used with EEPROMs to determine if a write is complete, is unnecessary.

Page Mode Operation

The F-RAM array is organized as 16,384 rows each having 64 bits. Each row has four column-address locations. Address inputs A_1–A_0 define the column address to be accessed. An access can start on any column address, and other column locations may be accessed without the need to toggle the $\overline{CE}$ pin. For fast access reads, after the first data byte is driven to the bus, the column address inputs A_1–A_0 may be changed to a new value. A new data byte is then driven to the DQ pins no later than t_{AAP}, which is less than half the initial read access time. For fast access writes, the first write pulse defines the first write access. While $\overline{CE}$ is LOW, a subsequent write pulse along with a new column address provides a page mode write access.

Pre-charge Operation

The pre-charge operation is an internal condition in which the memory state is prepared for a new access. Pre-charge is user-initiated by driving the $\overline{CE}$ signal HIGH. It must remain HIGH for at least the minimum pre-charge time, t_{PC}.

Pre-charge is also activated by changing the upper addresses, A_{15}–A_2. The current row is first closed before accessing the new row. The device automatically detects an upper order address change, which starts a pre-charge operation. The new address is latched and the new read data is valid within the t_{AA} address access time; see Figure 6 on page 11. A similar sequence occurs for write cycles; see Figure 11 on page 12. The rate at which random addresses can be issued is t_{RC} and t_{WC}, respectively.

Sleep Mode

The device incorporates a sleep mode of operation, which allows the user to achieve the lowest power supply current condition. It enters a low-power sleep mode by asserting the $\overline{ZZ}$ pin LOW. Read and write operations must complete before the $\overline{ZZ}$ pin going LOW. When $\overline{ZZ}$ is LOW, all pins are ignored except the $\overline{ZZ}$ pin. When $\overline{ZZ}$ is deasserted HIGH, there is some time delay (t_{ZZEX}) before the user can access the device. If sleep mode is not used, the $\overline{ZZ}$ pin must be tied to V_{DD}

Figure 2. Sleep/Standby State Diagram

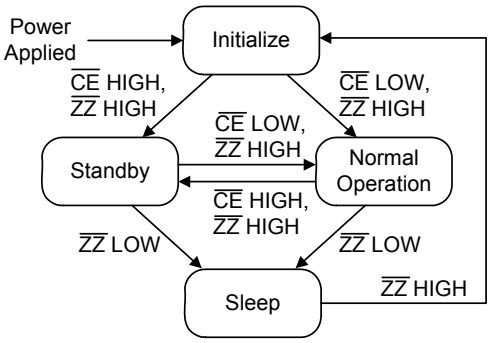

SRAM Drop-In Replacement

The FM28V102A is designed to be a drop-in replacement for standard asynchronous SRAMs. The device does not require $\overline{CE}$ to toggle for each new address. $\overline{CE}$ may remain LOW indefinitely. While $\overline{CE}$ is LOW, the device automatically detects address changes and a new access begins. This functionality allows $\overline{CE}$ to be grounded, similar to an SRAM. It also allows page mode operation at speeds up to 33 MHz.

Figure 3 shows a pull-up resistor on $\overline{CE}$, which will keep the pin HIGH during power cycles, assuming the MCU / MPU pin tristates during the reset condition. The pull-up resistor value should be chosen to ensure the $\overline{CE}$ pin tracks V_{DD} to a high enough value, so that the current drawn when $\overline{CE}$ is LOW is not an issue. A 10-kΩ resistor draws 330 µA when $\overline{CE}$ is LOW and V_{DD} = 3.3 V

Figure 3. Use of Pull-up Resistor on $\overline{CE}$

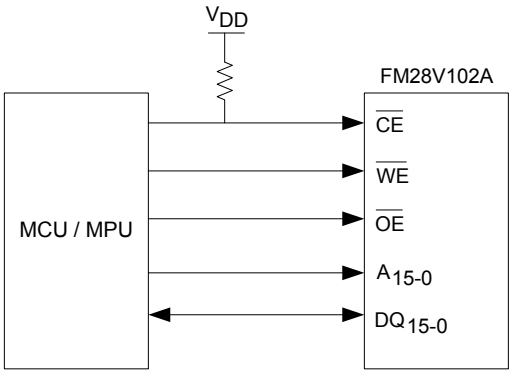

Note that if $\overline{CE}$ is tied to ground, the user must be sure $\overline{WE}$ is not LOW at power-up or power-down events. If $\overline{CE}$ and $\overline{WE}$ are both LOW during power cycles, data will be corrupted. Figure 4 shows a pull-up resistor on $\overline{WE}$, which will keep the pin HIGH during power cycles, assuming the MCU/MPU pin tristates during the reset condition.The pull-up resistor value should be chosen to ensure the $\overline{WE}$ pin tracks V_{DD} to a high enough value, so that the current drawn when $\overline{WE}$ is LOW is not an issue. A 10-kΩ resistor draws 330 µA when $\overline{WE}$ is LOW and V_{DD} = 3.3 V.

Figure 4. Use of Pull-up Resistor on $\overline{WE}$

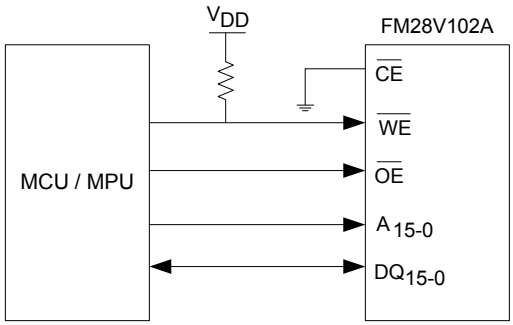

For applications that require the lowest power consumption, the $\overline{CE}$ signal should be active (LOW) only during memory accesses. The FM28V102A draws supply current while $\overline{CE}$ is LOW, even if addresses and control signals are static. While $\overline{CE}$ is HIGH, the device draws no more than the maximum standby current, I_{SB}.

The $\overline{UB}$ and $\overline{LB}$ byte select pins are active for both read and write cycles. They may be used to allow the device to be wired as a 128 K × 8 memory. The upper and lower data bytes can be tied together and controlled with the byte selects. Individual byte enables or the next higher address line A_{16} may be available from the system processor.

Figure 5. FM28V102A Wired as 128 K x 8

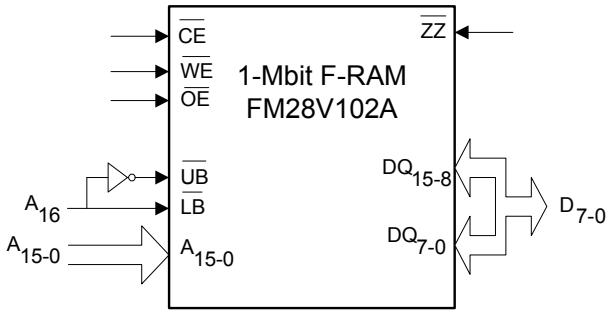

Endurance

The FM28V102A is capable of being accessed at least 10^{14} times – reads or writes. An F-RAM memory operates with a read and restore mechanism. Therefore, an endurance cycle is applied on a row basis. The F-RAM architecture is based on an array of rows and columns. Rows are defined by A_{15-2} and column addresses by A_{1-0}. The array is organized as 16K rows of four words each. The entire row is internally accessed once whether a single 16-bit word or all four words are read or written. Each word in the row is counted only once in an endurance calculation.

The user may choose to write CPU instructions and run them from a certain address space. Table 1 shows endurance calculations for a 256-byte repeating loop, which includes a starting address, three-page mode accesses, and a $\overline{CE}$ pre-charge. The number of bus clock cycles needed to complete a four-word transaction is 4 + 1 at lower bus speeds, but 5 + 2 at 33 MHz due to initial read latency and an extra clock cycle to satisfy the device's pre-charge timing constraint t_{PC}. The entire loop causes each byte to experience only one endurance cycle. The F-RAM read and write endurance is virtually unlimited even at a 33-MHz system bus clock rate.

Table 1. Time to Reach 100 Trillion Cycles for Repeating 256-byte Loop

Bus Freq (MHz)	Bus Cycle Time (ns)	256-byte Transaction Time (µs)	Endurance Cycles/sec	Endurance Cycles/year	Years to Reach 10^{14} Cycles
33	30	10.56	94,690	2.98×10^{12}	33.5
25	40	12.8	78,125	2.46×10^{12}	40.6
10	100	28.8	34,720	1.09×10^{12}	91.7
5	200	57.6	17,360	5.47×10^{11}	182.8

Maximum Ratings

Exceeding maximum ratings may shorten the useful life of the device. These user guidelines are not tested.

Storage temperature ..... –55 °C to +125 °C

Maximum accumulated storage time
At 125 °C ambient temperature ..... 1000 h
At 85 °C ambient temperature ..... 10 Years

Ambient temperature
with power applied ..... –55 °C to +125 °C

Supply voltage on V_{DD} relative to V_{SS} .....–1.0 V to + 4.5 V

Voltage applied to outputs
in High Z state ..... –0.5 V to V_{DD} + 0.5 V

Input voltage ..... –1.0 V to + 4.5 V and $V_{IN} < V_{DD}$ + 1.0 V

Transient voltage (< 20 ns) on
any pin to ground potential ..... –2.0 V to V_{CC} + 2.0 V

Package power dissipation
capability (T_A = 25 °C) ..... 1.0 W

Surface mount Pb soldering
temperature (3 seconds) ..... +260 °C

DC output current (1 output at a time, 1s duration) .... 15 mA

Static discharge voltage
Human Body Model (AEC-Q100-002 Rev. E) ..... 2 kV

Charged Device Model (AEC-Q100-011 Rev. B) ..... 500 V

Latch-up current ..... > 140 mA

Operating Range

Range	Ambient Temperature (T_A)	V_{DD}
Industrial	–40 °C to +85 °C	2.0 V to 3.6 V

DC Electrical Characteristics

Over the Operating Range

Parameter	Description	Test Conditions		Min	Typ [1]	Max	Unit
V_{DD}	Power supply voltage			2.0	3.3	3.6	V
I_{DD}	V_{DD} supply current	V_{DD} = 3.6 V, $\overline{CE}$ cycling at min. cycle time. All inputs toggling at CMOS levels (0.2 V or V_{DD} – 0.2 V), all DQ pins unloaded.		–	7	12	mA
I_{SB}	Standby current	V_{DD} = 3.6 V, $\overline{CE}$ at V_{DD}, All other pins are static and at CMOS levels (0.2 V or V_{DD} – 0.2 V), $\overline{ZZ}$ is HIGH	T_A = 25 °C	–	120	150	µA
			T_A = 85 °C	–	–	250	µA
I_{ZZ}	Sleep mode current	V_{DD} = 3.6 V, $\overline{ZZ}$ is LOW, All other inputs V_{SS} or V_{DD}.	T_A = 25 °C	–	3	5	µA
			T_A = 85 °C	–	–	8	µA
I_{LI}	Input leakage current	V_{IN} between V_{DD} and V_{SS}		–	–	±1	µA
I_{LO}	Output leakage current	V_{OUT} between V_{DD} and V_{SS}		–	–	±1	µA
V_{IH1}	Input HIGH voltage	V_{DD} = 2.7 V to 3.6 V		2.2	–	V_{DD} + 0.3	V
V_{IH2}	Input HIGH voltage	V_{DD} = 2.0 V to 2.7 V		0.7 × V_{DD}	–	–	V
V_{IL1}	Input LOW voltage	V_{DD} = 2.7 V to 3.6 V		– 0.3	–	0.8	V
V_{IL2}	Input LOW voltage	V_{DD} = 2.0 V to 2.7 V		– 0.3	–	0.3 × V_{DD}	V
V_{OH1}	Output HIGH voltage	I_{OH} = –1 mA, V_{DD} > 2.7 V		2.4	–	–	V
V_{OH2}	Output HIGH voltage	I_{OH} = –100 µA		V_{DD} – 0.2	–	–	V
V_{OL1}	Output LOW voltage	I_{OL} = 2 mA, V_{DD} > 2.7 V		–	–	0.4	V
V_{OL2}	Output LOW voltage	I_{OL} = 150 µA		–	–	0.2	V

Note
1. Typical values are at 25 °C, V_{DD} = V_{DD} (typ). Not 100% tested.

Data Retention and Endurance

Parameter	Description	Test condition	Min	Max	Unit
T_{DR}	Data retention	T_A = 85 °C	10	–	Years
		T_A = 75 °C	38	–	
		T_A = 65 °C	151	–	
NV_C	Endurance	Over operating temperature	10^{14}	–	Cycles

Capacitance

Parameter	Description	Test Conditions	Max	Unit
$C_{I/O}$	Input/Output capacitance (DQ)	T_A = 25 °C, f = 1 MHz, $V_{DD} = V_{DD(Typ)}$	8	pF
C_{IN}	Input capacitance		6	pF
C_{ZZ}	Input capacitance of $\overline{ZZ}$ pin		8	pF

Thermal Resistance

Parameter	Description	Test Conditions	44-pin TSOP II	Unit
Θ_{JA}	Thermal resistance (junction to ambient)	Test conditions follow standard test methods and procedures for measuring thermal impedance, in accordance with EIA/JESD51.	107	°C/W
Θ_{JC}	Thermal resistance (junction to case)		25	°C/W

AC Test Conditions

Input pulse levels .....0 V to 3 V
Input rise and fall times (10%–90%) ..... $\leq$ 3 ns
Input and output timing reference levels .....1.5 V
Output load capacitance..... 30 pF

AC Switching Characteristics

Over the Operating Range

Parameters [2]		Description	V_{DD} = 2.0 V to 2.7 V		V_{DD} = 2.7 V to 3.6 V		Unit
Cypress Parameter	Alt Parameter		Min	Max	Min	Max	
SRAM Read Cycle							
t_{CE}	t_{ACE}	Chip enable access time	–	70	–	60	ns
t_{RC}	–	Read cycle time	105	–	90		ns
t_{AA}	–	Address access time, A_{15-2}	–	105	–	90	ns
t_{OH}	t_{OHA}	Output hold time, A_{15-2}	20	–	20	–	ns
t_{AAP}	–	Page mode access time, A_{1-0}	–	40	–	30	ns
t_{OHP}	–	Page mode output hold time, A_{1-0}	3	–	3	–	ns
t_{CA}	–	Chip enable active time	70	–	60	–	ns
t_{PC}	–	Pre-charge time	35	–	30	–	ns
t_{BA}	t_{BW}	$\overline{UB}$, $\overline{LB}$ access time	–	25	–	15	ns
t_{AS}	t_{SA}	Address setup time (to $\overline{CE}$ LOW)	0	–	0	–	ns
t_{AH}	t_{HA}	Address hold time ($\overline{CE}$ Controlled)	70	–	60	–	ns
t_{OE}	t_{DOE}	Output enable access time	–	25	–	15	ns
t_{HZ}[3, 4]	t_{HZCE}	Chip Enable to output HI-Z	–	15	–	10	ns
t_{OHZ}[3, 4]	t_{HZOE}	Output enable HIGH to output HI-Z	–	15	–	10	ns
t_{BHZ}[3, 4]	t_{HZBE}	$\overline{UB}$, $\overline{LB}$ HIGHHIGH to output HI-Z	–	15	–	10	ns

Notes
2. Test conditions assume a signal transition time of 3 ns or less, timing reference levels of 0.5 × V_{DD}, input pulse levels of 0 to 3 V, output loading of the specified I_{OL}/I_{OH} and load capacitance shown in AC Test Conditions on page 8.
3. t_{HZ}, t_{OHZ} and t_{BHZ} are specified with a load capacitance of 5 pF. Transition is measured when the outputs enter a high impedance state.
4. This parameter is characterized but not 100% tested.

AC Switching Characteristics (continued)

Over the Operating Range

Parameters [2]		Description	V_{DD} = 2.0 V to 2.7 V		V_{DD} = 2.7 V to 3.6 V		Unit
Cypress Parameter	Alt Parameter		Min	Max	Min	Max	
SRAM Write Cycle							
t_{WC}	t_{WC}	Write cycle time	105	–	90	–	ns
t_{CA}	–	Chip enable active time	70	–	60	–	ns
t_{CW}	t_{SCE}	Chip enable to write enable HIGH	70	–	60	–	ns
t_{PC}	–	Pre-charge time	35	–	30	–	ns
t_{PWC}	–	Page mode write enable cycle time	40	–	30	–	ns
t_{WP}	t_{PWE}	Write enable pulse width	22	–	18	–	ns
t_{WP2}	t_{BW}	$\overline{UB}$, $\overline{LB}$ pulse width	22	–	18	–	ns
t_{WP3}	t_{PWE}	$\overline{WE}$ LOW to $\overline{UB}$, $\overline{LB}$ HIGH	22	–	18	–	ns
t_{AS}	t_{SA}	Address setup time (to $\overline{CE}$ LOW)	0	–	0	–	ns
t_{AH}	t_{HA}	Address hold time ($\overline{CE}$ Controlled)	70	–	60	–	ns
t_{ASP}	–	Page mode address setup time (to $\overline{WE}$ LOW)	8	–	5	–	ns
t_{AHP}	–	Page mode address hold time (to $\overline{WE}$ LOW)	20	–	15	–	ns
t_{WLC}	t_{PWE}	Write enable LOW to chip disabled	30	–	25	–	ns
t_{BLC}	t_{BW}	$\overline{UB}$, $\overline{LB}$ LOW to chip disabled	30	–	25	–	ns
t_{WLA}	–	Write enable LOW to address change, A_{15-2}	30	–	25	–	ns
t_{AWH}	–	Address change to write enable HIGH, A_{15-2}	105	–	90	–	ns
t_{DS}	t_{SD}	Data input setup time	20	–	15	–	ns
t_{DH}	t_{HD}	Data input hold time	0	–	0	–	ns
t_{WZ}[5, 6]	t_{HZWE}	Write enable LOW to output HI-Z	–	10	–	10	ns
t_{WX}[6]	–	Write enable HIGH to output driven	8	–	5	–	ns
t_{BDS}	–	Byte disable setup time (to $\overline{WE}$ LOW)	8	–	5	–	ns
t_{BDH}	–	Byte disable hold time (to $\overline{WE}$ HIGH)	8	–	5	–	ns

Notes
5. t_{WZ} is specified with a load capacitance of 5 pF. Transition is measured when the outputs enter a high impedance state.
6. This parameter is characterized but not 100% tested.

Figure 6. Read Cycle Timing 1 ($\overline{CE}$ LOW, $\overline{OE}$ LOW)

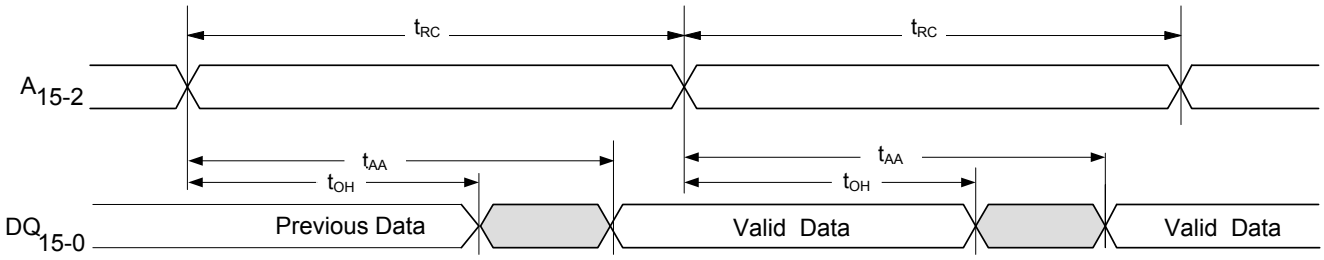

Figure 7. Read Cycle Timing 2 ($\overline{CE}$ Controlled)

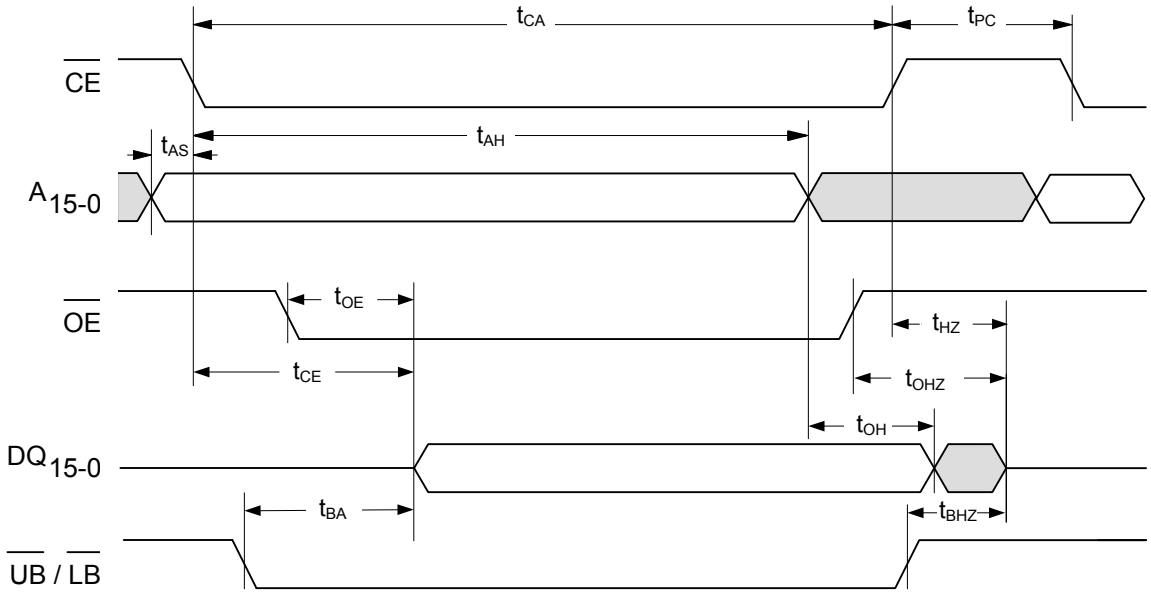

Figure 8. Page Mode Read Cycle Timing [7]

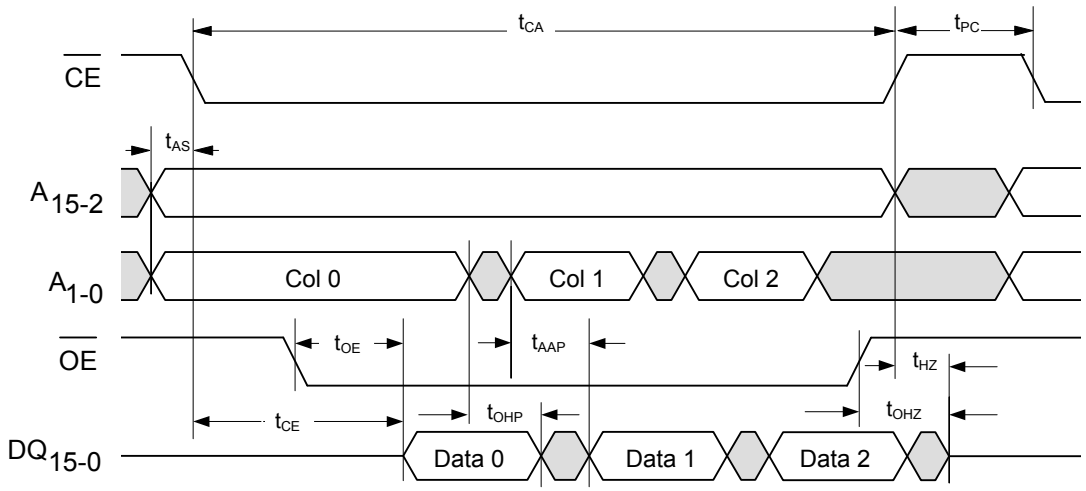

Note
7. Although sequential column addressing is shown, it is not required.

Figure 9. Write Cycle Timing 1 ($\overline{WE}$ Controlled) [8]

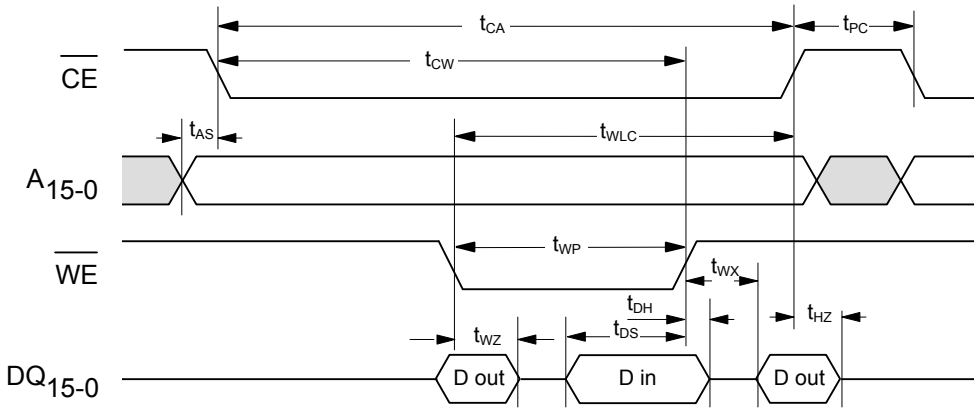

Figure 10. Write Cycle Timing 2 ($\overline{CE}$ Controlled)

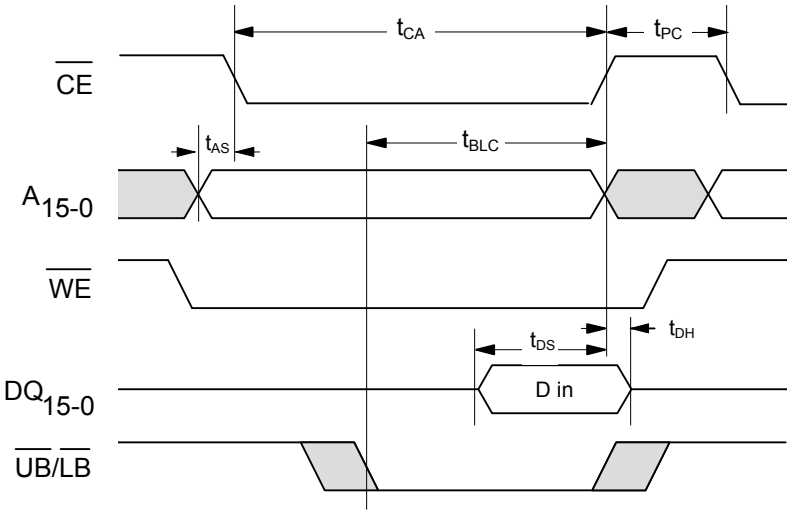

Figure 11. Write Cycle Timing 3 ($\overline{CE}$ LOW) [8]

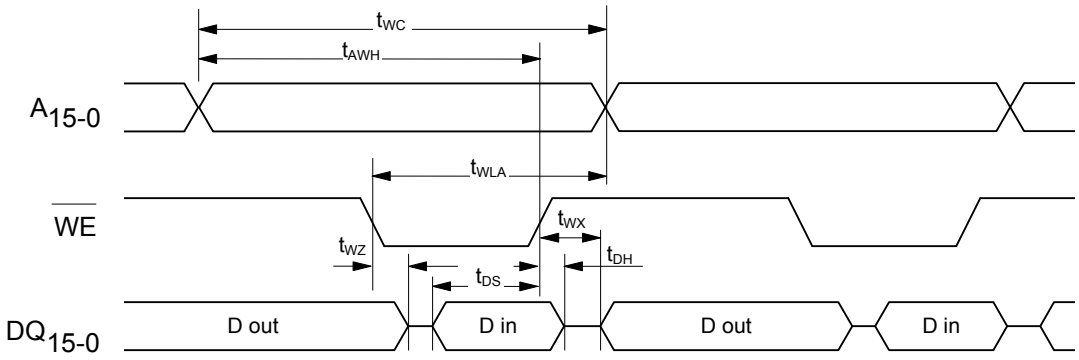

Note
8. $\overline{OE}$ (not shown) is LOW only to show the effect of $\overline{WE}$ on DQ pins.

Figure 12. Write Cycle Timing 4 ($\overline{CE}$ LOW) [9]

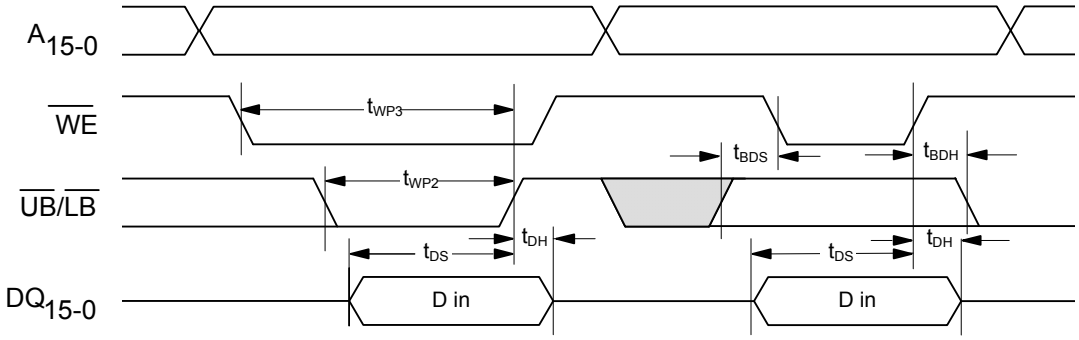

Figure 13. Page Mode Write Cycle Timing

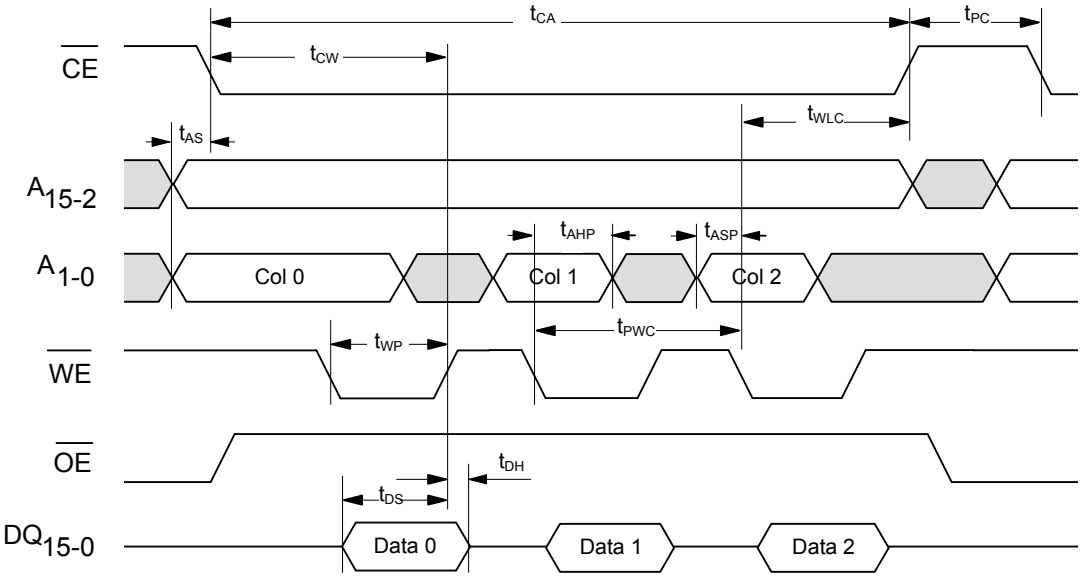

Note
9. $\overline{UB}$ and $\overline{LB}$ to show byte enable and byte masking cases.

Power Cycle and Sleep Mode Timing

Over the Operating Range

Parameter	Description	Min	Max	Unit
t_{PU}	Power-up (after V_{DD} min. is reached) to first access time	1	–	ms
t_{PD}	Last write ($\overline{WE}$ HIGH) to power down time	0	–	µs
t_{VR}[10]	V_{DD} power-up ramp rate	50	–	µs/V
t_{VF}[10]	V_{DD} power-down ramp rate	100	–	µs/V
t_{ZZH}	$\overline{ZZ}$ active to DQ HI-Z time	–	20	ns
t_{WEZZ}	Last write to sleep mode entry time	0	–	µs
t_{ZZL}	$\overline{ZZ}$ active LOW time	1	–	µs
t_{ZZEN}	Sleep mode entry time ($\overline{ZZ}$ LOW to $\overline{CE}$ don't care)	–	0	µs
t_{ZZEX}	Sleep mode exit time ($\overline{ZZ}$ HIGH to 1st access after wakeup)	–	450	µs

Figure 14. Power Cycle and Sleep Mode Timing

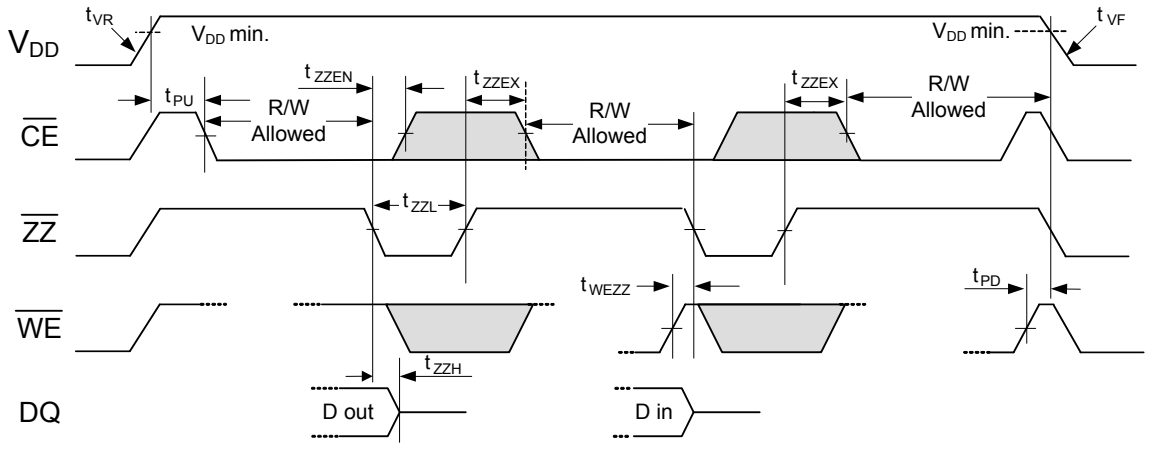

Note
10. Slope measured at any point on the V_{DD} waveform.

Functional Truth Table

$\overline{CE}$	$\overline{WE}$	A_{15-2}	A_{1-0}	$\overline{ZZ}$	Operation [11, 12]
X	X	X	X	L	Sleep Mode
H	X	X	X	H	Standby/Idle
↓ L	H H	V V	V V	H H	Read
L	H	No Change	Change	H	Page Mode Read
L	H	Change	V	H	Random Read
↓ L	L L	V V	V V	H H	$\overline{CE}$-Controlled Write[12]
L	↓	V	V	H	$\overline{WE}$-Controlled Write [12, 13]
L	↓	No Change	V	H	Page Mode Write [14]
↑ L	X X	X X	X X	H H	Starts pre-charge

Byte Select Truth Table

$\overline{WE}$	$\overline{OE}$	$\overline{LB}$	$\overline{UB}$	Operation [15]
H	H	X	X	Read; Outputs disabled
	X	H	H	
H	L	H	L	Read upper byte; HI-Z lower byte
		L	H	Read lower byte; HI-Z upper byte
		L	L	Read both bytes
L	X	H	L	Write upper byte; Mask lower byte
		L	H	Write lower byte; Mask upper byte
		L	L	Write both bytes

Notes
11. H = Logic HIGH, L = Logic LOW, V = Valid Data, X = Don't Care, ↓ = toggle LOW, ↑ = toggle HIGH.
12. For write cycles, data-in is latched on the rising edge of $\overline{CE}$ or $\overline{WE}$, whichever comes first.
13. $\overline{WE}$-controlled write cycle begins as a Read cycle and then A_{15-2} is latched.
14. Addresses A_{1-0} must remain stable for at least 15 ns during page mode operation.
15. The $\overline{UB}$ and $\overline{LB}$ pins may be grounded if 1) the system does not perform byte writes and 2) the device is not configured as a 128 K x 8.

Ordering Information

Access time (ns)	Ordering Code	Package Diagram	Package Type	Operating Range
60	FM28V102A-TG	51-85087	44-pin TSOP II	Industrial
	FM28V102A-TGTR			

All the above parts are Pb-free.

Ordering Code Definitions

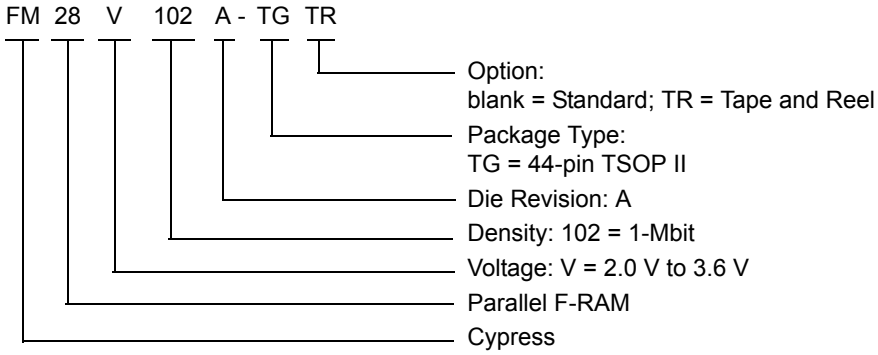

Package Diagram

Figure 15. 44-pin TSOP Package Outline, 51-85087

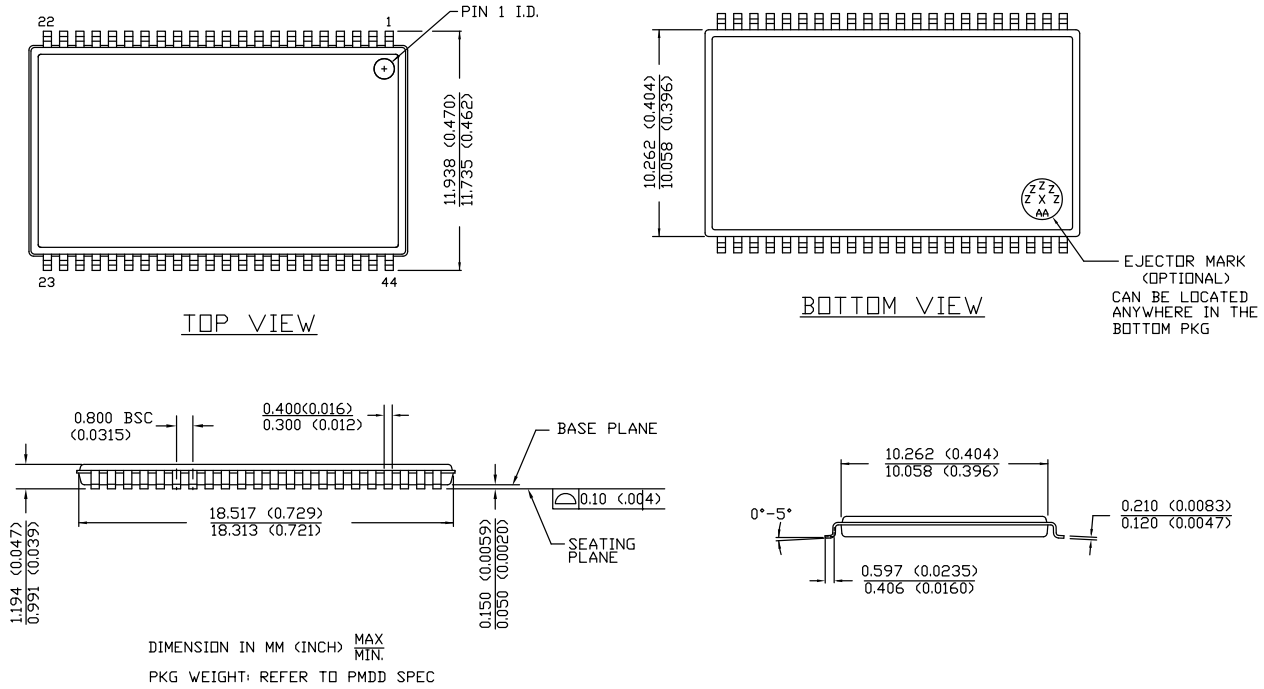

51-85087 *E

Acronyms

Acronym	Description
$\overline{UB}$	Upper Byte
$\overline{LB}$	Lower Byte
$\overline{CE}$	Chip Enable
CMOS	Complementary Metal Oxide Semiconductor
EIA	Electronic Industries Alliance
F-RAM	Ferroelectric Random Access Memory
I/O	Input/Output
$\overline{OE}$	Output Enable
RoHS	Restriction of Hazardous Substances
RW	Read and Write
SRAM	Static Random Access Memory
TSOP	Thin Small Outline Package
$\overline{WE}$	Write Enable

Document Conventions

Units of Measure

Symbol	Unit of Measure
°C	degree Celsius
Hz	hertz
kHz	kilohertz
kΩ	kilohm
MHz	megahertz
µA	microampere
µF	microfarad
µs	microsecond
mA	milliampere
ms	millisecond
MΩ	megaohm
ns	nanosecond
Ω	ohm
%	percent
pF	picofarad
V	volt
W	watt

Document History Page

Document Title: FM28V102A, 1-Mbit (64 K × 16) F-RAM Memory Document Number: 001-91080				
Rev.	**ECN No.**	**Orig. of Change**	**Submission Date**	**Description of Change**
**	4272603	GVCH	03/11/2014	New data sheet.
*A	4372700	GVCH	05/07/2014	Changed datasheet status from “Preliminary to Final” Maximum Ratings: Static discharge voltage Removed Machine Model DC Electrical Characteristics: Updated I_{ZZ} test condition Updated Figure 6 for more clarity Removed FM28V102A-TGES part
*B	4375244	GVCH	06/30/2014	Pin Definitions: $\overline{ZZ}$ pin Added sentence: This pin must be tied to V_{DD} if not used Removed sentence: The $\overline{ZZ}$ pin is internally pulled up DC Electrical Characteristics:Removed R_{IN} spec
*C	4562106	GVCH	11/5/2014	Added related documentation hyperlink in page 1.
*D	4683470	GVCH	03/11/2015	Typo fixed (Features): Removed “Software-programmable block write-protect feature”
*E	4881722	ZSK / PSR	08/12/2015	Updated Maximum Ratings: Removed “Maximum junction temperature”. Added “Maximum accumulated storage time”. Added “Ambient temperature with power applied”. Updated to new template.

Sales, Solutions, and Legal Information

Worldwide Sales and Design Support

Cypress maintains a worldwide network of offices, solution centers, manufacturer's representatives, and distributors. To find the office closest to you, visit us at Cypress Locations.

Products

Automotive	cypress.com/go/automotive
Clocks & Buffers	cypress.com/go/clocks
Interface	cypress.com/go/interface
Lighting & Power Control	cypress.com/go/powerpsoc
Memory	cypress.com/go/memory
PSoC	cypress.com/go/psoc
Touch Sensing	cypress.com/go/touch
USB Controllers	cypress.com/go/USB
Wireless/RF	cypress.com/go/wireless

PSoC® Solutions

psoc.cypress.com/solutions

PSoC 1 | PSoC 3 | PSoC 4 | PSoC 5LP

Cypress Developer Community

Community | Forums | Blogs | Video | Training

Technical Support

cypress.com/go/support

© Cypress Semiconductor Corporation, 2014-2015. The information contained herein is subject to change without notice. Cypress Semiconductor Corporation assumes no responsibility for the use of any circuitry other than circuitry embodied in a Cypress product. Nor does it convey or imply any license under patent or other rights. Cypress products are not warranted nor intended to be used for medical, life support, life saving, critical control or safety applications, unless pursuant to an express written agreement with Cypress. Furthermore, Cypress does not authorize its products for use as critical components in life-support systems where a malfunction or failure may reasonably be expected to result in significant injury to the user. The inclusion of Cypress products in life-support systems application implies that the manufacturer assumes all risk of such use and in doing so indemnifies Cypress against all charges.

Any Source Code (software and/or firmware) is owned by Cypress Semiconductor Corporation (Cypress) and is protected by and subject to worldwide patent protection (United States and foreign), United States copyright laws and international treaty provisions. Cypress hereby grants to licensee a personal, non-exclusive, non-transferable license to copy, use, modify, create derivative works of, and compile the Cypress Source Code and derivative works for the sole purpose of creating custom software and or firmware in support of licensee product to be used only in conjunction with a Cypress integrated circuit as specified in the applicable agreement. Any reproduction, modification, translation, compilation, or representation of this Source Code except as specified above is prohibited without the express written permission of Cypress.

Disclaimer: CYPRESS MAKES NO WARRANTY OF ANY KIND, EXPRESS OR IMPLIED, WITH REGARD TO THIS MATERIAL, INCLUDING, BUT NOT LIMITED TO, THE IMPLIED WARRANTIES OF MERCHANTABILITY AND FITNESS FOR A PARTICULAR PURPOSE. Cypress reserves the right to make changes without further notice to the materials described herein. Cypress does not assume any liability arising out of the application or use of any product or circuit described herein. Cypress does not authorize its products for use as critical components in life-support systems where a malfunction or failure may reasonably be expected to result in significant injury to the user. The inclusion of Cypress' product in a life-support systems application implies that the manufacturer assumes all risk of such use and in doing so indemnifies Cypress against all charges.

Use may be limited by and subject to the applicable Cypress software license agreement.

All products and company names mentioned in this document may be the trademarks of their respective holders.