FM25L16

16Kb FRAM Serial 3V Memory

Features

16K bit Ferroelectric Nonvolatile RAM
- Organized as 2,048 x 8 bits
- Unlimited Read/Write Cycles
- 45 Year Data Retention
- NoDelay™ Writes
- Advanced High-Reliability Ferroelectric Process

Very Fast Serial Peripheral Interface - SPI
- Up to 20 MHz Frequency
- Direct Hardware Replacement for EEPROM
- SPI Mode 0 & 3 (CPOL, CPHA=0,0 & 1,1)

Sophisticated Write Protection Scheme
- Hardware Protection
- Software Protection

Low Power Consumption
- Low Voltage Operation 2.7-3.6V
- 1 µA Standby Current

Industry Standard Configuration
- Industrial Temperature -40°C to +85°C
- "Green" 8-pin SOIC and 8-pin DFN Packages
- DFN Footprint Conforms to TSSOP-8

Description

The FM25L16 is a 16-kilobit nonvolatile memory employing an advanced ferroelectric process. A ferroelectric random access memory or FRAM is nonvolatile and performs reads and writes like a RAM. It provides reliable data retention for 45 years while eliminating the complexities, overhead, and system level reliability problems caused by EEPROM and other nonvolatile memories.

Unlike serial EEPROMs, the FM25L16 performs write operations at bus speed. No write delays are incurred. The next bus cycle may commence immediately without the need for data polling. The next bus cycle may start immediately. In addition, the product offers virtually unlimited write endurance, orders of magnitude more endurance than EEPROM. Also, FRAM exhibits much lower power during writes than EEPROM since write operations do not require an internally elevated power supply voltage for write circuits.

These capabilities make the FM25L16 ideal for nonvolatile memory applications requiring frequent or rapid writes. Examples range from data collection, where the number of write cycles may be critical, to demanding industrial controls where the long write time of EEPROM can cause data loss.

The FM25L16 provides substantial benefits to users of serial EEPROM as a hardware drop-in replacement. The FM25L16 uses the high-speed SPI bus, which enhances the high-speed write capability of FRAM technology. Device specifications are guaranteed over an industrial temperature range of -40°C to +85°C.

Pin Configuration

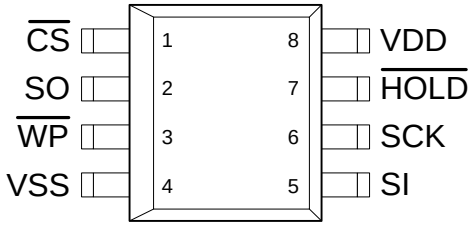

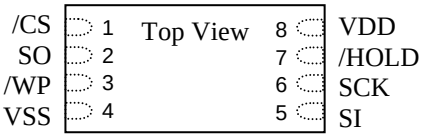

Pin Name	Function
/CS	Chip Select
/WP	Write Protect
/HOLD	Hold
SCK	Serial Clock
SI	Serial Data Input
SO	Serial Data Output
VDD	Supply Voltage
VSS	Ground

Ordering Information	
FM25L16-G	"Green" 8-pin SOIC
FM25L16-DG	"Green" 8-pin DFN

This is a product in the pre-production phase of development. Device characterization is complete and Ramtron does not expect to change the specifications. Ramtron will issue a Product Change Notice if any specification changes are made.
Rev. 2.0
Mar. 2005

Ramtron International Corporation
1850 Ramtron Drive, Colorado Springs, CO 80921
(800) 545-FRAM, (719) 481-7000
www.ramtron.com

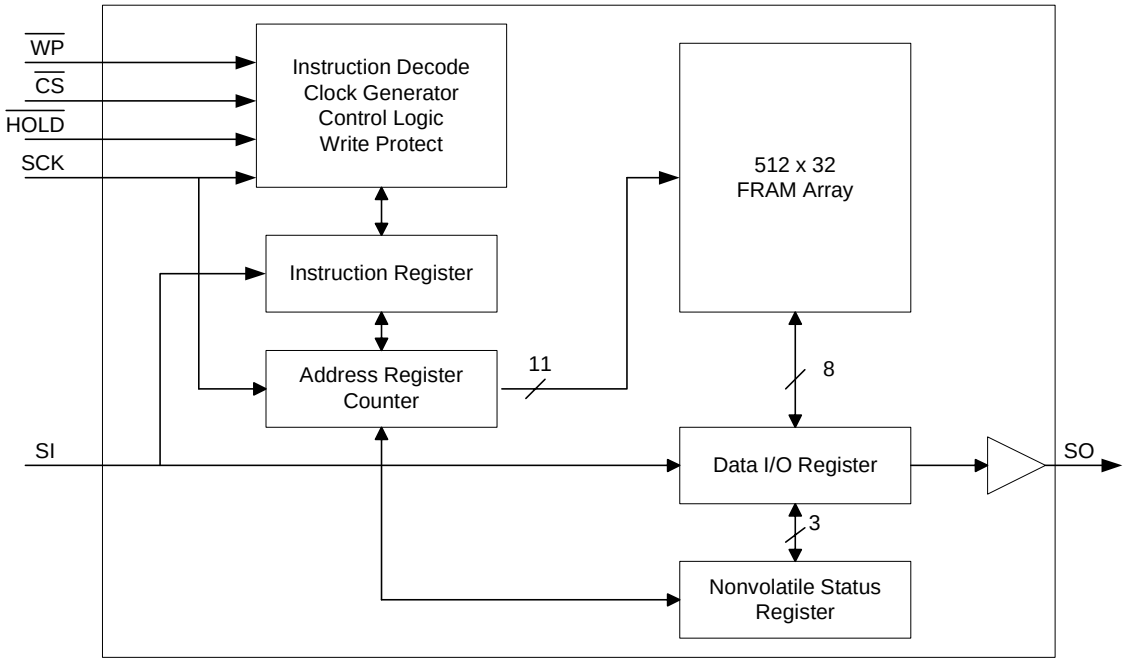

Figure 1. Block Diagram

Pin Descriptions

Pin Name	I/O	Description
/CS	Input	Chip Select: This active low input activates the device. When high, the device enters low-power standby mode, ignores other inputs, and all outputs are tri-stated. When low, the device internally activates the SCK signal. A falling edge on /CS must occur prior to every op-code.
SCK	Input	Serial Clock: All I/O activity is synchronized to the serial clock. Inputs are latched on the rising edge and outputs occur on the falling edge. Since the device is static, the clock frequency may be any value between 0 and 20 MHz and may be interrupted at any time.
/HOLD	Input	Hold: The /HOLD pin is used when the host CPU must interrupt a memory operation for another task. When /HOLD is low, the current operation is suspended. The device ignores any transition on SCK or /CS. All transitions on /HOLD must occur while SCK is low.
/WP	Input	Write Protect: This active low pin prevents write operations to the status register. This is critical since other write protection features are controlled through the status register. A complete explanation of write protection is provided on pages 6 and 7.
SI	Input	Serial Input: All data is input to the device on this pin. The pin is sampled on the rising edge of SCK and is ignored at other times. It should always be driven to a valid logic level to meet I_{DD} specifications. * SI may be connected to SO for a single pin data interface.
SO	Output	Serial Output: This is the data output pin. It is driven during a read and remains tri-stated at all other times including when /HOLD is low. Data transitions are driven on the falling edge of the serial clock. * SO may be connected to SI for a single pin data interface.
VDD	Supply	Power Supply (2.7V to 3.6V)
VSS	Supply	Ground

Overview

The FM25L16 is a serial FRAM memory. The memory array is logically organized as 2,048 x 8 and is accessed using an industry standard Serial Peripheral Interface or SPI bus. Functional operation of the FRAM is similar to serial EEPROMs. The major difference between the FM25L16 and a serial EEPROM with the same pinout is the FRAM's superior write performance.

Memory Architecture

When accessing the FM25L16, the user addresses 2,048 locations of 8 data bits each. These data bits are shifted serially. The addresses are accessed using the SPI protocol, which includes a chip select (to permit multiple devices on the bus), an op-code, and a two-byte address. The upper 5 bits of the address range are 'don't care' values. The complete address of 11-bits specifies each byte address uniquely.

Most functions of the FM25L16 either are controlled by the SPI interface or are handled automatically by on-board circuitry. The access time for memory operation is essentially zero, beyond the time needed for the serial protocol. That is, the memory is read or written at the speed of the SPI bus. Unlike an EEPROM, it is not necessary to poll the device for a ready condition since writes occur at bus speed. So, by the time a new bus transaction can be shifted into the device, a write operation will be complete. This is explained in more detail in the interface section.

Users expect several obvious system benefits from the FM25L16 due to its fast write cycle and high endurance as compared with EEPROM. In addition there are less obvious benefits as well. For example in a high noise environment, the fast-write operation is less susceptible to corruption than an EEPROM since it is completed quickly. By contrast, an EEPROM requiring milliseconds to write is vulnerable to noise during much of the cycle.

Note that the FM25L16 contains no power management circuits other than a simple internal power-on reset. It is the user's responsibility to ensure that V_{DD} is within datasheet tolerances to prevent incorrect operation. It is recommended that the part is not powered down with chip enable active.

Serial Peripheral Interface – SPI Bus

The FM25L16 employs a Serial Peripheral Interface (SPI) bus. It is specified to operate at speeds up to 20 MHz. This high-speed serial bus provides high performance serial communication to a host microcontroller. Many common microcontrollers have hardware SPI ports allowing a direct interface. It is quite simple to emulate the port using ordinary port pins for microcontrollers that do not. The FM25L16 operates in SPI Mode 0 and 3.

The SPI interface uses a total of four pins: clock, data-in, data-out, and chip select. A typical system configuration uses one or more FM25L16 devices with a microcontroller that has a dedicated SPI port, as Figure 2 illustrates. Note that the clock, data-in, and data-out pins are common among all devices. The Chip Select and Hold pins must be driven separately for each FM25L16 device.

For a microcontroller that has no dedicated SPI bus, a general purpose port may be used. To reduce hardware resources on the controller, it is possible to connect the two data pins (SI, SO) together and tie off (high) the Hold pin. Figure 3 shows a configuration that uses only three pins.

Protocol Overview

The SPI interface is a synchronous serial interface using clock and data pins. It is intended to support multiple devices on the bus. Each device is activated using a chip select. Once chip select is activated by the bus master, the FM25L16 will begin monitoring the clock and data lines. The relationship between the falling edge of /CS, the clock and data is dictated by the SPI mode. The device will make a determination of the SPI mode on the falling edge of each chip select. While there are four such modes, the FM25L16 supports Modes 0 and 3. Figure 4 shows the required signal relationships for Modes 0 and 3. For both modes, data is clocked into the FM25L16 on the rising edge of SCK and data is expected on the first rising edge after /CS goes active. If the clock begins from a high state, it will fall prior to beginning data transfer in order to create the first rising edge.

The SPI protocol is controlled by op-codes. These op-codes specify the commands to the device. After /CS is activated the first byte transferred from the bus master is the op-code. Following the op-code, any addresses and data are then transferred. Note that the WREN and WRDI op-codes are commands with no subsequent data transfer.

Important: The /CS must go inactive (high) after an operation is complete and before a new op-code can be issued. There is one valid op-code only per active chip select.

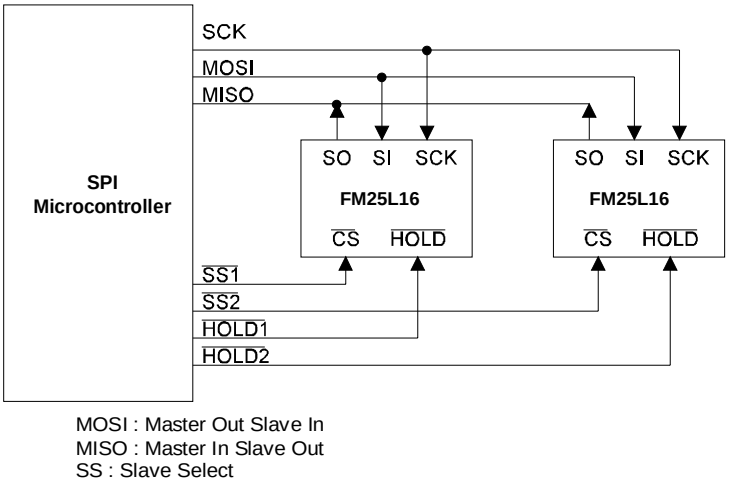

Figure 2. System Configuration with SPI port

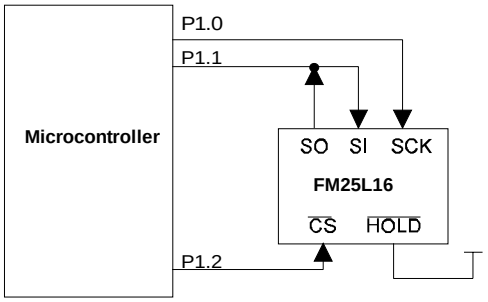

Figure 3. System Configuration without SPI port

SPI Mode 0: CPOL=0, CPHA=0

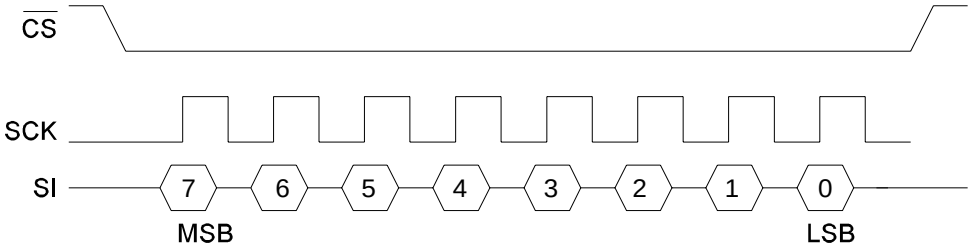

SPI Mode 3: CPOL=1, CPHA=1

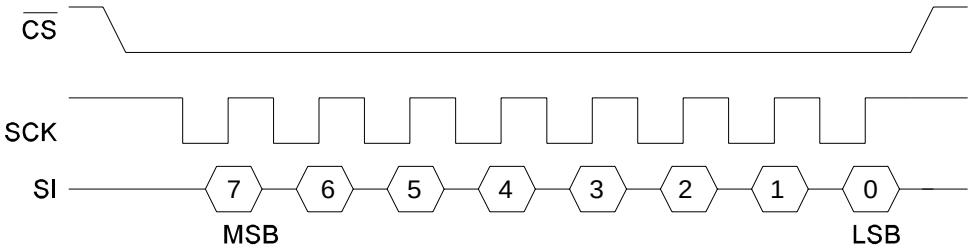

Figure 4. SPI Modes 0 & 3

Data Transfer

All data transfers to and from the FM25L16 occur in 8-bit groups. They are synchronized to the clock signal (SCK), and they transfer most significant bit (MSB) first. Serial inputs are registered on the rising edge of SCK. Outputs are driven from the falling edge of SCK.

Command Structure

There are six commands called op-codes that can be issued by the bus master to the FM25L16. They are listed in the table below. These op-codes control the functions performed by the memory. They can be divided into three categories. First, there are commands that have no subsequent operations. They perform a single function such as to enable a write operation. Second are commands followed by one byte, either in or out. They operate on the status register. The third group includes commands for memory transactions followed by an address and one or more bytes of data.

Table 1. Op-code Commands

Name	Description	Op-code
WREN	Set Write Enable Latch	0000 0110b
WRDI	Write Disable	0000 0100b
RDSR	Read Status Register	0000 0101b
WRSR	Write Status Register	0000 0001b
READ	Read Memory Data	0000 0011b
WRITE	Write Memory Data	0000 0010b

WREN - Set Write Enable Latch

The FM25L16 will power up with writes disabled. The WREN command must be issued prior to any write operation. Sending the WREN op-code will allow the user to issue subsequent op-codes for write operations. These include writing the status register and writing the memory.

Sending the WREN op-code causes the internal Write Enable Latch to be set. A flag bit in the status register, called WEL, indicates the state of the latch. WEL=1 indicates that writes are permitted. Attempting to write the WEL bit in the status register has no effect. Completing any write operation will automatically clear the write-enable latch and prevent further writes without another WREN command. Figure 5 below illustrates the WREN command bus configuration.

WRDI - Write Disable

The WRDI command disables all write activity by clearing the Write Enable Latch. The user can verify that writes are disabled by reading the WEL bit in the status register and verifying that WEL=0. Figure 6 illustrates the WRDI command bus configuration.

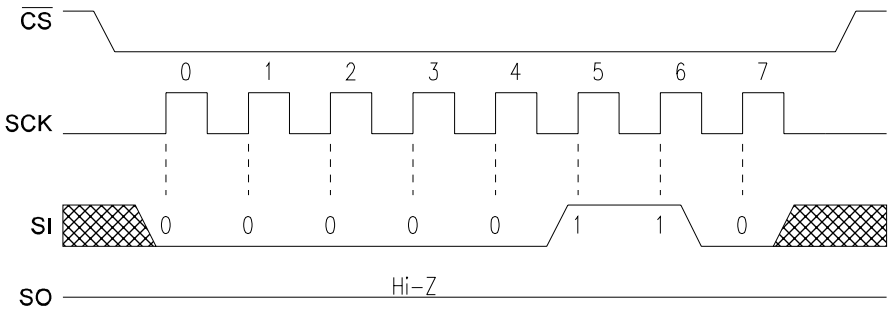

Figure 5. WREN Bus Configuration

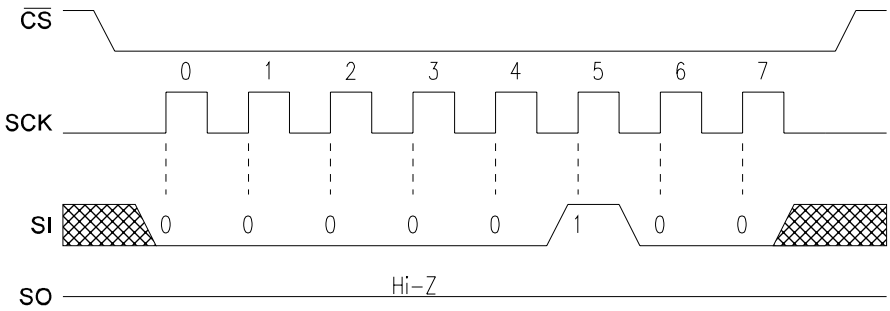

Figure 6. WRDI Bus Configuration

RDSR - Read Status Register

The RDSR command allows the bus master to verify the contents of the Status register. Reading Status provides information about the current state of the write protection features. Following the RDSR op-code, the FM25L16 will return one byte with the contents of the Status register. The Status register is described in detail in a later section.

WRSR – Write Status Register

The WRSR command allows the user to select certain write protection features by writing a byte to the Status register. Prior to issuing a WRSR command, the /WP pin must be high or inactive. Note that on the FM25L16, /WP only prevents writing to the Status register, not the memory array. Prior to sending the WRSR command, the user must send a WREN command to enable writes. Note that executing a WRSR command is a write operation and therefore clears the Write Enable Latch. The bus configuration of RDSR and WRSR are shown below.

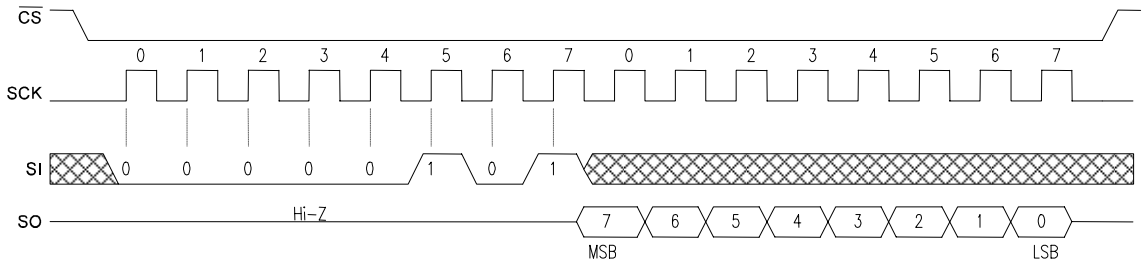

Figure 7. RDSR Bus Configuration

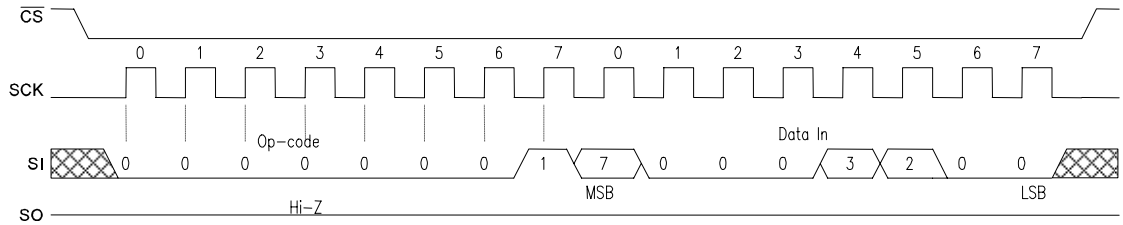

Figure 8. WRSR Bus Configuration

Status Register & Write Protection

The write protection features of the FM25L16 are multi-tiered. First, a WREN op-code must be issued prior to any write operation. Assuming that writes are enabled using WREN, writes to memory are controlled by the Status register. As described above, writes to the status register are performed using the WRSR command and subject to the /WP pin. The Status register is organized as follows.

Table 2. Status Register

Bit	7	6	5	4	3	2	1	0
Name	WPEN	0	0	0	BP1	BP0	WEL	0

Bits 0 and 4-6 are fixed at 0 and cannot be modified. Note that bit 0 (Ready in EEPROMs) is unnecessary as the FRAM writes in real-time and is never busy. The WPEN, BP1 and BP0 control write protection features. They are nonvolatile (shaded yellow). The WEL flag indicates the state of the Write Enable Latch. Attempting to directly write the WEL bit in the status register has no effect on its state. This bit is internally set and cleared via the WREN and WRDI commands, respectively.

BP1 and BP0 are memory block write protection bits. They specify portions of memory that are write protected as shown in the following table.

Table 3. Block Memory Write Protection

BP1	BP0	Protected Address Range
0	0	None
0	1	600h to 7FFh (upper ¼)
1	0	400h to 7FFh (upper ½)
1	1	000h to 7FFh (all)

The BP1 and BP0 bits and the Write Enable Latch are the only mechanisms that protect the memory from writes. The remaining write protection features protect inadvertent changes to the block protect bits.

The WPEN bit controls the effect of the hardware /WP pin. When WPEN is low, the /WP pin is ignored. When WPEN is high, the /WP pin controls write access to the status register. Thus the Status register is write protected if WPEN=1 and /WP=0.

This scheme provides a write protection mechanism, which can prevent software from writing the memory under any circumstances. This occurs if the BP1 and BP0 are set to 1, the WPEN bit is set to 1, and /WP is set to 0. This occurs because the block protect bits prevent writing memory and the /WP signal in hardware prevents altering the block protect bits (if WPEN is high). Therefore in this condition, hardware must be involved in allowing a write operation. The following table summarizes the write protection conditions.

Table 4. Write Protection

WEL	WPEN	/WP	Protected Blocks	Unprotected Blocks	Status Register
0	X	X	Protected	Protected	Protected
1	0	X	Protected	Unprotected	Unprotected
1	1	0	Protected	Unprotected	Protected
1	1	1	Protected	Unprotected	Unprotected

Memory Operation

The SPI interface, which is capable of a relatively high clock frequency, highlights the fast write capability of the FRAM technology. Unlike SPI-bus EEPROMs, the FM25L16 can perform sequential writes at bus speed. No page register is needed and any number of sequential writes may be performed.

Write Operation

All writes to the memory array begin with a WREN op-code. The next op-code is the WRITE instruction. This op-code is followed by a two-byte address value. The upper 5-bits of the address are ignored. In total, the 11-bits specify the address of the first data byte of the write operation. Subsequent bytes are data and they are written sequentially. Addresses are incremented internally as long as the bus master continues to issue clocks. If the last address of 7FFh is reached, the counter will roll over to 000h. Data is written MSB first. A write operation is shown in Figure 9.

Unlike EEPROMs, any number of bytes can be written sequentially and each byte is written to memory immediately after it is clocked in (after the 8th clock). The rising edge of /CS terminates a WRITE op-code operation.

Read Operation

After the falling edge of /CS, the bus master can issue a READ op-code. Following this instruction is a two-byte address value. The upper 5-bits of the address are ignored. In total, the 11-bits specify the address of the first byte of the read operation. After the op-code and address are complete, the SI line is ignored. The bus master issues 8 clocks, with one bit read out for each. Addresses are incremented internally as long as the bus master continues to issue clocks. If the last address of 7FFh is reached, the counter will roll over to 000h. Data is read MSB first. The rising edge of /CS terminates a READ op-code operation. A read operation is shown in Figure 10.

Hold

The /HOLD pin can be used to interrupt a serial operation without aborting it. If the bus master pulls the /HOLD pin low while SCK is low, the current operation will pause. Taking the /HOLD pin high while SCK is low will resume an operation. The transitions of /HOLD must occur while SCK is low, but the SCK pin can toggle during a hold state.

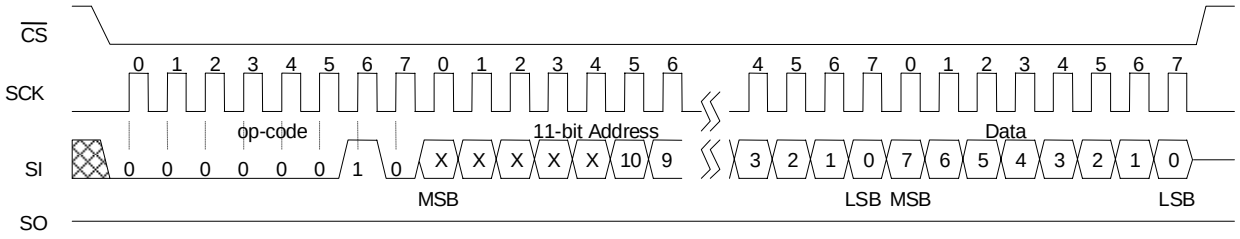

Figure 9. Memory Write

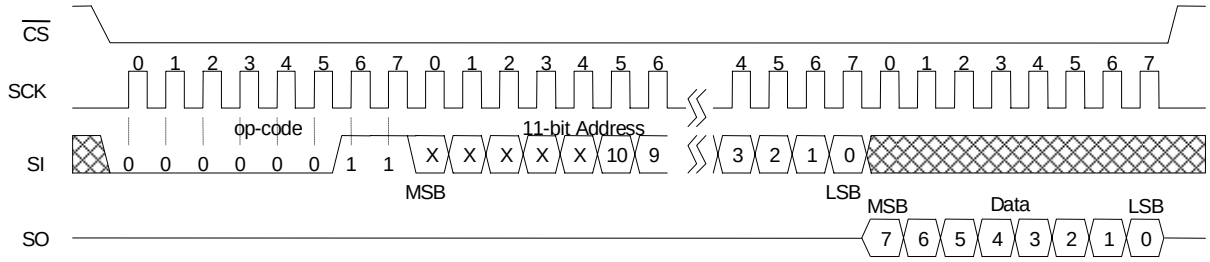

Figure 10. Memory Read

Electrical Specifications

Absolute Maximum Ratings

Symbol	Description	Ratings
V_{DD}	Power Supply Voltage with respect to V_{SS}	-1.0V to +5.0V
V_{IN}	Voltage on any pin with respect to V_{SS}	-1.0V to +5.0V and $V_{IN} < V_{DD}$+1.0V
T_{STG}	Storage Temperature	-55°C to + 125°C
T_{LEAD}	Lead Temperature (Soldering, 10 seconds)	300° C
V_{ESD}	Electrostatic Discharge Voltage - Human Body Model (JEDEC Std JESD22-A114-B) - Charged Device Model (JEDEC Std JESD22-C101-A)	 4kV 1kV
	Package Moisture Sensitivity Level	MSL-1

Stresses above those listed under Absolute Maximum Ratings may cause permanent damage to the device. This is a stress rating only, and the functional operation of the device at these or any other conditions above those listed in the operational section of this specification is not implied. Exposure to absolute maximum ratings conditions for extended periods may affect device reliability.

DC Operating Conditions (T_A = -40° C to + 85° C, V_{DD} = 2.7V to 3.6V unless otherwise specified)

Symbol	Parameter	Min	Typ	Max	Units	Notes
V_{DD}	Power Supply Voltage	2.7	3.3	3.6	V	
I_{DD}	VDD Supply Current @ SCK = 1.0 MHz @ SCK = 5.0 MHz @ SCK = 20.0 MHz		 0.2 1.4 5	 0.8 3.0 10.0	mA	1
I_{SB}	Standby Current	-		1	µA	2
I_{LI}	Input Leakage Current	-		±1	µA	3
I_{LO}	Output Leakage Current	-		±1	µA	3
V_{IH}	Input High Voltage	0.7 V_{DD}		V_{DD} + 0.5	V	
V_{IL}	Input Low Voltage	-0.3		0.3 V_{DD}	V	
V_{OH}	Output High Voltage @ I_{OH} = -2 mA	V_{DD} – 0.8		-	V	
V_{OL}	Output Low Voltage @ I_{OL} = 2 mA	-		0.4	V	
V_{HYS}	Input Hysteresis	0.05 V_{DD}		-	V	4

Notes

1. SCK toggling between V_{DD}-0.3V and V_{SS}, other inputs V_{SS} or V_{DD}-0.3V.
2. SCK = SI = /CS=V_{DD}. All inputs V_{SS} or V_{DD}.
3. $V_{SS} \le V_{IN} \le V_{DD}$ and $V_{SS} \le V_{OUT} \le V_{DD}$.
4. Characterized but not 100% tested in production.

AC Parameters (T_A = -40° C to + 85° C, C_L = 30pF)

Symbol	Parameter	V_{DD} 2.7 to 3.0V		V_{DD} 3.0 to 3.6V		Units	Notes
		Min	Max	Min	Max		
f_{CK}	SCK Clock Frequency	0	18	0	20	MHz	
t_{CH}	Clock High Time	25		22		ns	1
t_{CL}	Clock Low Time	25		22		ns	1
t_{CSU}	Chip Select Setup	10		10		ns	
t_{CSH}	Chip Select Hold	10		10		ns	
t_{OD}	Output Disable Time		20		20	ns	2
t_{ODV}	Output Data Valid Time		25		20	ns	
t_{OH}	Output Hold Time	0		0		ns	
t_D	Deselect Time	60		60		ns	
t_R	Data In Rise Time		50		50	ns	1,3
t_F	Data In Fall Time		50		50	ns	1,3
t_{SU}	Data Setup Time	5		5		ns	
t_H	Data Hold Time	5		5		ns	
t_{HS}	/Hold Setup Time	10		10		ns	
t_{HH}	/Hold Hold Time	10		10		ns	
t_{HZ}	/Hold Low to Hi-Z		20		20	ns	2
t_{LZ}	/Hold High to Data Active		20		20	ns	2

Notes
1. $t_{CH} + t_{CL} = 1/f_{CK}$.
2. Characterized but not 100% tested in production.
3. Rise and fall times measured between 10% and 90% of waveform.

Power Cycle Timing (T_A = -40° C to + 85° C, V_{DD} = 2.7V to 3.6V)

Symbol	Parameter	Min	Max	Units	Notes
t_{PU}	Power Up (V_{DD} min) to First Access (/CS low)	1	-	ms	
t_{PD}	Last Access (/CS high) to Power Down (V_{DD} min)	0	-	µs	
t_{VR}	V_{DD} Rise Time	50	-	µs/V	1,2
t_{VF}	V_{DD} Fall Time	100	-	µs/V	1,2

Capacitance (T_A = 25° C, f=1.0 MHz, V_{DD} = 3.3V)

Symbol	Parameter	Min	Max	Units	Notes
C_O	Output Capacitance (SO)	-	8	pF	1
C_I	Input Capacitance	-	6	pF	1

Notes
1. This parameter is periodically sampled and not 100% tested.
2. Slope measured at any point on V_{DD} waveform.

AC Test Conditions

Input Pulse Levels	10% and 90% of V_{DD}
Input rise and fall times	5 ns
Input and output timing levels	0.5 V_{DD}
Output Load Capacitance	30 pF

Serial Data Bus Timing

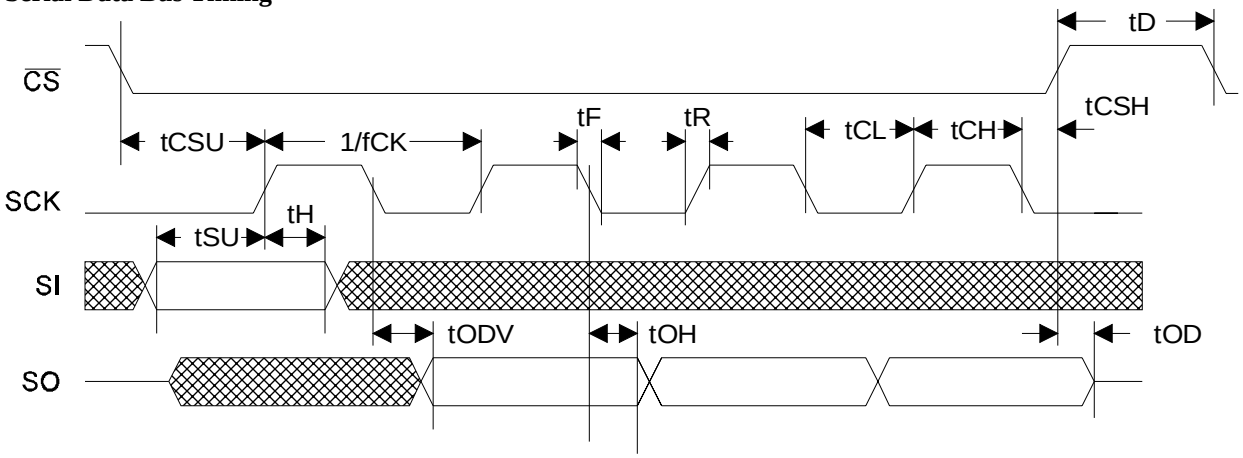

/Hold Timing

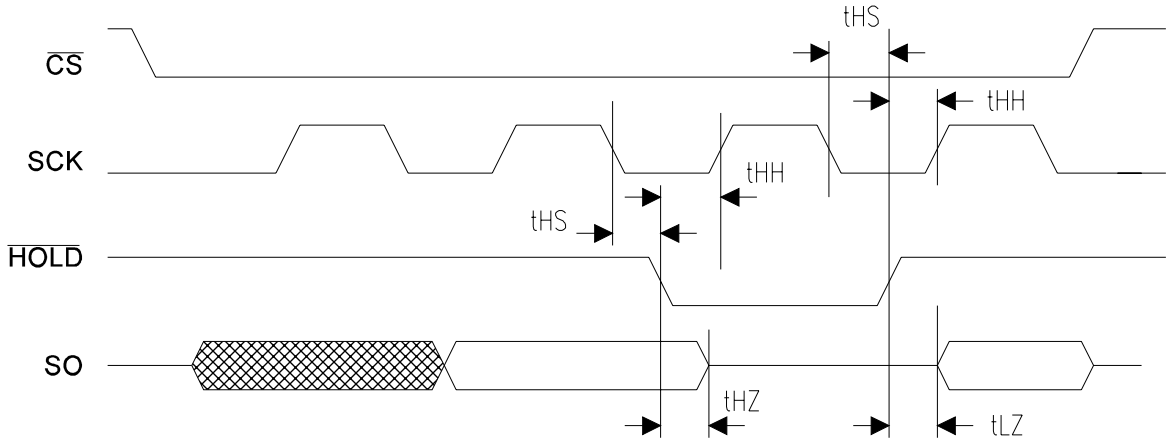

Power Cycle Timing

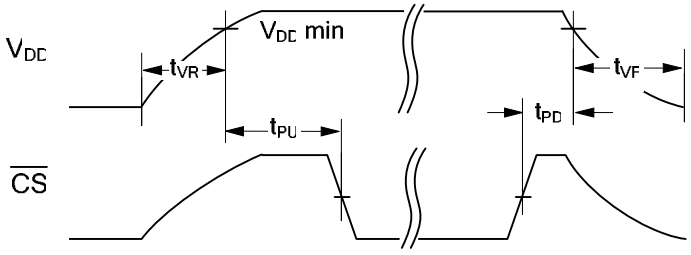

Data Retention (V_{DD} = 2.7V to 3.6V, + 85° C)

Parameter	Min	Max	Units	Notes
Data Retention	45	-	Years	

Mechanical Drawing

8-pin SOIC (JEDEC Standard MS-012, variation AA)

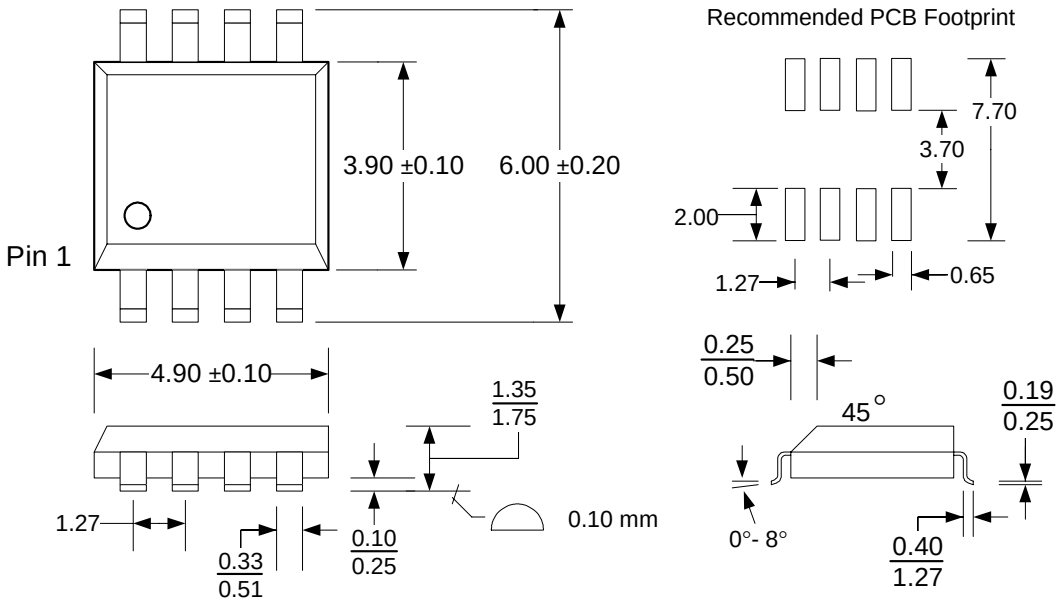

Refer to JEDEC MS-012 for complete dimensions and notes.
All dimensions in millimeters.

SOIC Package Marking Scheme

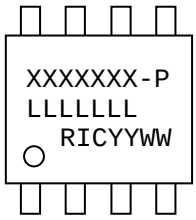

Legend:
XXXX= part number, P= package type
LLLLLLL= lot code
RIC=Ramtron Int'l Corp, YY=year, WW=work week

Example: FM25L16, "Green" SOIC package, Year 2004, Work Week 38
FM25L16-G
A40003G
RIC0438

8-pin DFN (3.0mm x 6.4mm body, 0.65mm pitch)

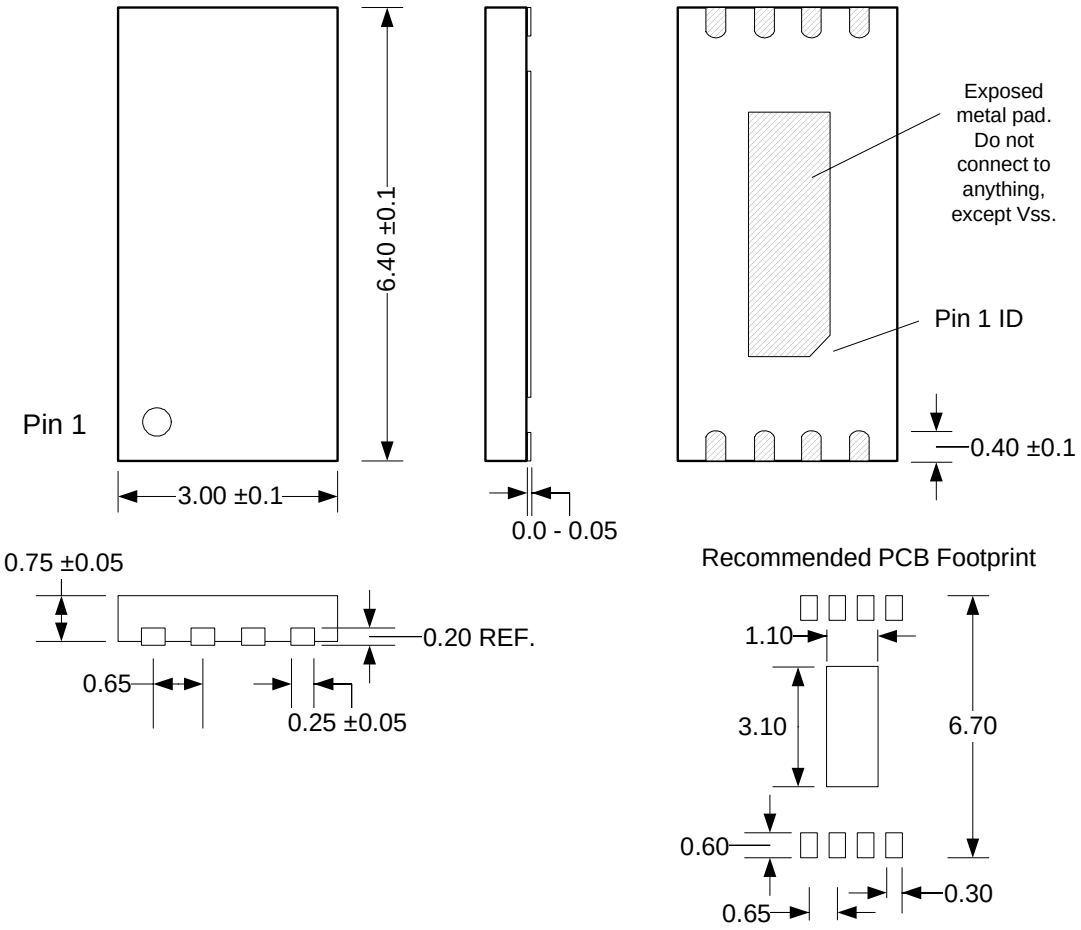

Note: All dimensions in millimeters. This package is footprint compatible with the 8-pin TSSOP.

DFN Package Marking Scheme for Body Size 3mm x 6.4mm



Legend:
RIC=Ramtron Int'l Corp, G="green" DFN package
XXXX=base part number
LLLL= lot code
YY=year, WW=work week

Example: "Green" DFN package, FM25L16, Lot 0003, Year 2004, Work Week 38
RICG
5L16
0003
0438

Revision History

Revision	Date	Summary
0.1	3/16/04	Initial Release
0.2	6/2/04	Replaced TSSOP with DFN package.
1.0	10/22/04	Changed to Preliminary status. Added clarification to DFN package drawing. Changed AC timing reference to 0.5 V_{DD}. Added Power Cycling parameters and diagram.
2.0	3/10/05	Changed to Pre-Production status. Added ESD and package MSL ratings. Changed Data Retention spec.