FAIRCHILD SEMICONDUCTOR®

February 2012

FL7730MY
Single-Stage Primary-Side-Regulation PWM Controller for PFC and LED Dimmable Driving

Features

- Compatible with Traditional TRIAC Control (No need to change existing lamp infrastructure: wall switch & wire)
- Compatible with Non-Dimming Lamp Designs
- Cost-Effective Solution without Input Bulk Capacitor and Feedback Circuitry
- Power Factor Correction (PFC)
- Accurate Constant-Current (CC) Control, Independent Online Voltage, Output Voltage, Magnetizing Inductance Variation
- Line Voltage Compensation for CC Control
- Linear Frequency Control for Better Efficiency and Simple Design
- Open-LED Protection
- Short-LED Protection
- Cycle-by-Cycle Current Limiting
- Over-Temperature Protection with Auto Restart
- Low Startup Current: 20μA
- Low Operating Current: 5mA
- Frequency Hopping for Better EMI Performance
- SOP-8 Package Available
- Application Voltage Range: $80V_{AC}$ ~ $308V_{AC}$

Description

This highly integrated PWM controller, FL7730MY, provides several features to enhance the performance of single-stage flyback converters. The proprietary topology, TRUECURRENT™, enables the simplified circuit design for LED lighting applications.

TRIAC dimming is smoothly managed by dimming brightness control without flicker. By using single-stage topology with primary-side regulation, an LED lighting board can be implemented with few external components and minimized cost. It does not require an input bulk capacitor or feedback circuitry. To implement good power factor and low total harmonic distortion, constant on-time control is utilized with an external capacitor connected to the COMI pin.

Precise constant-current control regulates accurate output current versus changes in input voltage and output voltage. The operating frequency is proportionally changed by the output voltage to guarantee Discontinuous Conduction Mode (DCM) operation with higher efficiency and simpler design. The FL7730MY provides protections such as open-LED, short-LED, and over-temperature protections. Current-limit level is automatically reduced to minimize output current and protect external components in a short-LED condition.

The FL7730MY frequency-hopping function in the oscillator improves EMI performance. The FL7730MY controller is available in an 8-pin SOP package.

Applications

- LED Lighting System

Ordering Information

Part Number	Operating Temperature Range	Package	Packing Method
FL7730MY	-40°C to +125°C	8-Lead, Small Outline Package (SOP-8)	Tape & Reel

© 2011 Fairchild Semiconductor Corporation

Application Diagram

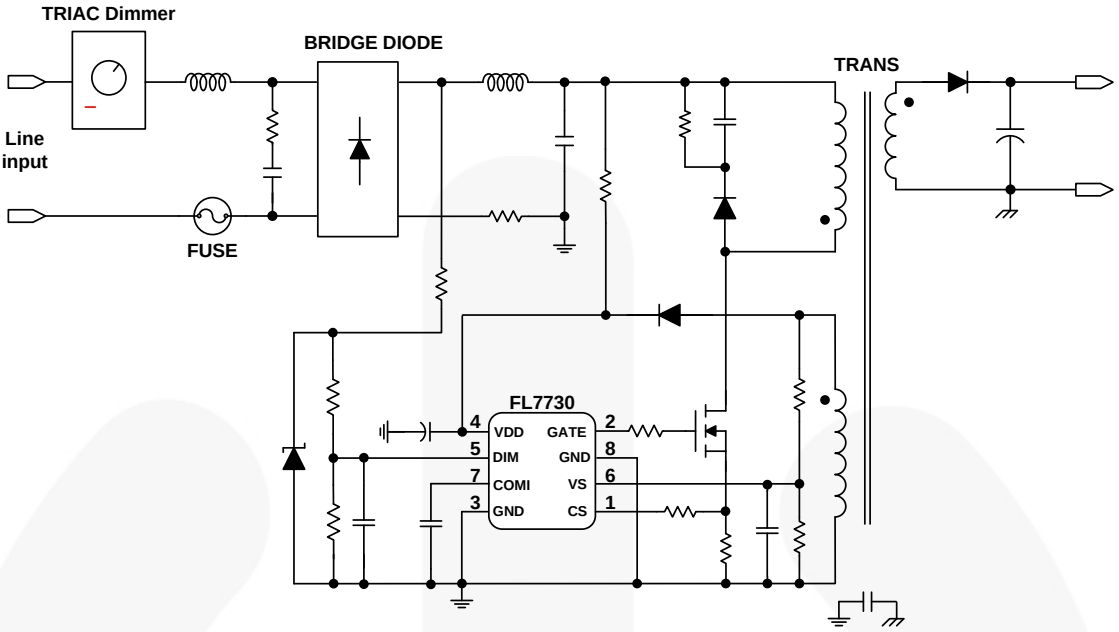

Figure 1. Typical Application

Internal Block Diagram

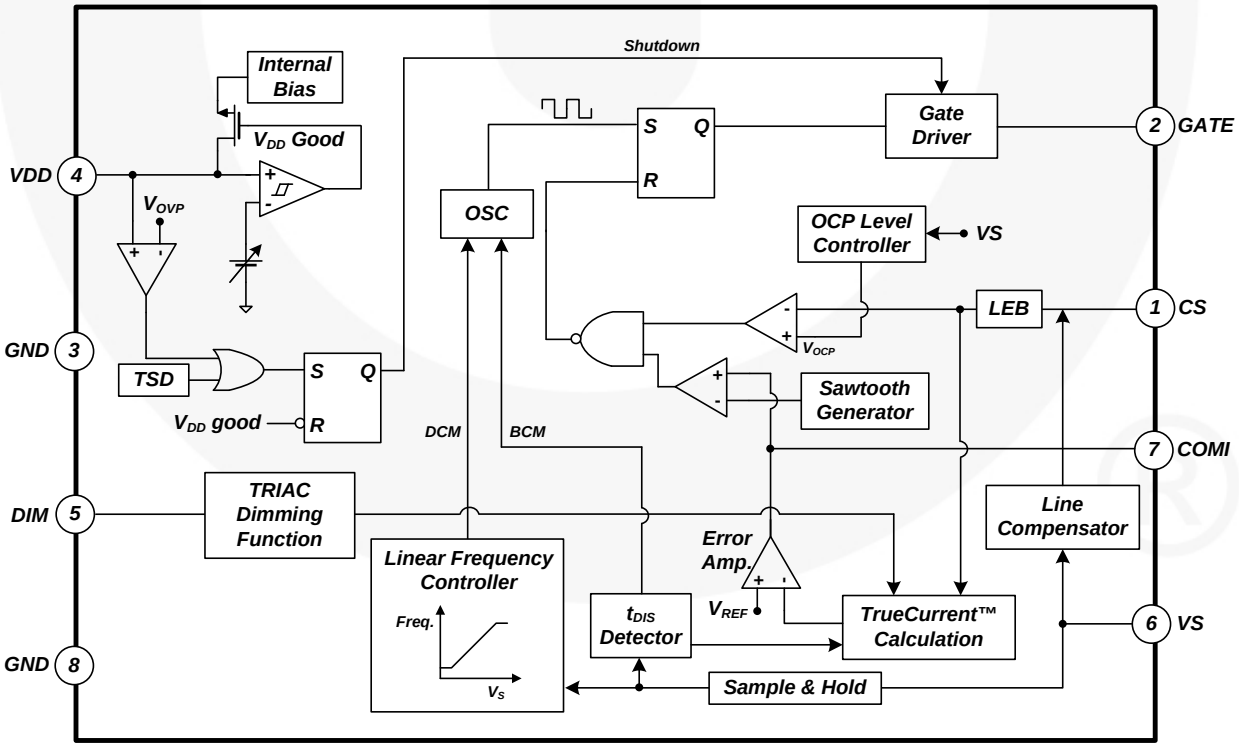

Figure 2. Functional Block Diagram

Marking Information

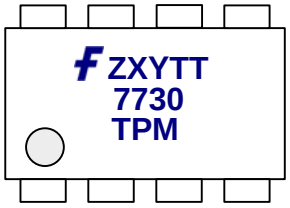

F: Fairchild Logo
Z: Plant Code
X: 1-Digit Year Code
Y: 1-Digit Week Code
TT: 2-Digit Die Run Code
T: Package Type (M=SOP)
P: Z: Pb free, Y: Green package
M: Manufacture Flow Code

Figure 3. Top Mark

Pin Configuration

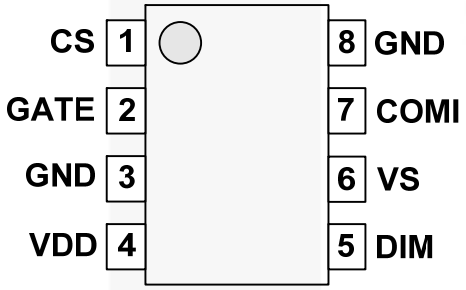

Figure 4. Pin Configuration

Pin Definitions

Pin #	Name	Description
1	CS	**Current Sense**. This pin connects a current-sense resistor to detect the MOSFET current for the output-current regulation in constant current regulation.
2	GATE	**PWM Signal Output**. This pin uses the internal totem-pole output driver to drive the power MOSFET.
3	GND	**Ground**
4	VDD	**Power Supply**. IC operating current and MOSFET driving current are supplied using this pin.
5	DIM	**Dimming**. This pin controls the dimming operation of LED lighting.
6	VS	**Voltage Sense**. This pin detects the output voltage information and discharge time for linear frequency control and constant-current regulation. This pin connects divider resistors from the auxiliary winding.
7	COMI	**Constant Current Loop Compensation**. This pin is the output of the transconductance error amplifier.
8	GND	**Ground**

© 2011 Fairchild Semiconductor Corporation

Absolute Maximum Ratings

Stresses exceeding the absolute maximum ratings may damage the device. The device may not function or be operable above the recommended operating conditions and stressing the parts to these levels is not recommended. In addition, extended exposure to stresses above the recommended operating conditions may affect device reliability. The absolute maximum ratings are stress ratings only.

Symbol	Parameter		Min.	Max.	Unit
V_{VDD}	DC Supply Voltage[1,22]			30	V
V_{VS}	VS Pin Input Voltage		-0.3	7.0	V
V_{CS}	CS Pin Input Voltage		-0.3	7.0	V
V_{DIM}	DIM Pin Input Voltage		-0.3	7.0	V
V_{COMI}	COMI Pin Input Voltage		-0.3	7.0	V
V_{GATE}	GATE Pin Input Voltage		-0.3	30.0	V
P_D	Power Dissipation ($T_A < 50°C$)			633	mW
θ_{JA}	Thermal Resistance (Junction to Air)			158	°C /W
θ_{JC}	Thermal Resistance (Junction to Case)			39	°C /W
T_J	Maximum Junction Temperature			150	°C
T_{STG}	Storage Temperature Range		-55	150	°C
T_L	Lead Temperature (Soldering, 10 Seconds)			260	°C
ESD	Electrostatic Discharge Capability	Human Body Model, JESD22-A114		6	KV
		Charged Device Model, JESD22-C101		2	

Notes:
1. Stresses beyond those listed under Absolute Maximum Ratings may cause permanent damage to the device.
2. All voltage values, except differential voltages, are given with respect to the GND pin.

Recommended Operating Conditions

The Recommended Operating Conditions table defines the conditions for actual device operation. Recommended operating conditions are specified to ensure optimal performance to the datasheet specifications. Fairchild does not recommend exceeding them or designing to Absolute Maximum Ratings.

Symbol	Parameter	Min.	Max.	Unit
T_A	Operating Ambient Temperature	-40	125	°C

© 2011 Fairchild Semiconductor Corporation

Electrical Characteristics

V_{DD}=20V and T_A=25°C unless otherwise specified.

Symbol	Parameter	Conditions	Min.	Typ.	Max.	Units
VDD Section						
V_{DD-ON}	Turn-On Threshold Voltage		14.5	16.0	17.5	V
V_{DD-OFF}	Turn-Off Threshold Voltage		6.75	7.75	8.75	V
I_{DD-OP}	Operating Current	Maximum Frequency, C_{LOAD} = 1nF	3	4	5	mA
I_{DD-ST}	Startup Current	V_{DD} = V_{DD-ON} – 0.16V		2	20	µA
V_{OVP}	V_{DD} Over-Voltage-Protection		22.0	23.5	25.0	V
Gate Section						
V_{OL}	Output Voltage Low	V_{DD}=20V,I_{GATE}=-1mA			1.5	V
V_{OH}	Output Voltage High	V_{DD}=10V,I_{GATE}=+1mA	5			V
I_{source}	Peak Sourcing Current	V_{DD} = 10 ~ 20V		60		mA
I_{sink}	Peak Sinking Current	V_{DD} = 10 ~ 20V		180		mA
t_r	Rising Time	C_{LOAD} = 1nF	100	150	200	ns
t_f	Falling Time	C_{LOAD} = 1nF	20	60	100	ns
V_{CLAMP}	Output Clamp Voltage		12	15	18	V
Oscillator Section						
f_{MAX-CC}	Maximum Frequency in CC		60	65	70	kHz
f_{MIN-CC}	Minimum Frequency in CC		21.0	23.5	26.0	kHz
VS_{MAX-CC}	V_S for Maximum Frequency in CC	f = f_{MAX} -2kHz	2.25	2.35	2.45	V
VS_{MIN-CC}	V_S for Minimum Frequency in CC	f = f_{MIN} +2kHz	0.55	0.85	1.15	V
$f_{HOPPING}$	Frequency Hopping Range		±1.8	±2.9	±4.0	kHz
$f_{HOPPING}$	Frequency Hopping Period			2		ms
$t_{ON(MAX)}$	Maximum Turn-On Time		12	14	16	µs
Current Sense Section						
V_{RV}	Reference Voltage		2.475	2.500	2.525	V
V_{CCR}	EAI Voltage for Constant Current Regulation	V_{CS} = 0.44V	2.38	2.43	2.48	V
t_{LEB}	Leading-Edge Blanking Time			300		ns
t_{MIN}	Minimum On Time in CC	V_{COMI} = 0V		600		ns
t_{PD}	Propagation Delay to GATE		50	100	150	ns
$t_{tdis-BNK}$	t_{DIS} Blanking Time of VS			1.5		µs
$I_{COMI-BNK}$	VS Current for COMI Blanking			100		µA
Current-Error Amplifier Section						
Gm	Transconductance			85		µmho
$I_{COMI-SINK}$	COMI Sink Current	V_{EAI}=3V, V_{COMI}=5V	28		38	µA
$I_{COMI-SOURCE}$	COMI Source Current	V_{EAI}=2V, V_{COMI}=0V	28		38	µA
$V_{COMI-HGH}$	COMI High Voltage	V_{EAI}=2V	4.9			V
$V_{COMI-LOW}$	COMI Low Voltage	V_{EAI}=3V			0.1	V

Continued on the following page…

© 2011 Fairchild Semiconductor Corporation

Electrical Characteristics

V_{DD}=15V and T_A=25°C unless otherwise specified.

Symbol	Parameter	Conditions	Min.	Typ.	Max.	Units
Over-Current Protection Section						
V_{OCP}	V_{CS} Threshold Voltage for OCP		0.60	0.67	0.74	V
V_{LowOCP}	V_{CS} Threshold Voltage for Low OCP		0.13	0.18	0.23	V
$t_{startup}$	Startup Time			13		ms
$V_{LowOCP-EN}$	VS Threshold Voltage to Enable Low OCP level			0.40		V
$V_{LowOCP-DIS}$	VS Threshold Voltage to Disable Low OCP level			0.60		V
Over-Temperature Protection Section						
T_{OTP}	Threshold Temperature for OTP(3)		140	150	160	°C
$T_{OTP-HYS}$	Restart Junction Temperature Hysteresis			10		°C
Dimming Section						
$V_{DIM-LOW}$	Maximum V_{DIM} at Low Dimming Angle Range		2.45	2.50	2.55	V
$V_{DIM-HIGH}$	Maximum V_{DIM} at High Dimming Angle Range		3.43	3.50	3.57	V
DS_{LOW}	V_{DIM} vs. $V_{cs,offset}$ Slope at Low Dimming Angle Range			0.19		V/V
DS_{HIGH}	V_{DIM} vs. $V_{cs,offset}$ Slope at High Dimming Angle Range			0.58		V/V

Note:

3. If over-temperature protection is activated, the power system enters Auto Recovery Mode and output is disabled. Device operation above the maximum junction temperature is NOT guaranteed.

© 2011 Fairchild Semiconductor Corporation

Typical Performance Characteristics

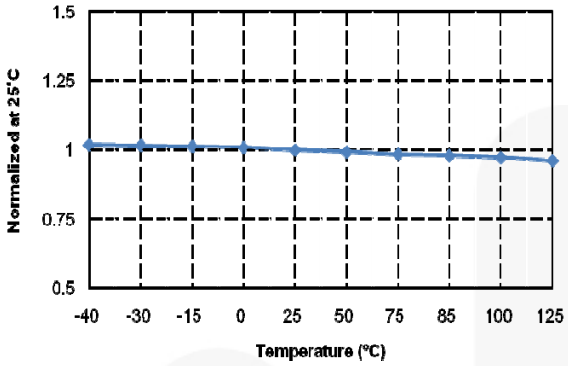

Figure 5. V_{DD-ON} vs. Temperature

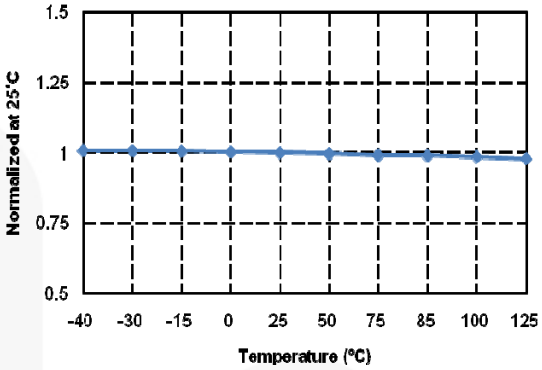

Figure 6. V_{DD-OFF} vs. Temperature

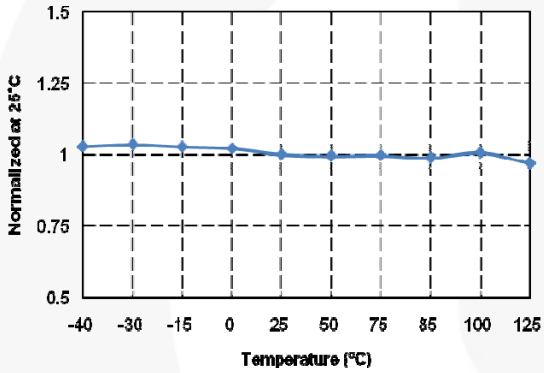

Figure 7. I_{DD-OP} vs. Temperature

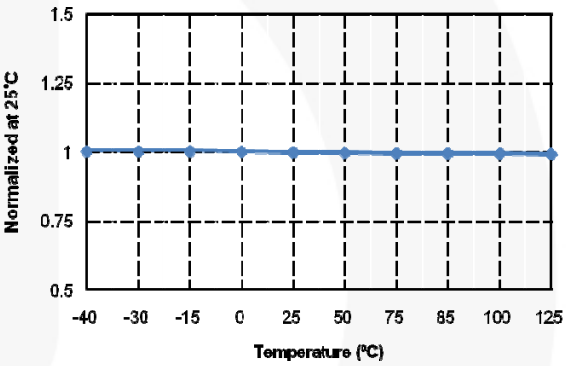

Figure 8. V_{OVP} vs. Temperature

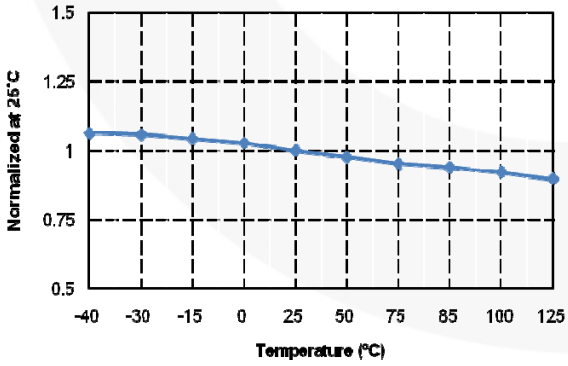

Figure 9. f_{MAX-CC} vs. Temperature

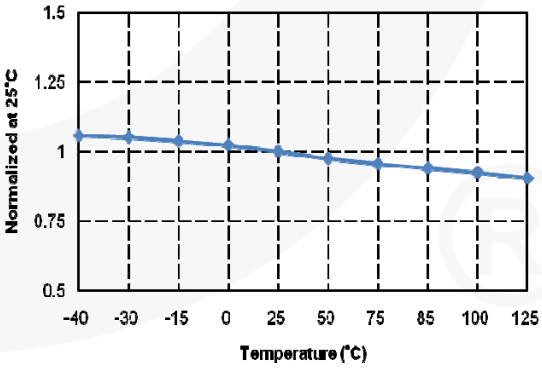

Figure 10. f_{MIN-CC} vs. Temperature

© 2011 Fairchild Semiconductor Corporation

Typical Performance Characteristics

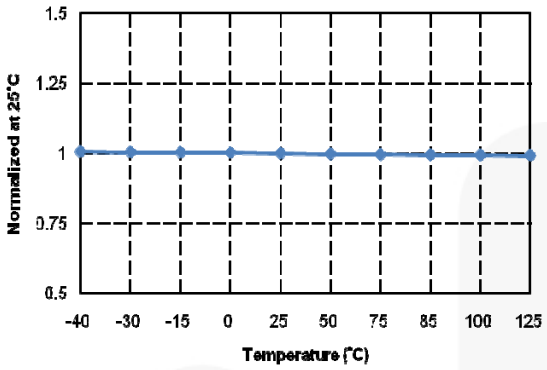

Figure 11. V_{RV} vs. Temperature

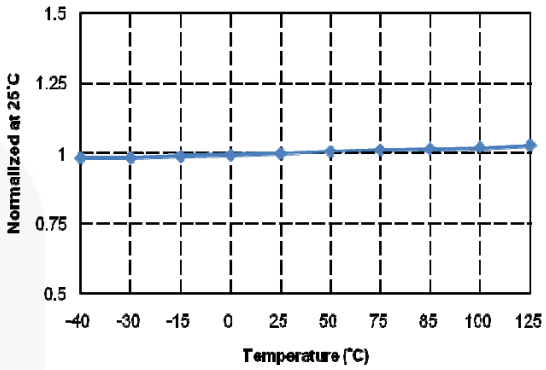

Figure 12. V_{CCR} vs. Temperature

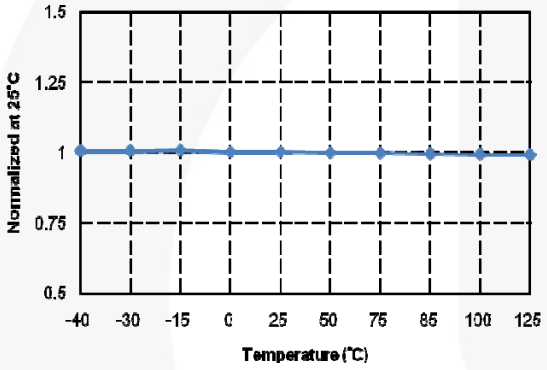

Figure 13. V_{OCP} vs. Temperature

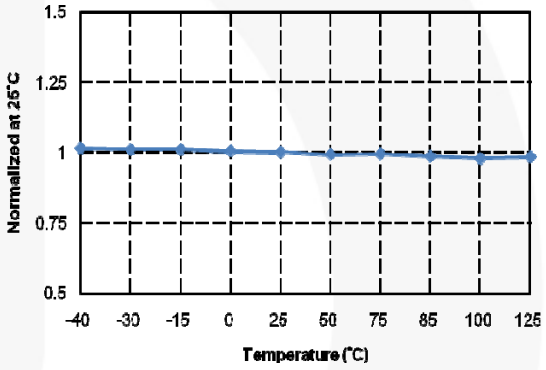

Figure 14. V_{LowOCP} vs. Temperature

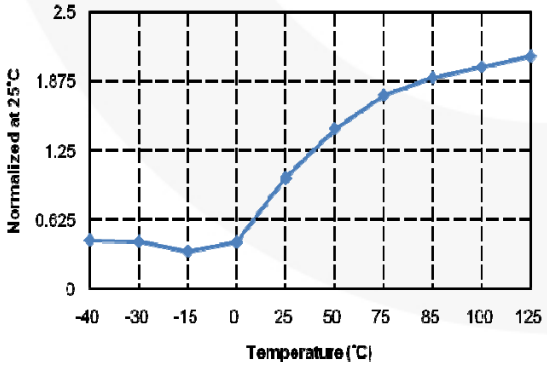

Figure 15. DS_{LOW} vs. Temperature

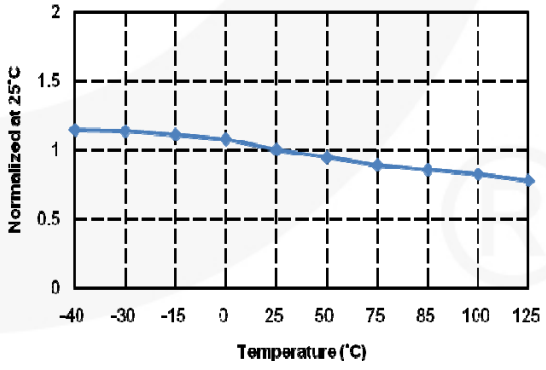

Figure 16. DS_{HIGH} vs. Temperature

Functional Description

FL7730 is AC-DC dimmable PWM controller for LED lighting applications. TRUECURRENT™ technique and internal line compensation regulates accurate LED current independent of input voltage, output voltage, and magnetizing inductance variations. The TRIAC dim function block provides smooth brightness dimming control compatible with a conventional TRIAC dimmer. The linear frequency control in the oscillator reduces conduction loss and maintains DCM operation in a wide range of output voltages, which implements high power factor correction in a single-stage flyback topology. A variety of protections; such as short-LED protection, open-LED protection, over-temperature protection, and cycle-by-cycle current limitation; stabilize system operation and protect external components.

Startup

Powering at startup is slow due to the low feedback loop bandwidth in the PFC converter. To boost power during startup, an internal oscillator counts 12ms to define Startup Mode. During Startup Mode, turn-on time is determined by Current Mode control with a 0.2V CS voltage limit and transconductance becomes 14 times larger, as shown in Figure 17. After Startup Mode, turn-on time is controlled by Voltage Mode using the COMI voltage and the error amplifier transconductance is reduced to 85Mho.

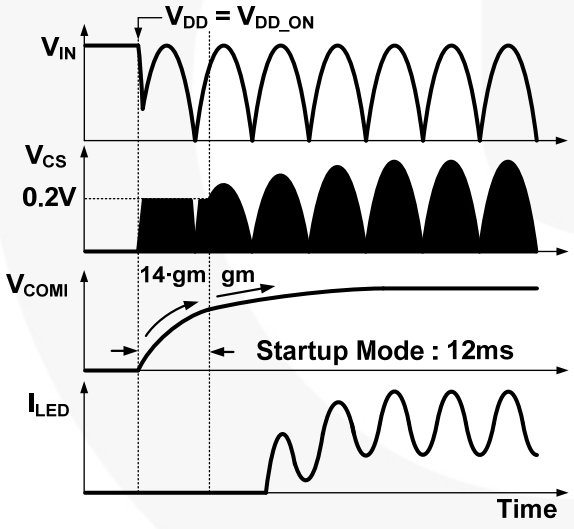

Figure 17. Startup Sequence

Constant-Current Regulation

The output current is estimated using the peak drain current and inductor current discharge time because output current is same as the average of the diode current in steady state. The peak value of the drain current is determined by the CS pin. The inductor discharge time (t_{DIS}) is sensed by a t_{DIS} detector. Using three sources of information (peak drain current, inductor discharging time, and operating switching period), a TRUECURRENT™ block calculates estimated output current. The output of the calculation is compared with an internal precise reference to generate an error voltage (V_{COMI}), which determines turn-on time in Voltage Mode control. With Fairchild's innovative TRUECURRENT™ technique, constant current output can be precisely controlled.

PFC and THD

In a conventional boost converter, Boundary Conduction Mode (BCM) is generally used to keep input current in phase with input voltage for power factor (PF) and Total Harmonic Distortion (THD). However, in flyback / buck boost topology, constant turn-on time and constant frequency in Discontinuous Conduction Mode (DCM) can implement high PF and low THD, as shown in Figure 18. Constant turn-on time is maintained by an internal error amplifier and a large external capacitor (typically >1μF) at the COMI pin. Constant frequency and DCM operation are managed by linear frequency control.

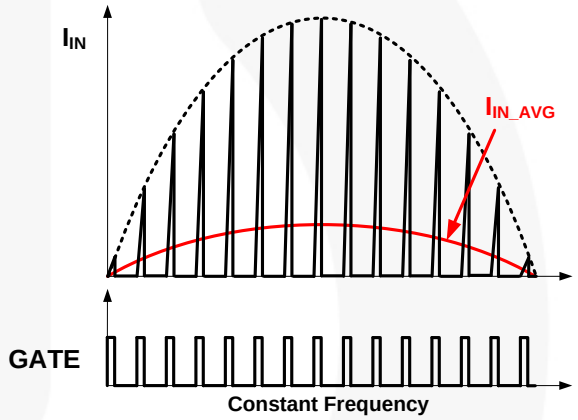

Figure 18. Input Current and Switching

Linear Frequency Control

DCM should be guaranteed for high power factor in flyback topology. To maintain DCM in the wide range of output voltage, frequency is linearly adjusted by output voltage in linear frequency control. Output voltage is detected by auxiliary winding and resistive divider connected to the VS pin, as shown in Figure 19.

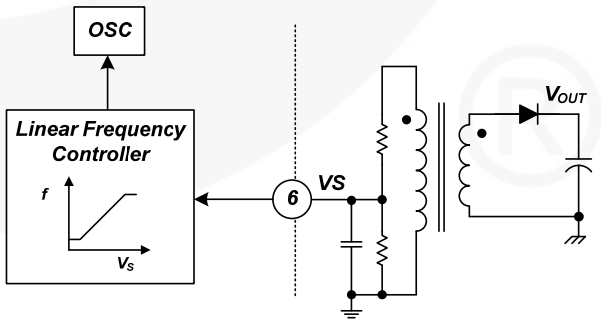

Figure 19. Linear Frequency Control

© 2011 Fairchild Semiconductor Corporation

When output voltage decreases, secondary diode conduction time is increased and the linear frequency control lengthens switching period, which retains DCM operation in the wide output voltage range, as shown in Figure 20. The frequency control lowers primary rms current for better power efficiency in full-load condition.

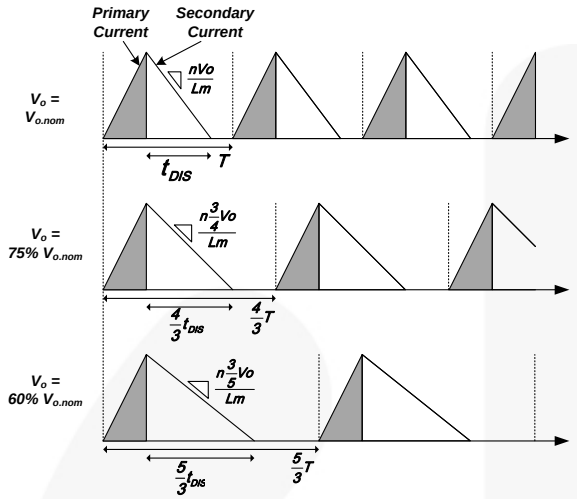

Figure 20. Primary and Secondary Current

BCM Control

The end of secondary diode conduction time can be over a switching period set by linear frequency control. In this case, FL7730 doesn't allow CCM and operation mode changes from DCM to BCM. Therefore, FL7730 originally eliminates sub-harmonic distortion in CCM.

Dimming Control

TRIAC dimmable control is implemented by simple and noise-immune external passive components and an internal dimming function block. Figure 21 shows dimming angle detection and the internal dimming control block. Dimming angle is sensed by Zener diode and Zener diode voltage is divided by two resistors (R_{D1} and R_{D2}) to fit the sensing range of the DIM pin. The detected signal is filtered by capacitor C_D to provide DC voltage into the DIM pin. The internal dimming control adds CS_{offset} to the peak current value as the input of TRUECURRENT™ calculation block. When the dimming angle is small, lowered DIM voltage increases CS_{offset}, which makes calculated output current larger and reduces turn-on time to dim the LED brightness.

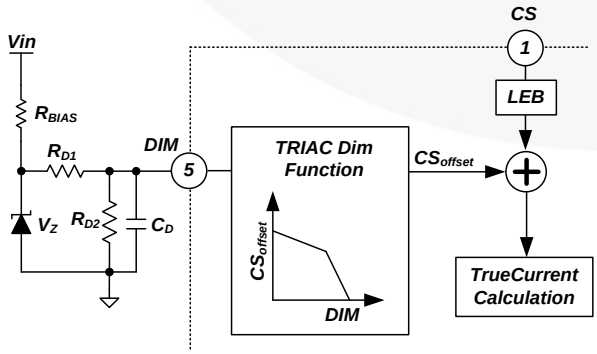

Figure 21. Dimming Control Schematic

To disable the dimming function, a 1nF filter capacitor can be added at the DIM pin. An internal current source (~7.5μA) on the DIM pin charges the filter capacitor up to 4V. FL7730 goes into IC Test Mode when DIM voltage is over 6V; so the maximum DIM voltage should be limited to less than 5V.

Short-LED Protection

In a short-LED condition, the switching MOSFET and secondary diode are usually stressed by the high powering current. However, FL7730 changes the OCP level in a short-LED condition. When V_S is lower than 0.4V, the OCP level becomes down to 0.2V from 0.7V, as shown in Figure 22, so that powering is limited and external components' current stress is relieved.

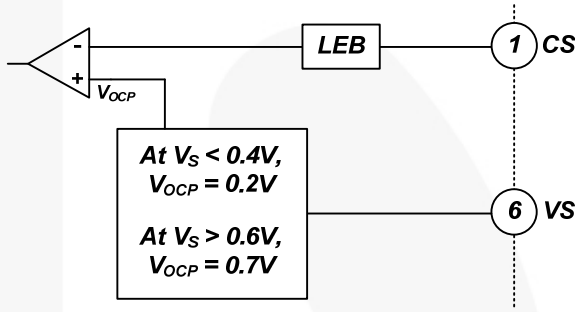

Figure 22. Internal OCP Block

Figure 23 shows operational waveforms in short-LED condition. Output voltage is quickly lowered to 0V after the LED-short event. The reflected auxiliary voltage is also 0V, making V_S less than 0.4V. The 0.2V OCP level limits primary-side current and V_{DD} hiccups up and down in between UVLO hysteresis.

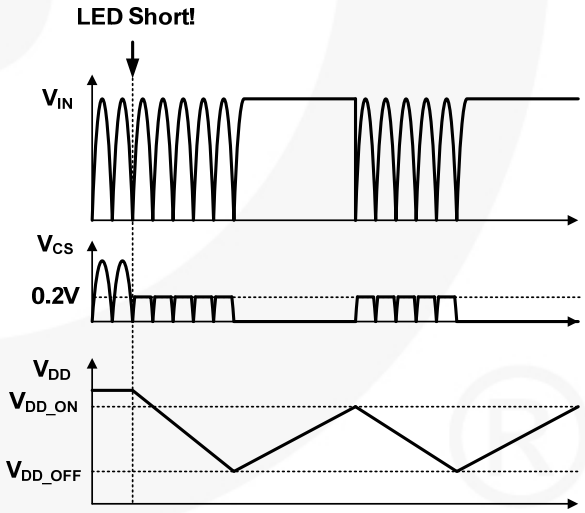

Figure 23. Waveforms in Short-LED Condition

Open-LED Protection

FL7730 protects external components, such as diodes and capacitors on the secondary side, in the open-LED condition. During switch-off, the V_{DD} capacitor is charged up to the auxiliary winding voltage, which is applied as the reflected output voltage. Because the V_{DD} voltage has output voltage information, the internal voltage comparator on the VDD pin can trigger output Over-Voltage Protection (OVP), as shown in Figure 24. When at least one LED is open-circuited, output load impedance becomes very high and output capacitor is quickly charged up to V_{OVP} x Ns / Na. Then switching is shut down and V_{DD} block goes into "Hiccup" Mode until the open-LED condition is removed, shown in Figure 25.

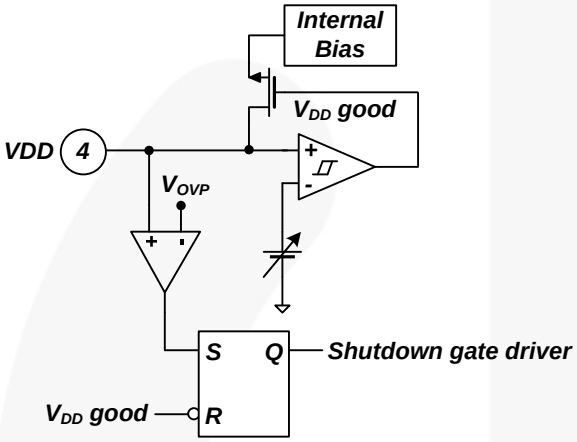

Figure 24. Internal OVP Block

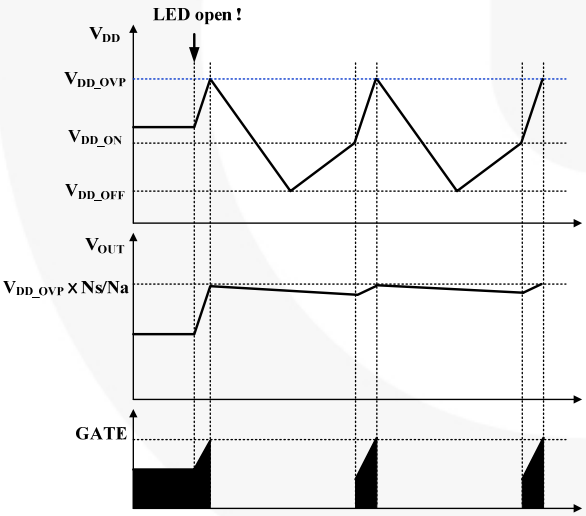

Figure 25. Waveforms in Open-LED Condition

Under-Voltage Lockout (UVLO)

The turn-on and turn-off thresholds are fixed internally at 16V and 7.5V, respectively. During startup, the V_{DD} capacitor must be charged to 16V through the startup resistor to enable the FL7730. The V_{DD} capacitor continues to supply V_{DD} until power can be delivered from the auxiliary winding of the main transformer. V_{DD} must not drop below 7.5V during this startup process. This UVLO hysteresis window ensures that the V_{DD} capacitor is adequate to supply V_{DD} during startup.

Over-Temperature Protection (OTP)

The built-in temperature-sensing circuit shuts down PWM output if the junction temperature exceeds 150°C. While PWM output is shut down, the V_{DD} voltage gradually drops to the UVLO voltage. Some of the internal circuits are shut down and V_{DD} gradually starts increasing again. When V_{DD} reaches 16V, all the internal circuits start operating. If the junction temperature is still higher than 140°C, the PWM controller shuts down immediately.

Frequency Hopping

EMI reduction is accomplished by frequency hopping, which spreads the energy over a wider frequency range than the bandwidth measured by the EMI test equipment. The internal frequency-hopping circuit changes the switching frequency ±2.9kHz.

Physical Dimensions

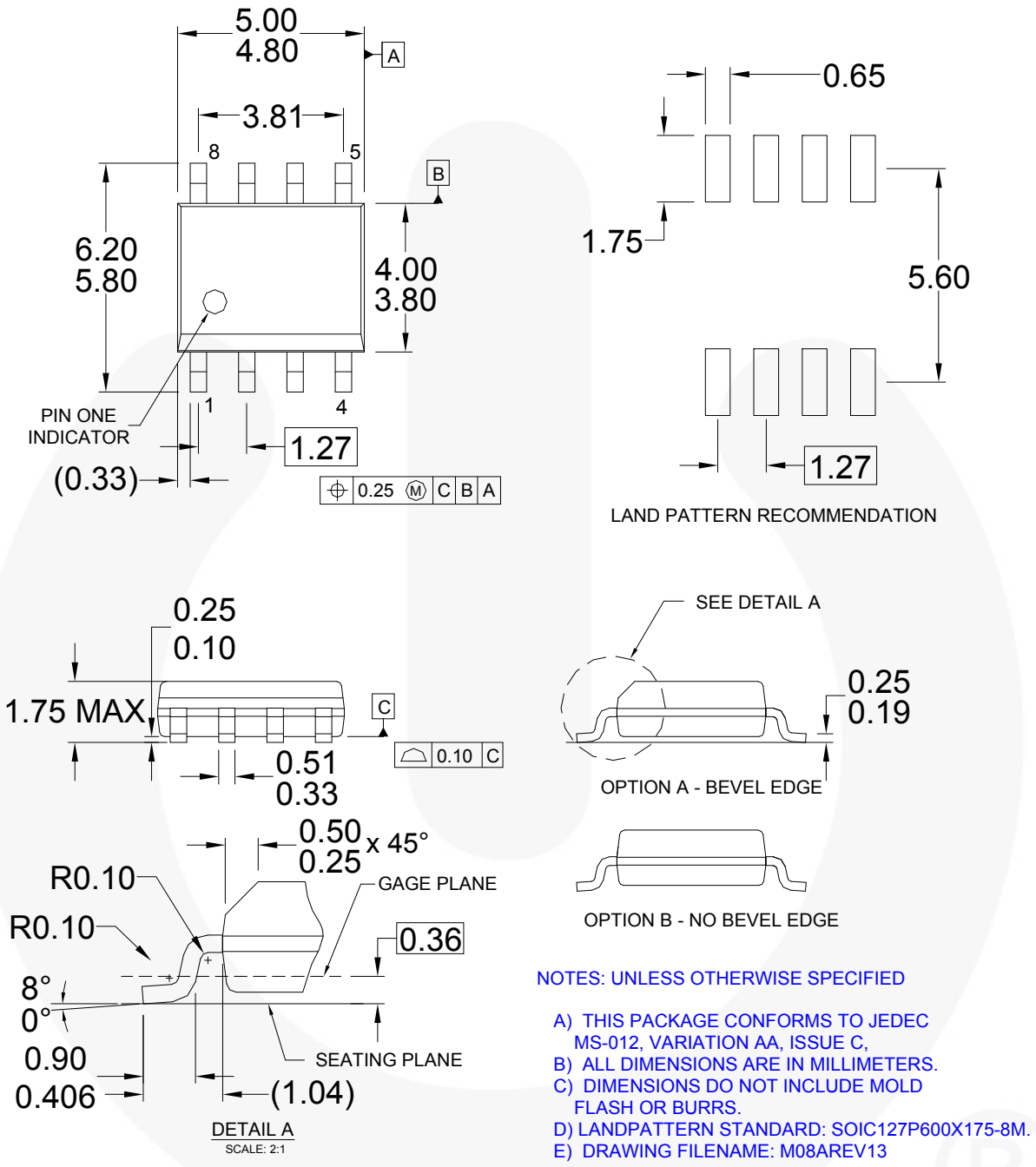

Figure 26. 8-Lead, SOIC, JEDEC MS-012, .150" Narrow Body

Package drawings are provided as a service to customers considering Fairchild components. Drawings may change in any manner without notice. Please note the revision and/or date on the drawing and contact a Fairchild Semiconductor representative to verify or obtain the most recent revision. Package specifications do not expand the terms of Fairchild's worldwide terms and conditions, specifically the warranty therein, which covers Fairchild products.

Always visit Fairchild Semiconductor's online packaging area for the most recent package drawings:
http://www.fairchildsemi.com/packaging/

© 2011 Fairchild Semiconductor Corporation

FAIRCHILD SEMICONDUCTOR®

TRADEMARKS

The following includes registered and unregistered trademarks and service marks, owned by Fairchild Semiconductor and/or its global subsidiaries, and is not intended to be an exhaustive list of all such trademarks.

2Cool™
AccuPower™
AX-CAP™*
BitSiC™
Build it Now™
CorePLUS™
CorePOWER™
CROSSVOLT™
CTL™
Current Transfer Logic™
DEUXPEED®
Dual Cool™
EcoSPARK®
EfficientMax™
ESBC™
F®
Fairchild®
Fairchild Semiconductor®
FACT Quiet Series™
FACT®
FAST®
FastvCore™
FETBench™
FlashWriter®*
FPS™
F-PFS™
FRFET®
Global Power Resource℠
GreenBridge™
Green FPS™
Green FPS™ e-Series™
Gmax™
GTO™
IntelliMAX™
ISOPLANAR™
Making Small Speakers Sound Louder and Better™
MegaBuck™
MICROCOUPLER™
MicroFET™
MicroPak™
MicroPak2™
MillerDrive™
MotionMax™
Motion-SPM™
mWSaver™
OptoHiT™
OPTOLOGIC®
OPTOPLANAR®
PowerTrench®
PowerXS™
Programmable Active Droop™
QFET®
QS™
Quiet Series™
RapidConfigure™
™
Saving our world, 1mW/W/kW at a time™
SignalWise™
SmartMax™
SMART START™
Solutions for Your Success™
SPM®
STEALTH™
SuperFET®
SuperSOT™-3
SuperSOT™-6
SuperSOT™-8
SupreMOS®
SyncFET™
Sync-Lock™
SYSTEM GENERAL®*
The Power Franchise®
the power franchise
TinyBoost™
TinyBuck™
TinyCalc™
TinyLogic®
TINYOPTO™
TinyPower™
TinyPWM™
TinyWire™
TranSiC™
TriFault Detect™
TRUECURRENT®*
μSerDes™
SerDes
UHC®
Ultra FRFET™
UniFET™
VCX™
VisualMax™
VoltagePlus™
XS™

* Trademarks of System General Corporation, used under license by Fairchild Semiconductor.

DISCLAIMER

FAIRCHILD SEMICONDUCTOR RESERVES THE RIGHT TO MAKE CHANGES WITHOUT FURTHER NOTICE TO ANY PRODUCTS HEREIN TO IMPROVE RELIABILITY, FUNCTION, OR DESIGN. FAIRCHILD DOES NOT ASSUME ANY LIABILITY ARISING OUT OF THE APPLICATION OR USE OF ANY PRODUCT OR CIRCUIT DESCRIBED HEREIN; NEITHER DOES IT CONVEY ANY LICENSE UNDER ITS PATENT RIGHTS, NOR THE RIGHTS OF OTHERS. THESE SPECIFICATIONS DO NOT EXPAND THE TERMS OF FAIRCHILD'S WORLDWIDE TERMS AND CONDITIONS, SPECIFICALLY THE WARRANTY THEREIN, WHICH COVERS THESE PRODUCTS.

LIFE SUPPORT POLICY

FAIRCHILD'S PRODUCTS ARE NOT AUTHORIZED FOR USE AS CRITICAL COMPONENTS IN LIFE SUPPORT DEVICES OR SYSTEMS WITHOUT THE EXPRESS WRITTEN APPROVAL OF FAIRCHILD SEMICONDUCTOR CORPORATION.

As used herein:

1. Life support devices or systems are devices or systems which, (a) are intended for surgical implant into the body or (b) support or sustain life, and (c) whose failure to perform when properly used in accordance with instructions for use provided in the labeling, can be reasonably expected to result in a significant injury of the user.
2. A critical component in any component of a life support, device, or system whose failure to perform can be reasonably expected to cause the failure of the life support device or system, or to affect its safety or effectiveness.

ANTI-COUNTERFEITING POLICY

Fairchild Semiconductor Corporation's Anti-Counterfeiting Policy. Fairchild's Anti-Counterfeiting Policy is also stated on our external website, www.fairchildsemi.com, under Sales Support.

Counterfeiting of semiconductor parts is a growing problem in the industry. All manufacturers of semiconductor products are experiencing counterfeiting of their parts. Customers who inadvertently purchase counterfeit parts experience many problems such as loss of brand reputation, substandard performance, failed applications, and increased cost of production and manufacturing delays. Fairchild is taking strong measures to protect ourselves and our customers from the proliferation of counterfeit parts. Fairchild strongly encourages customers to purchase Fairchild parts either directly from Fairchild or from Authorized Fairchild Distributors who are listed by country on our web page cited above. Products customers buy either from Fairchild directly or from Authorized Fairchild Distributors are genuine parts, have full traceability, meet Fairchild's quality standards for handling and storage and provide access to Fairchild's full range of up-to-date technical and product information. Fairchild and our Authorized Distributors will stand behind all warranties and will appropriately address any warranty issues that may arise. Fairchild will not provide any warranty coverage or other assistance for parts bought from Unauthorized Sources. Fairchild is committed to combat this global problem and encourage our customers to do their part in stopping this practice by buying direct or from authorized distributors.

PRODUCT STATUS DEFINITIONS

Definition of Terms

Datasheet Identification	Product Status	Definition
Advance Information	Formative / In Design	Datasheet contains the design specifications for product development. Specifications may change in any manner without notice.
Preliminary	First Production	Datasheet contains preliminary data; supplementary data will be published at a later date. Fairchild Semiconductor reserves the right to make changes at any time without notice to improve design.
No Identification Needed	Full Production	Datasheet contains final specifications. Fairchild Semiconductor reserves the right to make changes at any time without notice to improve the design.
Obsolete	Not In Production	Datasheet contains specifications on a product that is discontinued by Fairchild Semiconductor. The datasheet is for reference information only.

Rev. I61

© 2011 Fairchild Semiconductor Corporation