# 3.3V CMOS Low Jitter XO

FJ

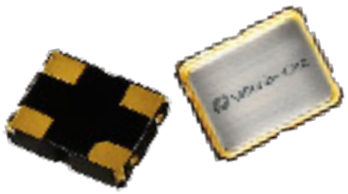

2.5 x 2.0mm Ceramic SMD

## Product Features

- 1 to 156.25 MHz Frequency Range
- <1 ps RMS jitter with fundamental or overtone design
- 3.3V CMOS compatible logic levels
- Designed for standard reflow and washing techniques
- Low power standby mode: 10 µA max
- Pb-free and RoHS/Green compliant

## Product Description

The FJ Series crystal clock oscillator achieves superb jitter and stability over a broad range of operating conditions and frequencies. The output clock signal, generated internally with a non-PLL oscillator design, is compatible with LVCMOS logic levels. The device, available on tape and reel, is contained in a 2.5 x 2.0mm surface-mount ceramic package.

## Applications

Ideal for compact, high-density applications:

- WLAN
- HBA
- Portable Multimedia Player (PMP)
- Notebook Computer
- SDIO / PCMIA CARD
- USB BT Interface
- Bluetooth

## Package:

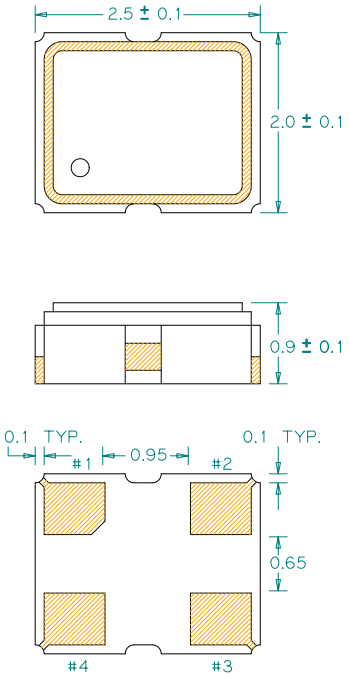


Recommended Land Pattern:

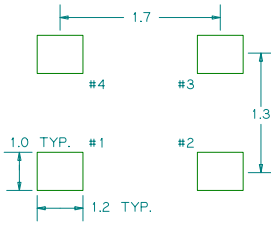


## Pin Functions:

| Pin | Function |
|---|---|
| 1 | OE |
| 2 | Ground |
| 3 | Clock Output |
| 4 | $V_{DD}$ |

## Part Ordering Information:

FJ XXX YYYY

Ⓐ Product Family

Ⓑ XXX = Frequency Code

Ⓒ YYYY = Specification Code

Following the above format, Saronix-eCera part numbers will be assigned upon confirmation of exact customer requirements.

saRonix-eCera™

**FJ Series Crystal Clock Oscillator (XO)**
**2.5 x 2.0mm**

## Electrical Performance

| Parameter | Min. | Typ. | Max. | Units | Notes |
|---|---|---|---|---|---|
| Output Frequency | 1 | | 156.25 | MHz | As specified |
| Supply Voltage | 2.97 | 3.30 | 3.63 | V | |
| Supply Current, Output Enabled | | | 5 | mA | 1 to 156.25 MHz |
| Supply Current, Standby Mode | | | 10 | µA | Output Hi-Z |
| Frequency Stability | | | ±20 to ±50 | ppm | See Note 1 below |
| Operating Temperature Range | -20 | | +70 | °C | Commercial (standard) |
| | -40 | | +85 | | Industrial (standard) |
| Output Logic 0, $V_{OL}$ | | | 10% $V_{DD}$ | V | |
| Output Logic 1, $V_{OH}$ | 90% $V_{DD}$ | | | V | |
| Output Load | | | 15 | pF | |
| Duty Cycle | 45 | | 55 | % | Measured 50% $V_{DD}$ |
| Rise and Fall Time | | | 7 | ns | Measured 20/80% of waveform |
| Jitter, Phase | | | 1 | ps RMS (1-σ) | 12kHz to 20 MHz frequency band |
| Jitter, Accumulated | | | 5 | ps RMS (1-σ) | 20.000 adjacent periods |
| Jitter, Total | | | 50 | ps pk-pk | 100.000 random periods |

**Notes:**
1. Stability includes all combinations of operating temperature, load changes, rated input (supply) voltage changes, initial calibration tolerance (25°C), aging (1 year at 25°C average effective ambient temperature), shock and vibration.
2. For specifications othere than those listed, please contact sales.

## Output Enable / Disable Function

| Parameter | Min. | Typ. | Max. | Units | Notes |
|---|---|---|---|---|---|
| Input Voltage (pin 1), Output Enable | 0.7 $V_{DD}$ | | | V | or open |
| Input Voltage (pin 1), Output Disable (low power standby) | | | 0.3 $V_{DD}$ | V | Output is Hi-Z |
| Internal Pullup Resistance | 30 | | | kΩ | |
| Output Disable Delay | | | 100 | ns | |
| Output Enable Delay | | | 10 | ms | |

## Absolute Maximum Ratings

| Parameter | Min. | Typ. | Max. | Units | Notes |
|---|---|---|---|---|---|
| Storage Temperature | -55 | | +125 | °C | |

**For the latest product information visit:** http://www.pericom.com/products/timing/oscillators/FJ3.3/

**For test circuit go to**: http://www.pericom.com/pdf/sre/tc_hcmos2.pdf

**For soldering reflow profile and reliability test ratings go to:** http://www.pericom.com/pdf/sre/reflow.pdf

**For tape and reel information go to:** http://www.pericom.com/pdf/sre/tr_2520_xo.pdf