FAIRCHILD SEMICONDUCTOR™

June 2002
Revised June 2002

FIN1026
3.3V LVDS 2-Bit High Speed Differential Receiver

General Description

This dual receiver is designed for high speed interconnects utilizing Low Voltage Differential Signaling (LVDS) technology. The receiver translates LVDS levels, with a typical differential input threshold of 100mV, to LVTTL signal levels. LVDS provides low EMI at ultra low power dissipation even at high frequencies. This device is ideal for high speed transfer of clock and data.

The FIN1026 can be paired with its companion driver, the FIN1025, or any other LVDS driver.

Features

- Greater than 400Mbs data rate
- Flow-through pinout simplifies PCB layout
- 3.3V power supply operation
- 0.4ns maximum differential pulse skew
- 2.5ns maximum propagation delay
- Low power dissipation
- Power-Off protection
- Fail safe protection for open-circuit, shorted and terminated non-driven input conditions
- Meets or exceeds the TIA/EIA-644 LVDS standard
- 14-Lead TSSOP package saves space

Ordering Code:

Order Number	Package Number	Package Description
FIN1026MTC	MTC14	14-Lead Thin Shrink Small Outline Package (TSSOP), JEDEC MO-153, 4.4mm Wide

Devices also available in Tape and Reel. Specify by appending the suffix letter "X" to the ordering code.

Connection Diagram

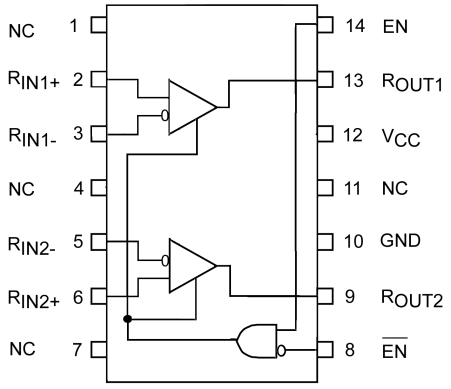

Pin Descriptions

Pin Name	Description
R_{OUT1}, R_{OUT2}	LVTTL Data Outputs
R_{IN1+}, R_{IN2+}	Non-Inverting LVDS Inputs
R_{IN1-}, R_{IN2-}	Inverting LVDS Inputs
EN	Driver Enable Pin
$\overline{EN}$	Inverting Driver Enable Pin
V_{CC}	Power Supply
GND	Ground
NC	No Connect

Truth Table

Inputs				Outputs
EN	$\overline{EN}$	R_{IN+}	R_{IN-}	R_{OUT}
H	L or Open	H	L	H
H	L or Open	L	H	L
H	L or Open	Fail Safe Condition		H
X	H	X	X	Z
L or Open	X	X	X	Z

H = HIGH Logic Level
L = LOW Logic Level
X = Don't Care
Z = High Impedance
Fail Safe = Open, Shorted, Terminated

© 2002 Fairchild Semiconductor Corporation

Absolute Maximum Ratings(Note 1)

Supply Voltage (V_{CC})	−0.5V to +4.6V
LVDS DC Input Voltage (V_{IN})	−0.5V to +4.6V
LVTTL DC Input Voltage (V_{IN})	−0.5V to 6V
DC Output Voltage (V_{OUT})	−0.5V to 6V
DC Output Current (I_O)	16mA
Storage Temperature Range (T_{STG})	−65°C to +150°C
Max Junction Temperature (T_J)	150°C
Lead Temperature (T_L)	
(Soldering, 10 seconds)	260°C
ESD (Human Body Model)	10,000V
ESD (Machine Model)	600V

Recommended Operating Conditions

Supply Voltage (V_{CC})	3.0V to 3.6V
Magnitude of Differential Voltage ($\|V_{ID}\|$)	100mV to V_{CC}
Common-Mode Input Voltage (V_{IC})	0.05V to 2.35V
Input Voltage (V_{IN})	0 to V_{CC}
Operating Temperature (T_A)	−40°C to +85°C

Note 1: The "Absolute Maximum Ratings": are those values beyond which damage to the device may occur. The databook specifications should be met, without exception, to ensure that the system design is reliable over its power supply, temperature and output/input loading variables. Fairchild does not recommend operation of circuits outside databook specification.

DC Electrical Characteristics

Over supply voltage and operating temperature ranges, unless otherwise specified

Symbol	Parameter	Test Conditions	Min	Typ (Note 2)	Max	Units
V_{TH}	Differential Input Threshold HIGH	See Figure 1, V_{IC} = +0.05V, +1.2V, or 2.35V			100	mV
V_{TL}	Differential Input Threshold LOW	See Figure 1, V_{IC} = +0.05V, +1.2V, or 2.35V	−100			mV
I_{IN}	Input Current	V_{IN} = 0V or V_{CC}			±20	µA
$I_{I(OFF)}$	Power-Off Input Current	V_{CC} = 0V, V_{IN} = 0V or 3.6V			±20	µA
V_{OH}	Output HIGH Voltage	I_{OH} = −100 µA	V_{CC} −0.2	3.29		V
		I_{OH} = −8 mA	2.4	3.1		
V_{OL}	Output LOW Voltage	I_{OH} = 100 µA		0	0.2	V
		I_{OL} = 8 mA		0.18	0.5	
I_{OZ}	Disabled Output Leakage Current	EN = 0.8 and EN* = 2V, V_{OUT} = 3.6V or 0V			±20	µA
V_{IK}	Input Clamp Voltage	I_{IK} = −18 mA	−1.5	−0.8		V
I_{OS}	Output Short Circuit Current	Receiver Enabled, V_{OUT} = 0V (one output shorted at a time)	-15		−100	mA
I_{CCZ}	Disabled Power Supply Current	Receiver Disabled		2.6	5	mA
I_{CC}	Power Supply Current	Receiver Enabled, (R_{IN+} = 1V and R_{IN-} = 1.4V) or (R_{IN+} = 1.4V and R_{IN-} = 1V)		4.8	8.5	mA

Note 2: All typical values are at T_A = 25°C and with V_{CC} = 3.3V.

AC Electrical Characteristics

Over supply voltage and operating temperature ranges, unless otherwise specified

Symbol	Parameter	Test Conditions	Min	Typ (Note 3)	Max	Units
t_{PLH}	Propagation Delay LOW-to-HIGH	$\|V_{ID}\|$ = 400 mV, C_L = 10 pF See Figure 1 and Figure 2	1.0		2.5	ns
t_{PHL}	Propagation Delay HIGH-to-LOW		1.0		2.5	ns
t_{TLH}	Output Rise Time (20% to 80%)			0.7	1.2	ns
t_{THL}	Output Fall Time (80% to 20%)			0.7	1.2	ns
$t_{SK(P)}$	Pulse Skew $\|t_{PLH} - t_{PHL}\|$				0.4	ns
$t_{SK(LH)}$ $t_{SK(HL)}$	Channel-to-Channel Skew (Note 4)				0.3	ns
$t_{SK(PP)}$	Part-to-Part Skew (Note 5)				1.0	ns
f_{MAX}	Maximum Operating Frequency (Note 6)		200	375		MHz
t_{PZH}	LVTTL Output Enable Time from Z to HIGH	R_L = 1kΩ, C_L = 10 pF, See Figure 3			6.0	ns
t_{PZL}	LVTTL Output Enable Time from Z to LOW				6.0	ns
t_{PHZ}	LVTTL Output Disable Time from HIGH to Z				6.0	ns
t_{PLZ}	LVTTL Output Disable Time from LOW to Z				6.0	ns
C_{IN}	Input Capacitance	Enable Inputs		3.0		pF
		R_{IN} Inputs		4.2		
C_{OUT}	Output Capacitance			6		pF

Note 3: All typical values are at T_A = 25°C and with V_{CC} = 3.3V.

Note 4: $t_{SK(LH)}$, $t_{SK(HL)}$ is the skew between specified outputs of a single device when the outputs have identical loads and are switching in the same direction.

Note 5: $t_{SK(PP)}$ is the magnitude of the difference in propagation delay times between any specified terminals of two devices switching in the same direction (either LOW-to-HIGH or HIGH-to-LOW) when both devices operate with the same supply voltage, same temperature, and have identical test circuits.

Note 6: f_{MAX} Criteria: Input $t_R = t_F$ < 1 ns, V_{ID} = 300 mV, (1.05V to 1.35V pp), 50% duty cycle; Output duty cycle 40% to 60%, V_{OL} < 0.5V, V_{OH} > 2.4V. All channels switching in phase.

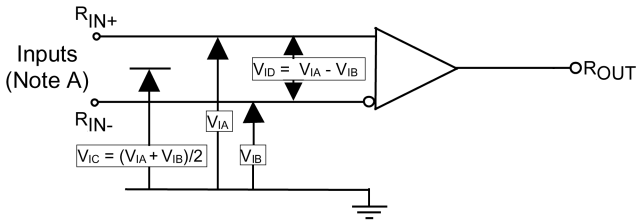

Note A: All differential input pulses have frequency = 10MHz, t_R or t_F = 1ns

FIGURE 1. Differential Receiver Voltage Definitions

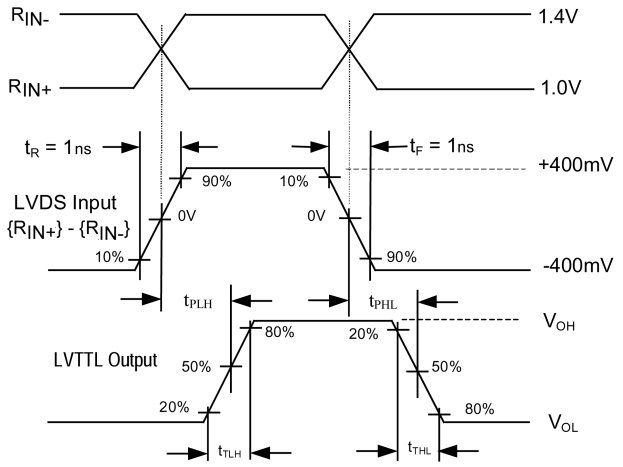

FIGURE 2. LVDS Input to LVTTL Output AC Waveforms

Test Circuit for LVTTL Outputs

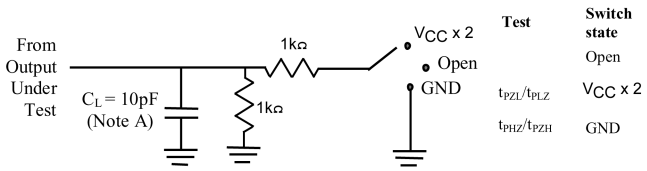

Voltage Waveforms Enable and Disable Times

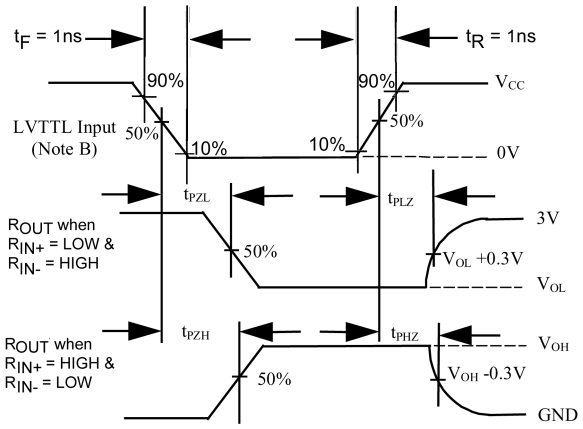

FIGURE 3. LVTTL Outputs Test Circuit and AC Waveforms

Physical Dimensions inches (millimeters) unless otherwise noted

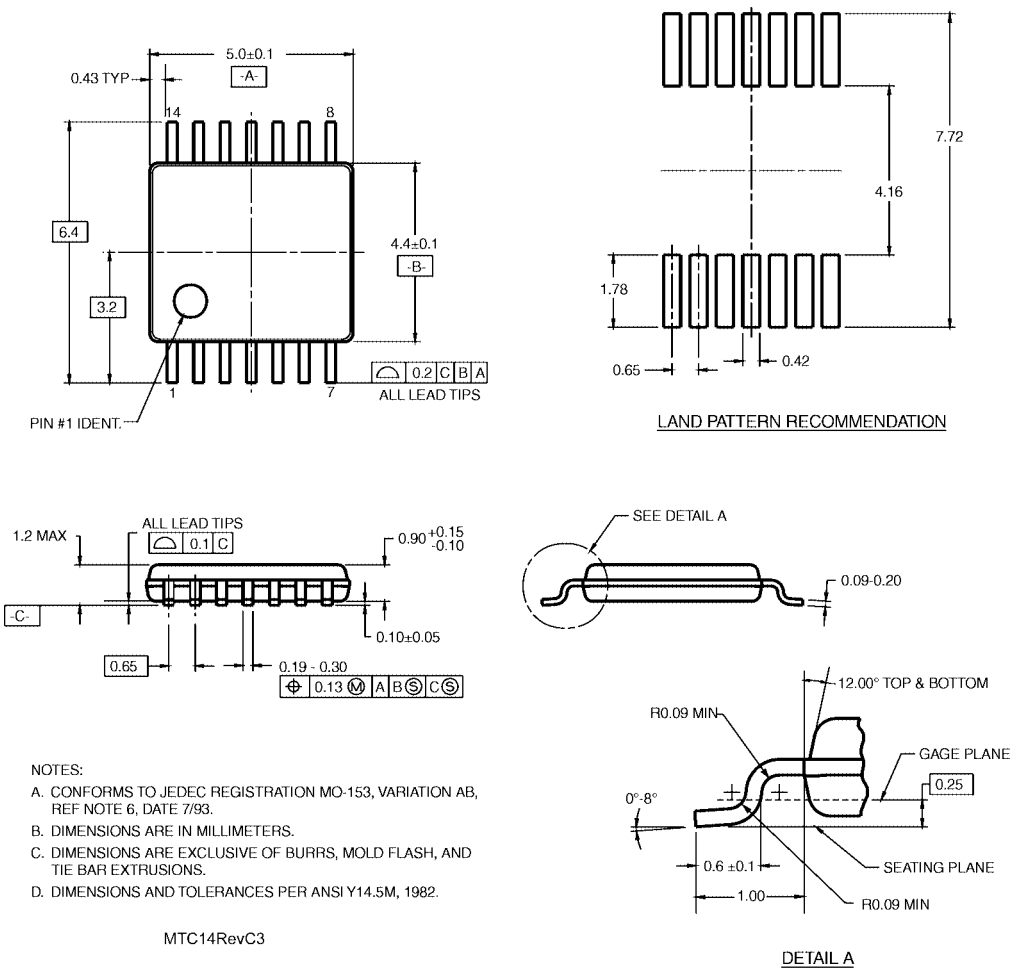

NOTES:

A. CONFORMS TO JEDEC REGISTRATION MO-153, VARIATION AB, REF NOTE 6, DATE 7/93.

B. DIMENSIONS ARE IN MILLIMETERS.

C. DIMENSIONS ARE EXCLUSIVE OF BURRS, MOLD FLASH, AND TIE BAR EXTRUSIONS.

D. DIMENSIONS AND TOLERANCES PER ANSI Y14.5M, 1982.

MTC14RevC3

14-Lead Thin Shrink Small Outline Package (TSSOP), JEDEC MO-153, 4.4mm Wide
Package Number MTC14

Fairchild does not assume any responsibility for use of any circuitry described, no circuit patent licenses are implied and Fairchild reserves the right at any time without notice to change said circuitry and specifications.

LIFE SUPPORT POLICY

FAIRCHILD'S PRODUCTS ARE NOT AUTHORIZED FOR USE AS CRITICAL COMPONENTS IN LIFE SUPPORT DEVICES OR SYSTEMS WITHOUT THE EXPRESS WRITTEN APPROVAL OF THE PRESIDENT OF FAIRCHILD SEMICONDUCTOR CORPORATION. As used herein:

1. Life support devices or systems are devices or systems which, (a) are intended for surgical implant into the body, or (b) support or sustain life, and (c) whose failure to perform when properly used in accordance with instructions for use provided in the labeling, can be reasonably expected to result in a significant injury to the user.
2. A critical component in any component of a life support device or system whose failure to perform can be reasonably expected to cause the failure of the life support device or system, or to affect its safety or effectiveness.

www.fairchildsemi.com