User guide for FHS 40-P Current Transducer

FHS 40-P Kit 9 (G2.00.23.108.0)

Evaluation PCB

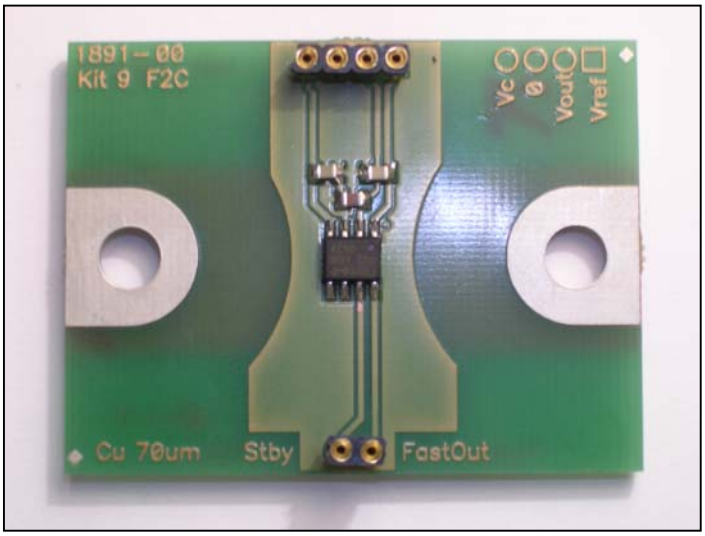

Connectors Pin-OUT

The board has two single row connectors J1 and J2.

- The four pin one (J1) makes possible to supply the board and access to the output voltage easily.
  It has the following pin-out:

Pin #	Name	Description J1 connector
1	$\mathbf{V}_{REF}$	Reference voltage input/output
2	$\mathbf{V}_{OUT}$	Output voltage is proportional to the current in the PCB track, $\mathbf{V}_{OUT} = \mathbf{V}_{REF} + \mathbf{G}_I * \mathbf{I}_P$ Note that the output voltage is positive when the current flows inside the tracks according to the direction marked "$\mathbf{I}_P$→" on the PCB
3	0	0 V
4	$\mathbf{V}_C$	Positive supply voltage 4.75-5.25V; typical consumption 15 mA

- The two pin one (J2) makes possible to access to the fast output voltage and standby input easily.
  It has the following pin-out:

Pin #	Name	Description J2 connector
1	$\mathbf{V}_{OUTFAST}$	$\mathbf{V}_{OUTFAST}$, fast output signal; note that this output is opposite to $\mathbf{V}_{OUT}$ (see datasheet for connection)
2	Standby	Standby, Set operating or Standby modes (see datasheet for connection)

Manufacturer and reference for J1, J2: PRECI-DIP, 310-13-120-41-001001.

Thermal Capability

The enclosed evaluation PCB has tracks with thickness of 70 µm.

The dimensions of the tracks drawn on the evaluation PCB lead to some limitations on the maximum continuous current which can go through the PCB track.

Remark: under normal operating conditions, temperature of some parts of this product might exceed 70°C.

Primary track dimensions [mm]:

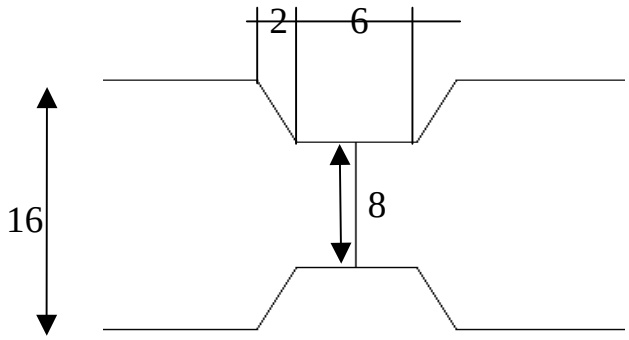



Thermal simulation Cu 70 µm:

Track thickness 70 µm, PCB thickness 1.6 mm, $\mathbf{T}_A$ = 81°C, natural convection, $\mathbf{I}_{PN}$ = 30 A rms or A DC.

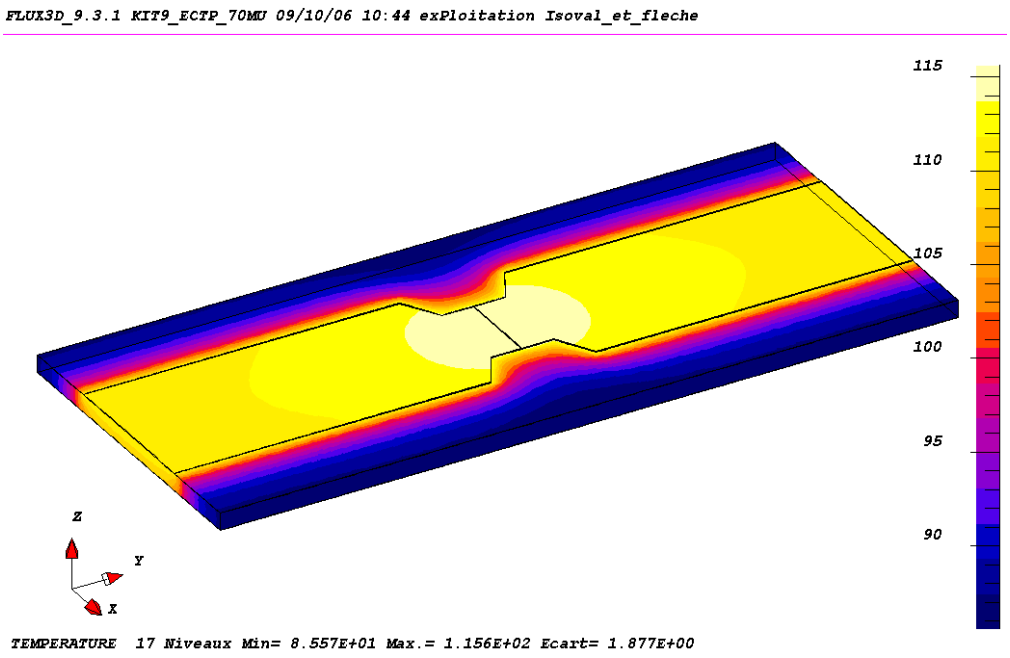

The following figures should be taken into account to avoid overheating:

(T primary track = 115 °C)

Maxi rms current I_{PN} [A]	Cu 35 µm		Cu 70 µm	
	T_A [°C]	ΔT [°C]	T_A [°C]	ΔT [°C]
0	115	0	115.0	0
10.0	106.8	8.2	111.3	3.7
20.0	81.9	33.1	100.1	14.9
30.0	39.6	75.4	81.3	33.7
40.0	NA	NA	54.6	60.4
50.0	NA	NA	20.7	94.3

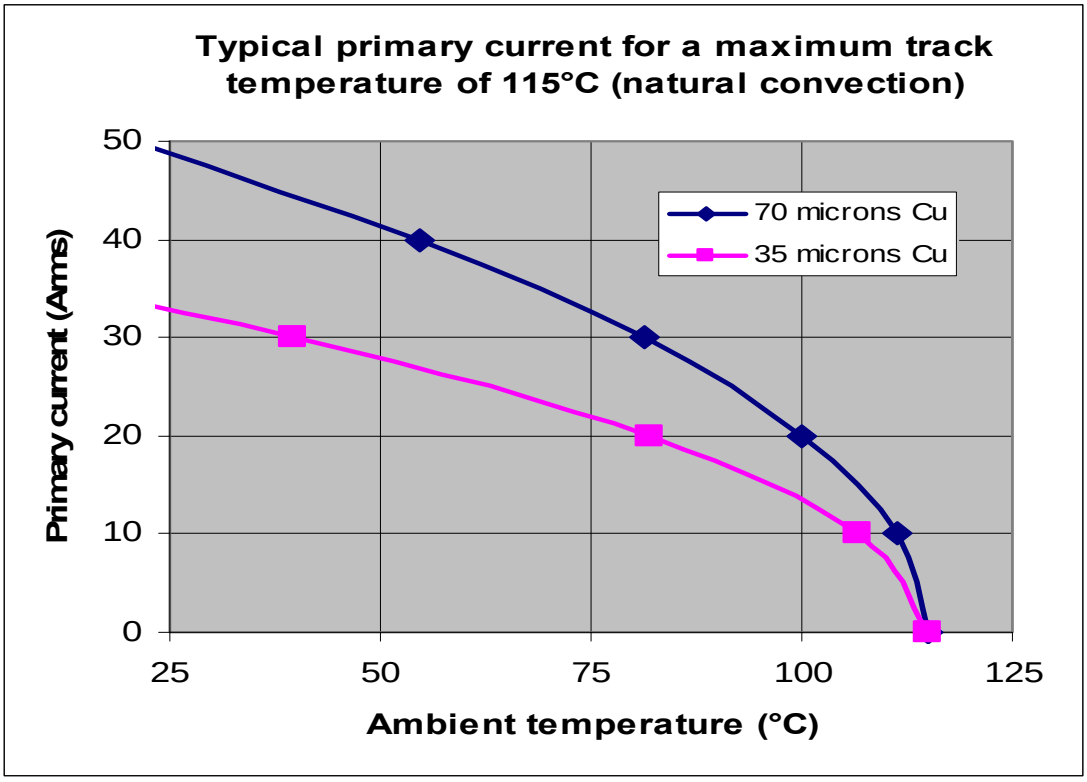

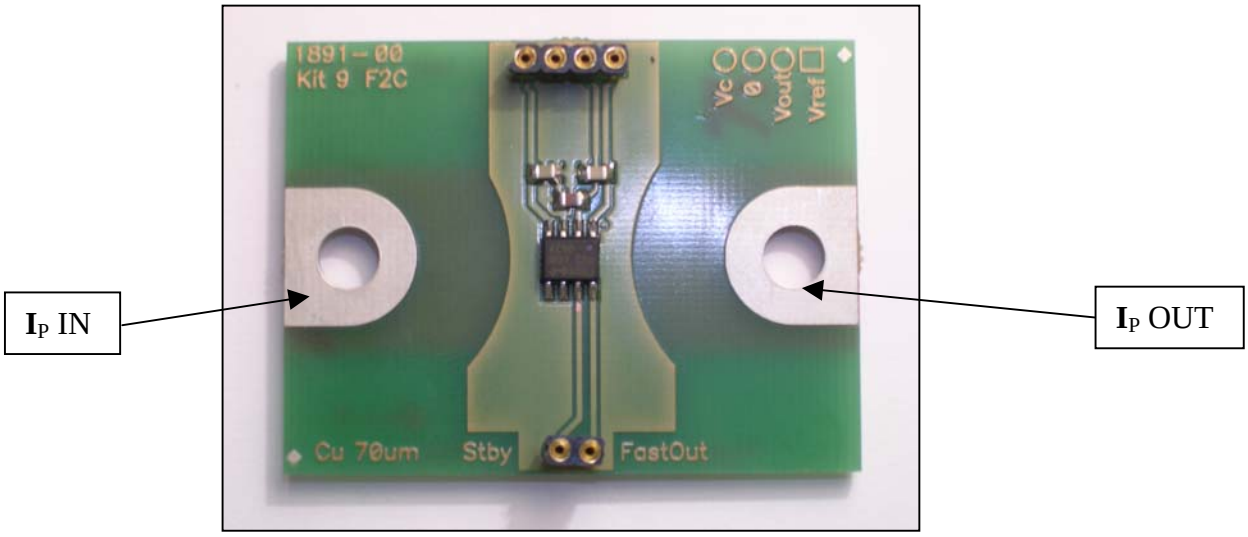

Connect then the primary between pins I_P IN and I_P OUT.

Features

Magnetic field sensitivity	typical 600	mV/mT
Current sensitivity	typical 25.8 mini (typ-3σ): 25.4 maxi (typ+3σ): 26.3	mV/A
Measuring range	typical ± 78 Unless maxi rms current reached, see Thermal Capability.	A
Frequency range	DC – 100k	Hz

Isolation characteristics

	Symbol	**Unit**	**Value**
Rms voltage for AC isolation test, 50-60 Hz, 1 min	**V_D**	kV	4.3
Impulse withstand voltage 1.2/50 µs	**V_W**	kV	7.8
Creepage/Clearance distance	**dCp/dCl**	mm	8
Comparative tracking index (PCB FR4)	**CTI**	V	200

Application example

According to EN 50178 and IEC 61010-1 standards and following conditions:

- Rated isolation voltage 300 V (IEC 61010-1)
- Reinforced isolation
- Over voltage category OV III
- Pollution degree PD1
- Non-uniform field

Safety



This transducer must be used in electric/electronic equipment with respect to applicable standards and safety requirements in accordance with the manufacturer's operating instructions.



Caution, risk of electrical shock

When operating the transducer, certain parts of the module can carry hazardous voltage
(eg: primary busbar, power supply).
Ignoring this warning can lead to injury and/or cause serious damage.
This transducer is a built-in device, whose conducting parts must be inaccessible after installation.
A protective housing or additional shield could be used.
Main supply must be able to be disconnected.