NEW

0.5mm pitch, 2.5mm above the board,high speed transmission connector for shielded FFC

FH41 Series

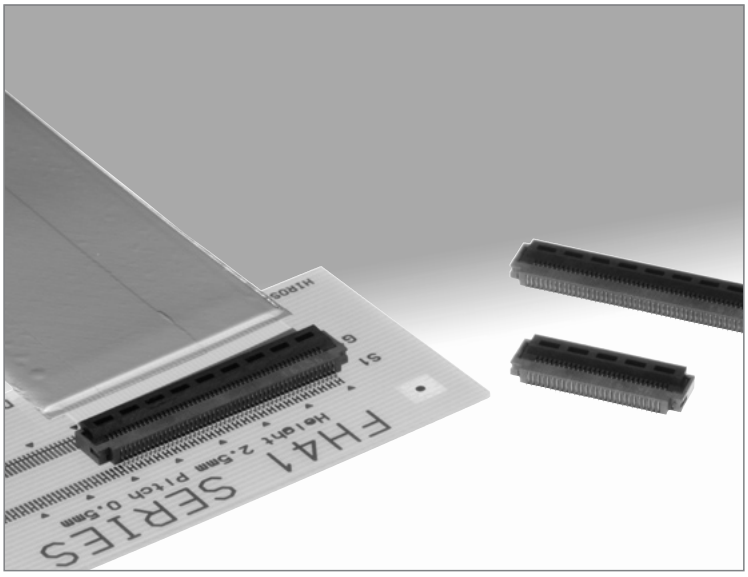

THine Electronics, Inc.
Next-generation chipset (V-by-One®HS*)
Compatible connector

＊High-speed serial interface technology for image transmission

■Features

1.Compatibility with impedance control, shield FFC

The FH41 series is equipped with a GND exclusive terminal and available for connection with impedance control, shield FFC.

2.Differential impedance 100Ω±10%

The FH41 series features a terminal design considering impedance control, and making high speed transmission possible.

3.Highly reliable connection, tough structure

The FH41 series follows the structure of the proven FH28 series, and achieves:
- High reliability thanks to the FFC positioning mechanism
- Reliable connection operation and no unlocking thanks to the durable structure.

4.One-finger operation of the actuator

Proven (in several other Hirose's connectors!) Flip-Lock rotating actuator assures reliable mechanical and electrical connection with FPC, confirming it with a definite tactile feel.

5.Board placement with automatic equipment

Flat upper surface and tape and reel packaging facilitate vacuum pick-up and placement.
Standard reel packaging contains 2,500 connectors.

6.Halogen-free ＊

＊As defined by IEC61249-2-21
Br-900ppm maximum, Cl-900ppm maximum,
Cl + Br combined-1,500ppm maximum

Space saving (68 pos. shown)

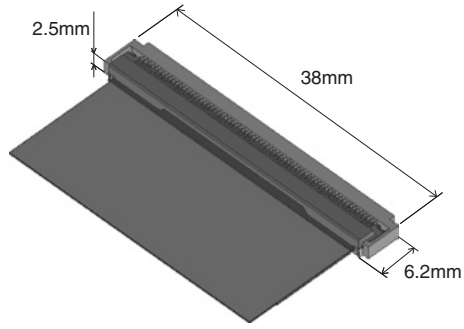

figure.1

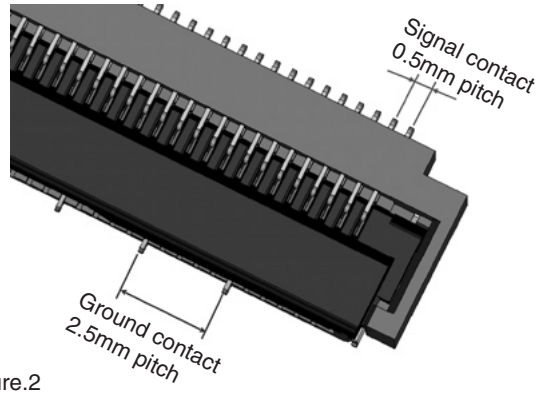

figure.2

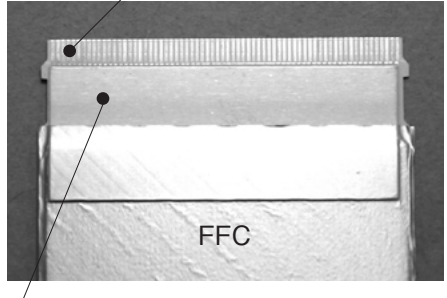

figure.3

■Specifications

Ratings	Current rating 0.5 A(Note1) Voltage rating 50 Vrms AC	Operating temperature range: -40 to +85°C (Note 2) Operating humidity range: Relative humidity 90% max. (No condensation)	Storage temperature range: -10 to +50°C (Note 3) Storage humidity range: Relative humidity 90% max. (No condensation)

Recommended FPC Thickness	0.3 ±0.05 mm, Gold plated contact pads (GND plate:t=0.5±0.05mm,tinÐplateing)

Item	Specification	Conditions
1.Insulation resistance	500 MΩ min.	100 V DC
2.Withstanding voltage	No flashover or insulation breakdown	150 Vrms AC / one minute
3.Contact resistance	100 mΩ max. ✻ Including FFC conductor resistance	1 mA, AC max (AC: 1kHz)
4.Durability	Contact resistance: 100 mΩ max. No damage, cracks, or parts dislocation	20 cycles
5.Vibration	No electrical discontinuity of 1μs or longer Contact resistance: 100 mΩ max. No damage, cracks, or parts dislocation	Frequency: 10 to 55 Hz, single amplitude of 0.75mm, 10 cycles in each of the 3 directions
6.Shock	No electrical discontinuity of 1μs or longer Contact resistance: 100 mΩ max. No damage, cracks, or parts dislocation	Acceleration of 981m/s^2 6 ms duration, sine halfwave, 3 cycles in each of the 3 axis
7.Humidity (Steady state)	Contact resistance: 100 mΩ max. Insulation resistance: 50 MΩ min. No damage, cracks, or parts dislocation	96 hours at 40°C and humidity of 90 to 95%
8.Temperature cycle	Contact resistance: 100 mΩ max. Insulation resistance: 50 MΩ min. No damage, cracks, or parts dislocation	Temperature : -40°C → +15°C to +35°C → +85°C → +15°C to +35°C Time: 30 → 2 to 3 → 30 → 2 to 3 minutes 5 cycles
9.Resistance to soldering heat	No deformation of components affecting performance	Reflow: At the recommended temperature profile Manual soldering: 350°C ±5°C for 5 seconds

Note 1. When passing the current through all of the contacts, use 70% of the rated current.
Note 2. Includes temperature rise caused by current flow.
Note 3. The term "storage" refers to products stored for a long period prior to mounting and use.
The operating temperature and humidity range covers the non-conducting condition of installed connectors in storage, shipment or during transportation after board mounting.
Note 4. Information contained in this catalog represents general requirements for this Series.
Contact us for the drawings and specifications for a specific part number shown.

■Materials

Part	Material	Finish	Remarks
Insulator	LCP	Color:Gray	UL94V-0
		Color:Black	
Contacts	Phosphor bronze	Gold plated	———
		Pure tin reflow plated	
Metal fittings	Brass		

■Ordering information

FH 41 – 50S – 0.5 SH (05)
❶ ❷ ❸ ❹ ❺ ❻

❶ Series name : FH	❺ SH : SMT horizontal mounting type
❷ Series No.: 41	❻ Plating specifications :(05)…Gold plated
❸ Number of positions : 28 to 68	
❹ Contact pitch : 0.5mm	

■Connector Dimensions

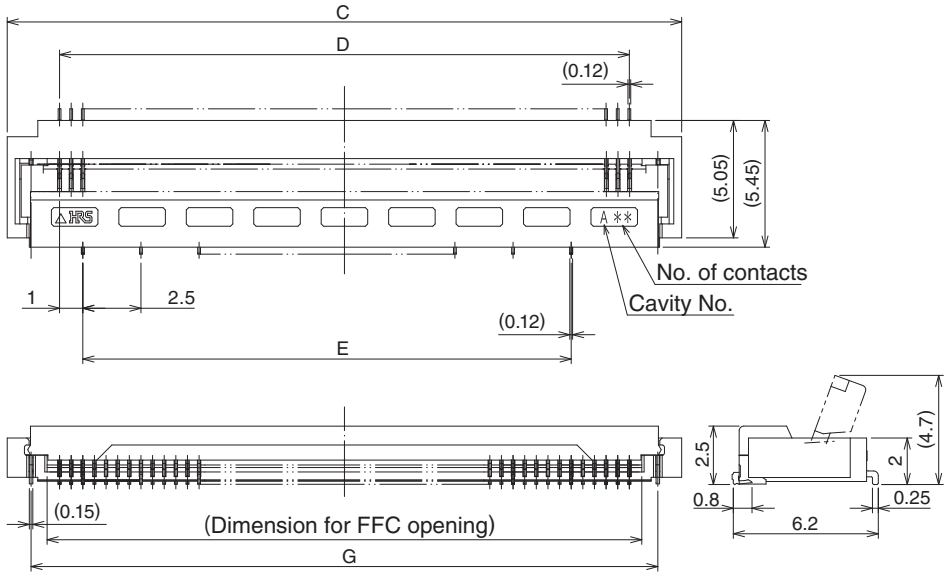

Note 1. The coplanarity of each terminal lead within specified dimension is 0.1 mm Max.
2. Packaged on tape and reel only. Check packaging specification.
3. Slight variations in color of the plastic compounds do not affect form, fit or function of the connector.
4. After reflow, the terminal plating may change color, however this does not represent a quality issue.

Unit : mm

Part Number	CL No.	Number of contacts	No. of Contacts(GND contacts)	C	D	E	F	G
FH41-28S-0.5SH(05)	580-2208-1-05	28	5	18	13.5	10	14.57	15.95
FH41-40S-0.5SH(05)	580-2205-3-05	40	8	24	19.5	17.5	20.57	21.95
FH41-50S-0.5SH(05)	580-2204-0-05	50	10	29	24.5	22.5	25.57	26.95
FH41-68S-0.5SH(05)	580-2202-5-05	68	13	38	33.5	30	34.57	35.95

Note1.Tape and reel packaging (2,500 pieces/reel).
Order by number of reels.

■Recommended PCB mounting pattern and metal mask dimensions

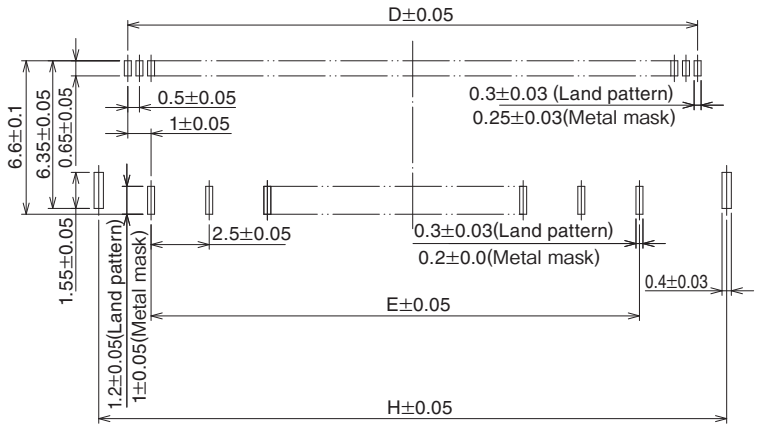

Recommended metal mask thickness t=0.1

■Recommended FFC Dimensions

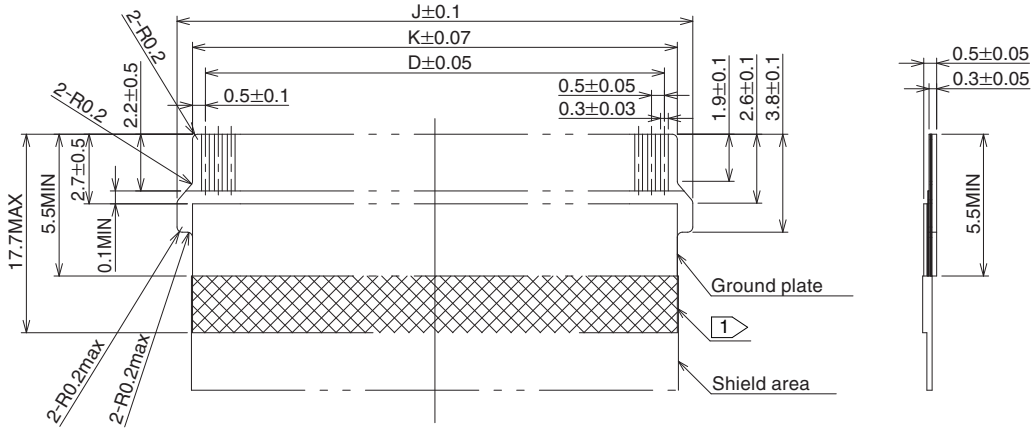

Note 1 Please overlap shield plate on ground plate.

Unit : mm

Part Number	CL No.	Number of contacts	No. of Contacts(GND contacts)	H	J	K
FH41-28S-0.5SH(05)	580-2208-1-05	28	5	16	15.7	14.5
FH41-40S-0.5SH(05)	580-2205-3-05	40	8	22	21.7	20.5
FH41-50S-0.5SH(05)	580-2204-0-05	50	10	27	26.7	25.5
FH41-68S-0.5SH(05)	580-2202-5-05	68	13	36	35.7	34.5

Note1.Tape and reel packaging (2,500 pieces/reel).
Order by number of reels.

■Recommended FFC construction

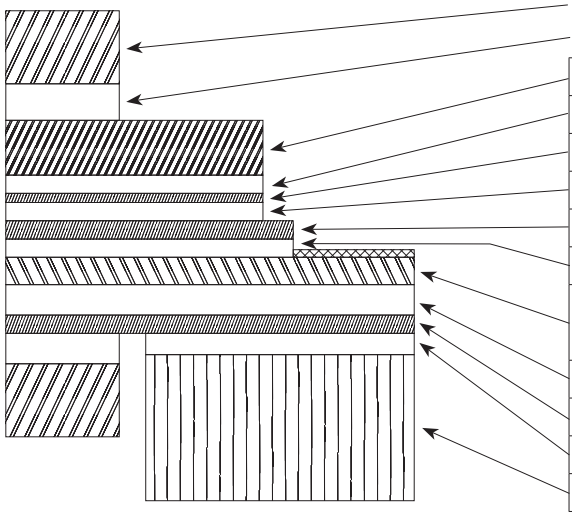

Material Name	Material	thickness(μm)	thickness(μm)	
Shielding Material				
Conouctiye Adhesive	Polyester Type			
Copper Film (Tin Plated)		70		1
Adhesive	Acrylic Type	24		1
Base Material	Polyester Type	12		1
Adhesive	Acrylic Type	24		1
Insulated Layer	Polyester Type	25		
Adhesive	Polyester Type	35		
Soft Copper Film (Nickel Under Plated / Gold Plated)		35	35	
Adhesive	Polyester Type	35	35	
Insulated Layer	Polyester Type	25	25	
Adhesive	Polyester Type	30	30	
Siiffener	Polyester Type	188	188	
	Total	503	313	

Note 1 Please overlap shield plate on ground plate.

■Packaging Specification

●Embossed Carrier Tape Dimensions

(Tape width of 24mm max.)

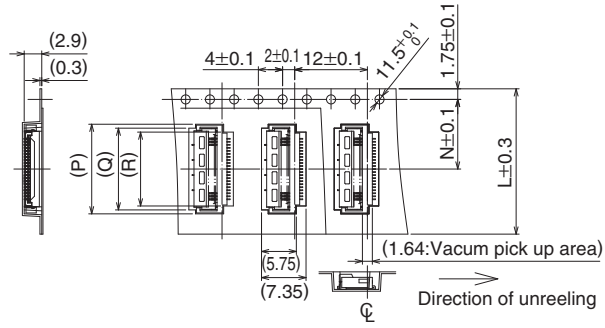

(Tape width of 32mm min.)

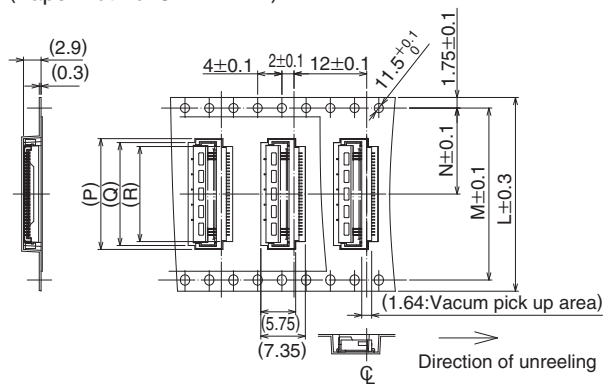

●Reel Dimensions

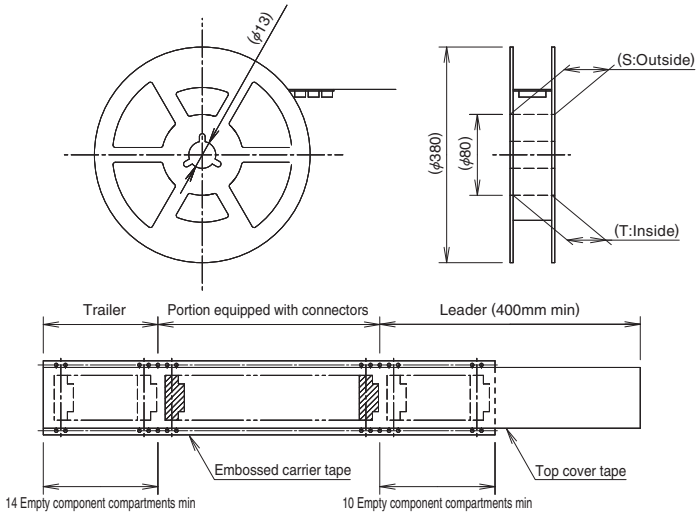

Unit : mm

Part Number	CL No.	Number of contacts	No. of Contacts(GND contacts)	L	M	N	P	Q	R	S	T
FH41-28S-0.5SH(05)	580-2208-1-05	28	5	32	28.4	14.2	18.3	17	15.7	37.4	33.4
FH41-40S-0.5SH(05)	580-2205-3-05	40	8	44	40.4	20.2	24.3	23	21.7	49.4	45.4
FH41-50S-0.5SH(05)	580-2204-0-05	50	10	44	40.4	20.2	29.3	28	26.7	49.4	45.4
FH41-68S-0.5SH(05)	580-2202-5-05	68	13	56	52.4	26.2	38.3	37	35.7	61.4	57.4

■Temperature Profile

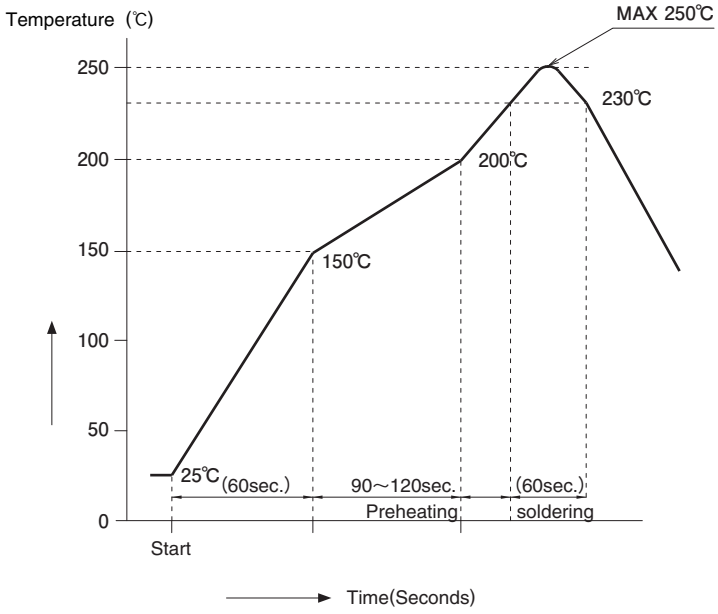

HRS test condition

Solder method	:Reflow, IR/hot air
Environment	:Room air
Solder composition	:Paste, 96.5%Sn/3.0%Ag/0.5%Cu (Senju Metal Industry, Co., Ltd.'s Part Number:M705-221CM5-32-10.5)
Test board	:Glass epoxy 30mm×60mm×0.8mm thick
Land dimensions	:0.3mm×0.65mm, 0.3mm×1.2mm
Metal mask	:0.25×0.65, 0.2×0.1mm thick

The temperature profiles shown are based on the above conditions.
In individual applications the actual temperature may vary, depending on solder paste type, volume / thickness and board size / thickness. Consult your solder paste and equipment manufacturer for specific recommendations.

■Operation and Precautions

Operation	Precautions
1.FFC insertion procedure. **Connector installed on the board.** ❶ Lift up the actuator. Use thumb or index finger 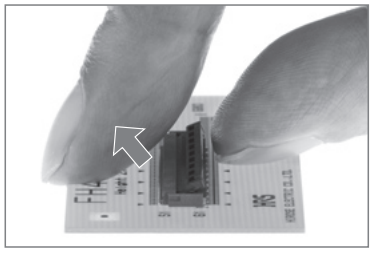	❶ Do not force the actuator to open beyond its fully open position. Do not use any type of tool to open the actuator. 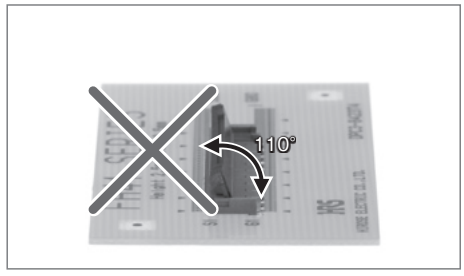
❷ Fully insert the FFC in the connector parallel to mounting surface, with the exposed conductive traces facing down. 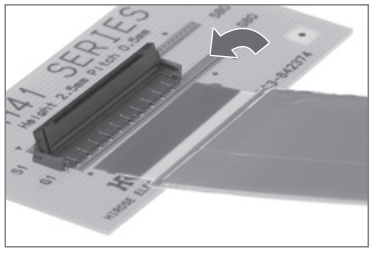	❷ Do not forcefully bend the FFC upward. Consult FFC manufacturer for the recommended bend radiuses. 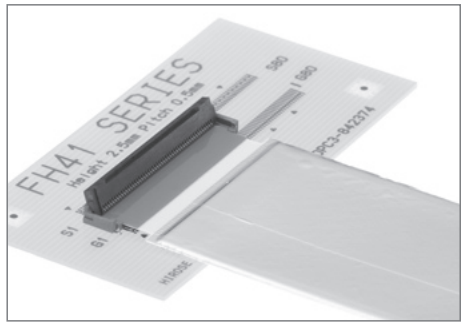
❸ Rotate down the actuator until firmly closed. It is critical that the inserted FFC is not moved and remains fully inserted. 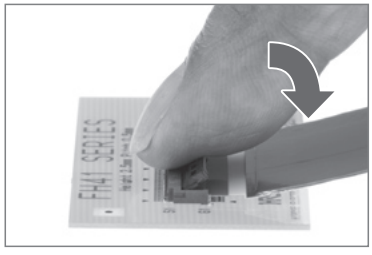	❸ For connectors with multiple contacts, such as 80 pos. rotate down the actuator pushing at both ends. 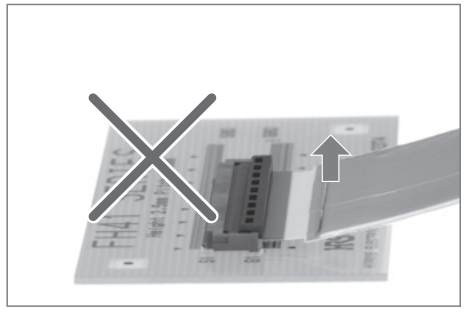
2.FFC removal Fully open the actuator. Carefully withdraw the FFC exercising caution not to deform or damage it. 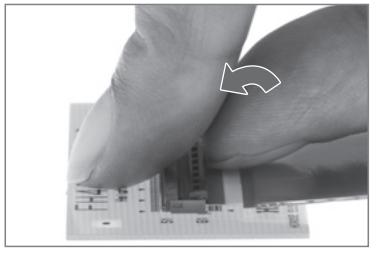	❹ Load to FFC Be very careful not to apply any force to the connector directly after inserting FFC. Otherwise, the connector may become unlocked or the FFC may break. In particular, design the FFC layout with care not to bend it sharply upward in a vertial direction near the insertion opening. Fix the FFC when loads are applied to it continuously.

■Precautions (mating/un-mating FFC with the retention tabs)

Operation	Precautions

1.How to insert

Insert the cable into the interspace between the mold walls (⟶) at both ends of entrance where the connector is inserted and the guide walls (⟹) at both ends of interior connector so the cable tabs are properly located.

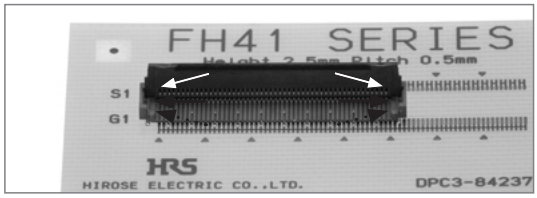



2.Precautions when mating /un-mating

❶ Avoid insertion in diagonal direction.
Do not insert the cable in diagonal direction.
A part of the connector may touches the contacts resulting in deformation of the contacts.

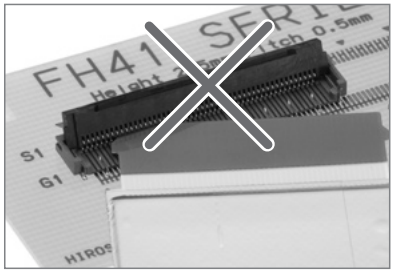

Insert the cable straight into the connector and hook the cable tabs with the guide.

After insertion, slightly pull the cables to make sure the cable tabs are firmly secured. No removal of the cable means correct insertion.

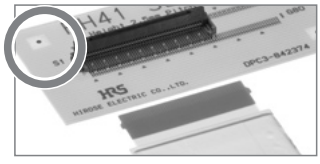

① Insert the cable straight and obliquely from above.

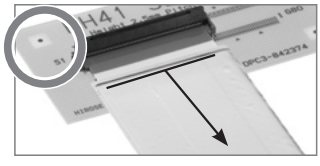

② Slightly pull the cable to make sure the tabs are firmly secured.

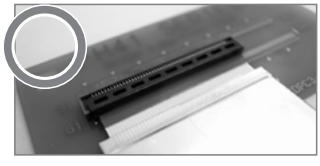

③ Close the actuator.

❷ Avoid “ride on”
Avoid insertion so the cables ride on any guide. Be sure NOT to close the actuator as the cables ride on any guide. It may cause conduction failure.

Ride on a left guide

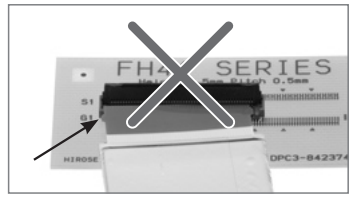

Ride on a right guide

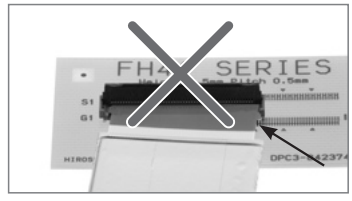

Correct insertion

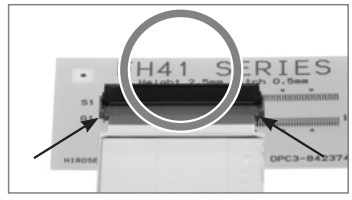

Do not close the actuator as the cables ride on.

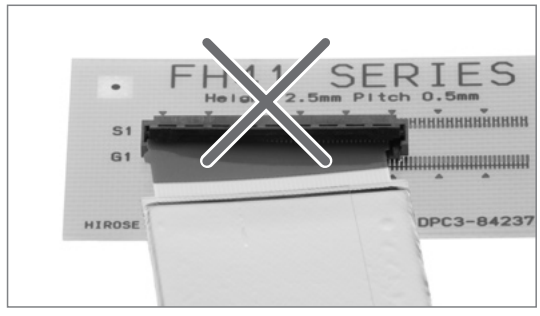

In the event it is locked as the cables ride on a guide, absolutely avoid moving the cable. In this case, open the actuator and re-insert the cable as instructed in “ 1.How to insert”

Do not move the cables back and forth and around as the cables ride on the guide when the actuator is closed.

