

Is Now Part of



ON Semiconductor®

To learn more about ON Semiconductor, please visit our website at
www.onsemi.com

Please note: As part of the Fairchild Semiconductor integration, some of the Fairchild orderable part numbers will need to change in order to meet ON Semiconductor's system requirements. Since the ON Semiconductor product management systems do not have the ability to manage part nomenclature that utilizes an underscore (_), the underscore (_) in the Fairchild part numbers will be changed to a dash (-). This document may contain device numbers with an underscore (_). Please check the ON Semiconductor website to verify the updated device numbers. The most current and up-to-date ordering information can be found at www.onsemi.com. Please email any questions regarding the system integration to Fairchild_questions@onsemi.com.

ON Semiconductor and the ON Semiconductor logo are trademarks of Semiconductor Components Industries, LLC dba ON Semiconductor or its subsidiaries in the United States and/or other countries. ON Semiconductor owns the rights to a number of patents, trademarks, copyrights, trade secrets, and other intellectual property. A listing of ON Semiconductor's product/patent coverage may be accessed at www.onsemi.com/site/pdf/Patent-Marking.pdf. ON Semiconductor reserves the right to make changes without further notice to any products herein. ON Semiconductor makes no warranty, representation or guarantee regarding the suitability of its products for any particular purpose, nor does ON Semiconductor assume any liability arising out of the application or use of any product or circuit, and specifically disclaims any and all liability, including without limitation special, consequential or incidental damages. Buyer is responsible for its products and applications using ON Semiconductor products, including compliance with all laws, regulations and safety requirements or standards, regardless of any support or applications information provided by ON Semiconductor. "Typical" parameters which may be provided in ON Semiconductor data sheets and/or specifications can and do vary in different applications and actual performance may vary over time. All operating parameters, including "Typicals" must be validated for each customer application by customer's technical experts. ON Semiconductor does not convey any license under its patent rights nor the rights of others. ON Semiconductor products are not designed, intended, or authorized for use as a critical component in life support systems or any FDA Class 3 medical devices or medical devices with a same or similar classification in a foreign jurisdiction or any devices intended for implantation in the human body. Should Buyer purchase or use ON Semiconductor products for any such unintended or unauthorized application, Buyer shall indemnify and hold ON Semiconductor and its officers, employees, subsidiaries, affiliates, and distributors harmless against all claims, costs, damages, and expenses, and reasonable attorney fees arising out of, directly or indirectly, any claim of personal injury or death associated with such unintended or unauthorized use, even if such claim alleges that ON Semiconductor was negligent regarding the design or manufacture of the part. ON Semiconductor is an Equal Opportunity/Affirmative Action Employer. This literature is subject to all applicable copyright laws and is not for resale in any manner.

FAIRCHILD SEMICONDUCTOR®

November 2013

FDMS037N08B

N-Channel PowerTrench® MOSFET

75 V, 100 A, 3.7 mΩ

Features

- $R_{DS(on)}$ = 3.01 mΩ (Typ.) @ V_{GS} = 10 V, I_D = 50 A
- Low FOM $R_{DS(on)}$*Q_G
- Low Reverse Recovery Charge, Q_{rr} = 80 nC
- Soft Reverse Recovery Body Diode
- Enables Highly Efficiency in Synchronous Rectification
- Fast Switching Speed
- 100% UIL Tested
- RoHS Compliant

Description

This N-Channel MOSFET is produced using Fairchild Semiconductor's advance PowerTrench® process that has been tailored to minimize the on-state resistance while maintaining superior switching performance.

Applications

- Synchronous Rectification for ATX / Server / Telecom PSU
- Battery Protection circuit
- DC Motor Drives and Uninterruptible Power Supplies

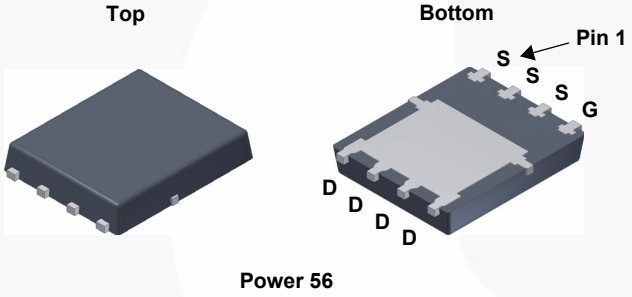

Power 56

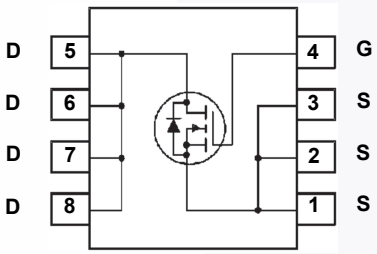

MOSFET Maximum Ratings T_A = 25°C unless otherwise noted.

Symbol	Parameter		FDMS037N08B	Unit
V_{DSS}	Drain to Source Voltage		75	V
V_{GSS}	Gate to Source Voltage		±20	V
I_D	Drain Current	- Continuous (T_C = 25°C)	100	A
		- Continuous (T_C = 25°C, Silicon Limited)	128	
		- Continuous (T_A = 25°C) (Note 1a)	19.9	
I_{DM}	Drain Current	- Pulsed (Note 2)	400	A
E_{AS}	Single Pulsed Avalanche Energy	(Note 3)	180.6	mJ
P_D	Power Dissipation	(T_C = 25°C)	104.2	W
		(T_A = 25°C) (Note 1a)	0.83	W
T_J, T_{STG}	Operating and Storage Temperature Range		-55 to +150	°C

Thermal Characteristics

Symbol	Parameter		FDMS037N08B	Unit
$R_{\theta JC}$	Thermal Resistance, Junction to Case, Max.		1.2	°C/W
$R_{\theta JA}$	Thermal Resistance, Junction to Ambient, Max.	(Note 1a)	50	

©2012 Fairchild Semiconductor Corporation

Package Marking and Ordering Information

Device Marking	Device	Package	Reel Size	Tape Width	Quantity
FDMS037N08B	FDMS037N08B	Power 56	13 ”	12 mm	3000 units

Electrical Characteristics T_J= 25°C unless otherwise noted.

Symbol	Parameter	Test Conditions	Min.	Typ.	Max.	Unit
Off Characteristics						
BV_{DSS}	Drain to Source Breakdown Voltage	I_D = 250 μA, V_{GS} = 0 V	75	-	-	V
ΔBV_{DSS} / ΔT_J	Breakdown Voltage Temperature Coefficient	I_D = 250 μA, Referenced to 25°C	-	39	-	mV/°C
I_{DSS}	Zero Gate Voltage Drain Current	V_{DS} = 60 V, V_{GS} = 0 V	-	-	1	μA
I_{GSS}	Gate to Body Leakage Current	V_{GS} = ±20 V, V_{DS} = 0 V	-	-	±100	nA
On Characteristics						
$V_{GS(th)}$	Gate Threshold Voltage	V_{GS} = V_{DS}, I_D = 250 μA	2.5	-	4.5	V
$R_{DS(on)}$	Static Drain to Source On Resistance	V_{GS} = 10 V, I_D = 50 A	-	3.01	3.7	mΩ
g_{FS}	Forward Transconductance	V_{DS} = 10 V, I_D = 50 A	-	108	-	S
Dynamic Characteristics						
C_{iss}	Input Capacitance	V_{DS} = 37.5 V, V_{GS} = 0 V, f = 1 MHz	-	4550	5915	pF
C_{oss}	Output Capacitance		-	1060	1380	pF
C_{rss}	Reverse Transfer Capacitance		-	30.2	45	pF
C_{oss}(er)	Energy Releted Output Capacitance	V_{DS} = 37.5 V, V_{GS} = 0 V	-	1702	-	pF
$Q_{g(tot)}$	Total Gate Charge at 10V	V_{DS} = 37.5 V, I_D = 50 A, V_{GS} = 0 V to 10 V	-	76.8	100	nC
Q_{gs}	Gate to Source Gate Charge		-	27.5	-	nC
Q_{gd}	Gate to Drain “Miller” Charge		-	17.4	-	nC
$V_{plateau}$	Gate Plateau Volatge	(Note 4)	-	5.1	-	V
Q_{sync}	Total Gate Charge Sync.	V_{DS} = 0 V, I_D = 50 A	-	66.3	-	nC
Q_{oss}	Output Charge	V_{DS} = 37.5 V, V_{GS} = 0 V	-	74.6	-	nC
ESR	Equivalent Series Resistance	f = 1 MHz	-	1.28	-	Ω
Switching Characteristics						
$t_{d(on)}$	Turn-On Delay Time	V_{DD} = 37.5 V, I_D = 50 A, V_{GS} = 10 V, R_G = 4.7 Ω	-	34.9	80	ns
t_r	Turn-On Rise Time		-	20.1	50	ns
$t_{d(off)}$	Turn-Off Delay Time		-	55.3	120	ns
t_f	Turn-Off Fall Time	(Note 4)	-	19.4	49	ns
Drain-Source Diode Characteristics						
I_S	Maximum Continuous Drain to Source Diode Forward Current		-	-	100	A
I_{SM}	Maximum Pulsed Drain to Source Diode Forward Current		-	-	400	A
V_{SD}	Drain to Source Diode Forward Voltage	V_{GS} = 0 V, I_{SD} = 50 A	-	-	1.3	V
t_{rr}	Reverse Recovery Time	V_{GS} = 0 V, I_{SD} = 50 A, dI_F/dt = 100 A/μs	-	66.8	-	ns
Q_{rr}	Reverse Recovery Charge		-	84	-	nC

Notes:

1.$R_{\theta JA}$ is determined with the device mounted on a 1in^2 pad 2 oz copper pad on a 1.5 x 1.5 in. board of FR-4 material. $R_{\theta JC}$ is guaranteed by design while $R_{\theta CA}$ is determined by the user's board design.

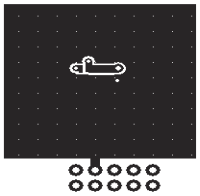

a. 50 °C/W when mounted on a 1 in^2 pad of 2 oz copper.

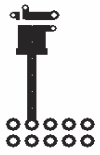

b. 125 °C/W when mounted on a minimum pad of 2 oz copper.

2. Repetitive rating: pulse-width limited by maximum junction temperature.

3. L = 0.3 mH, I_{AS} = 34.7 A, starting T_J = 25°C.

4. Essentially independent of operating temperature typical characteristics.

Typical Performance Characteristics

Figure 1. On-Region Characteristics

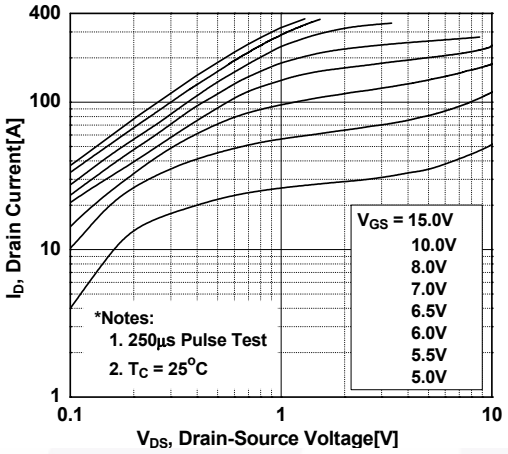

Figure 2. Transfer Characteristics

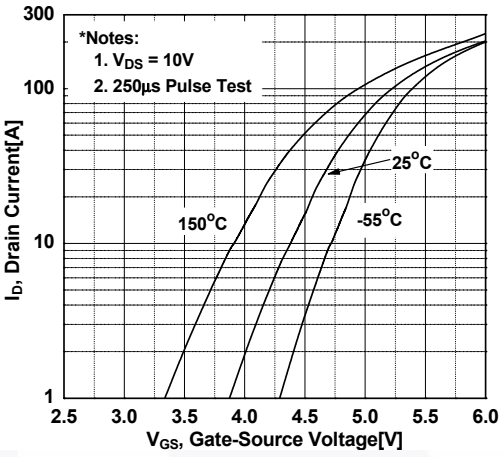

Figure 3. On-Resistance Variation vs. Drain Current and Gate Voltage

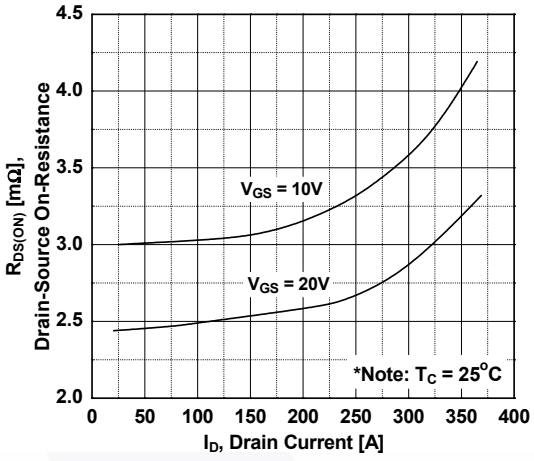

Figure 4. Body Diode Forward Voltage Variation vs. Source Current and Temperature

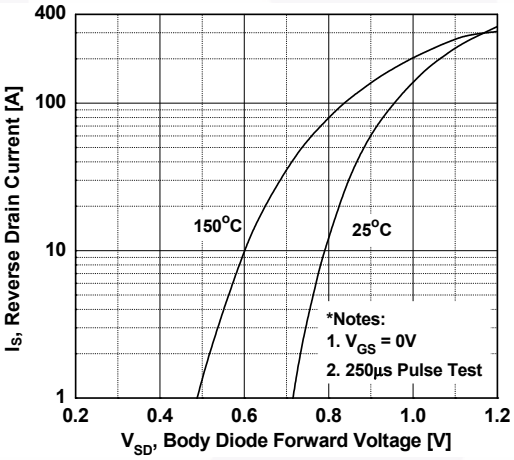

Figure 5. Capacitance Characteristics

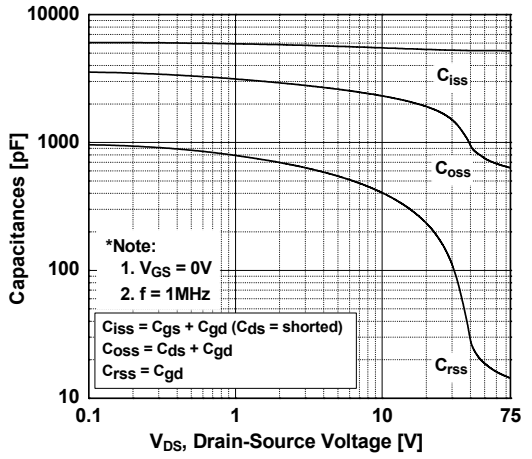

Figure 6. Gate Charge Characteristics

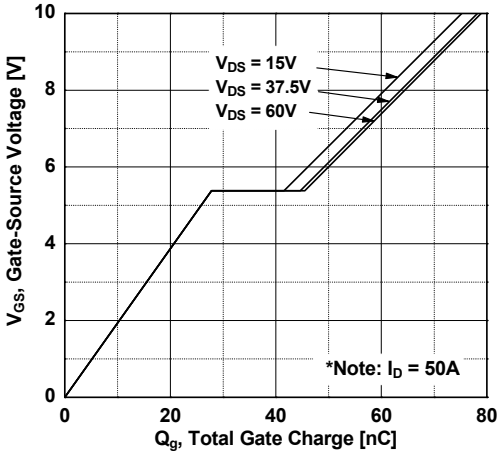

Typical Performance Characteristics (Continued)

Figure 7. Breakdown Voltage Variation vs. Temperature

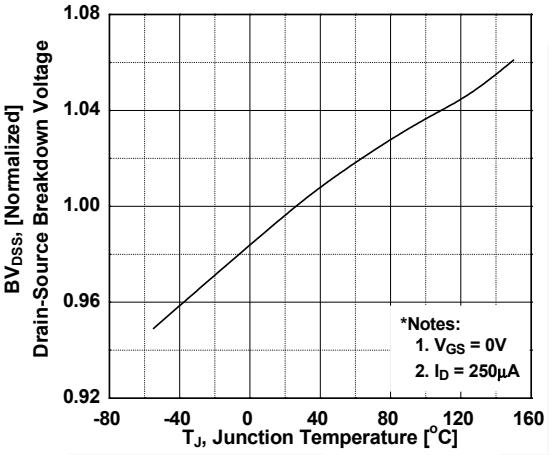

Figure 8. On-Resistance Variation vs. Temperature

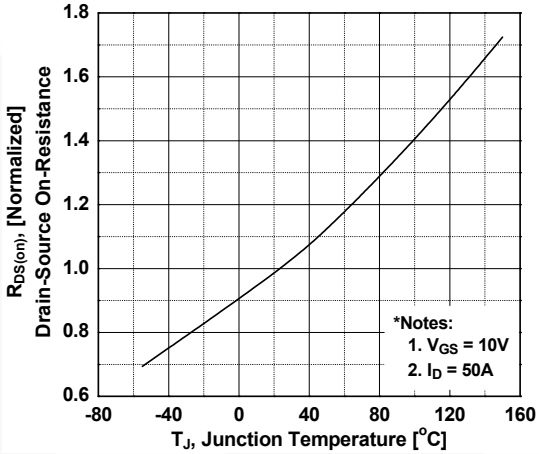

Figure 9. Maximum Safe Operating Area

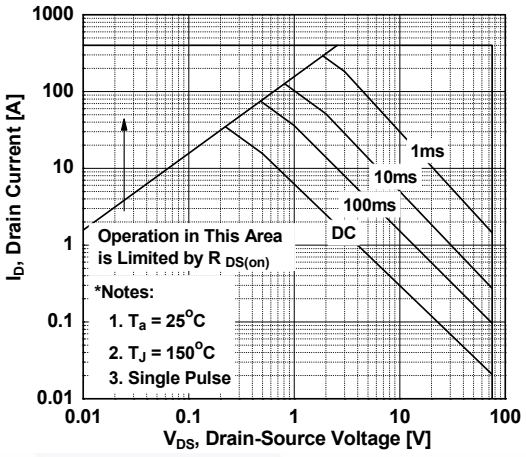

Figure 10. Maximum Drain Current vs. Case Temperature

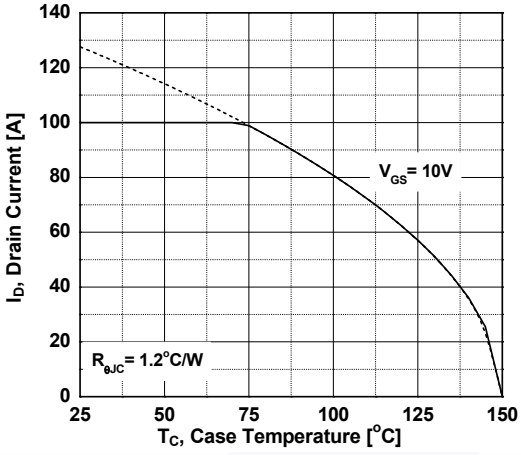

Figure 11. Eoss vs. Drain to Source Voltage

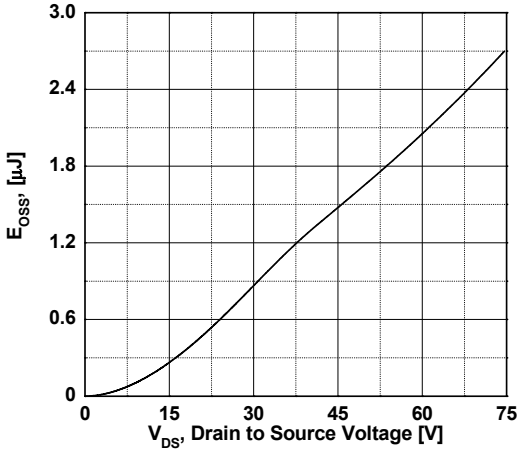

Figure 12. Unclamped Inductive Switching Capability

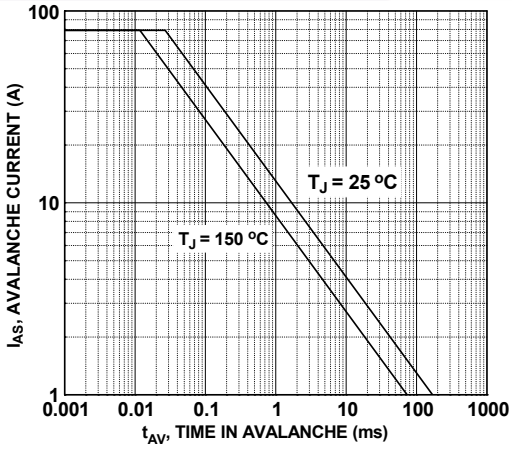

Typical Performance Characteristics (Continued)

Figure 13. Transient Thermal Response Curve

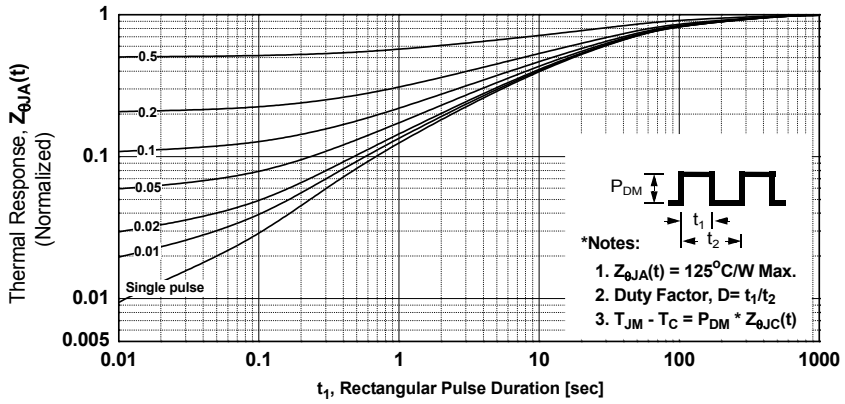

Figure 14. Gate Charge Test Circuit & Waveform

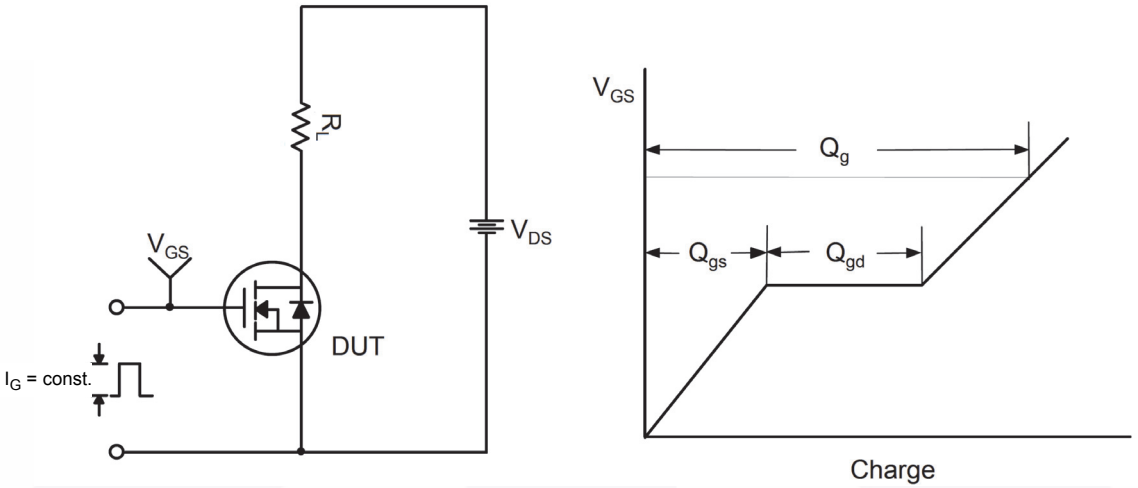

Figure 15. Resistive Switching Test Circuit & Waveforms

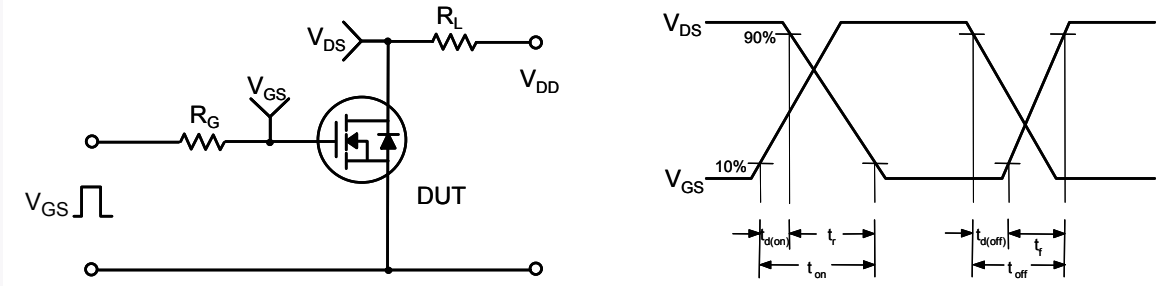

Figure 16. Unclamped Inductive Switching Test Circuit & Waveforms

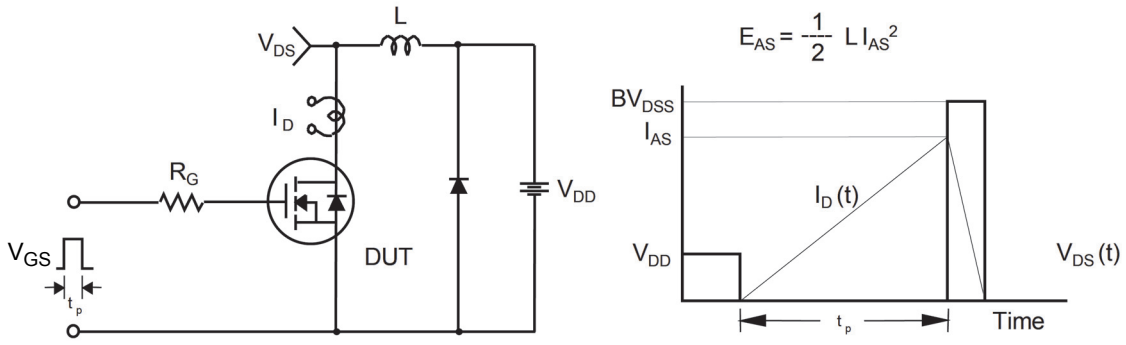

Figure 17. Peak Diode Recovery dv/dt Test Circuit & Waveforms

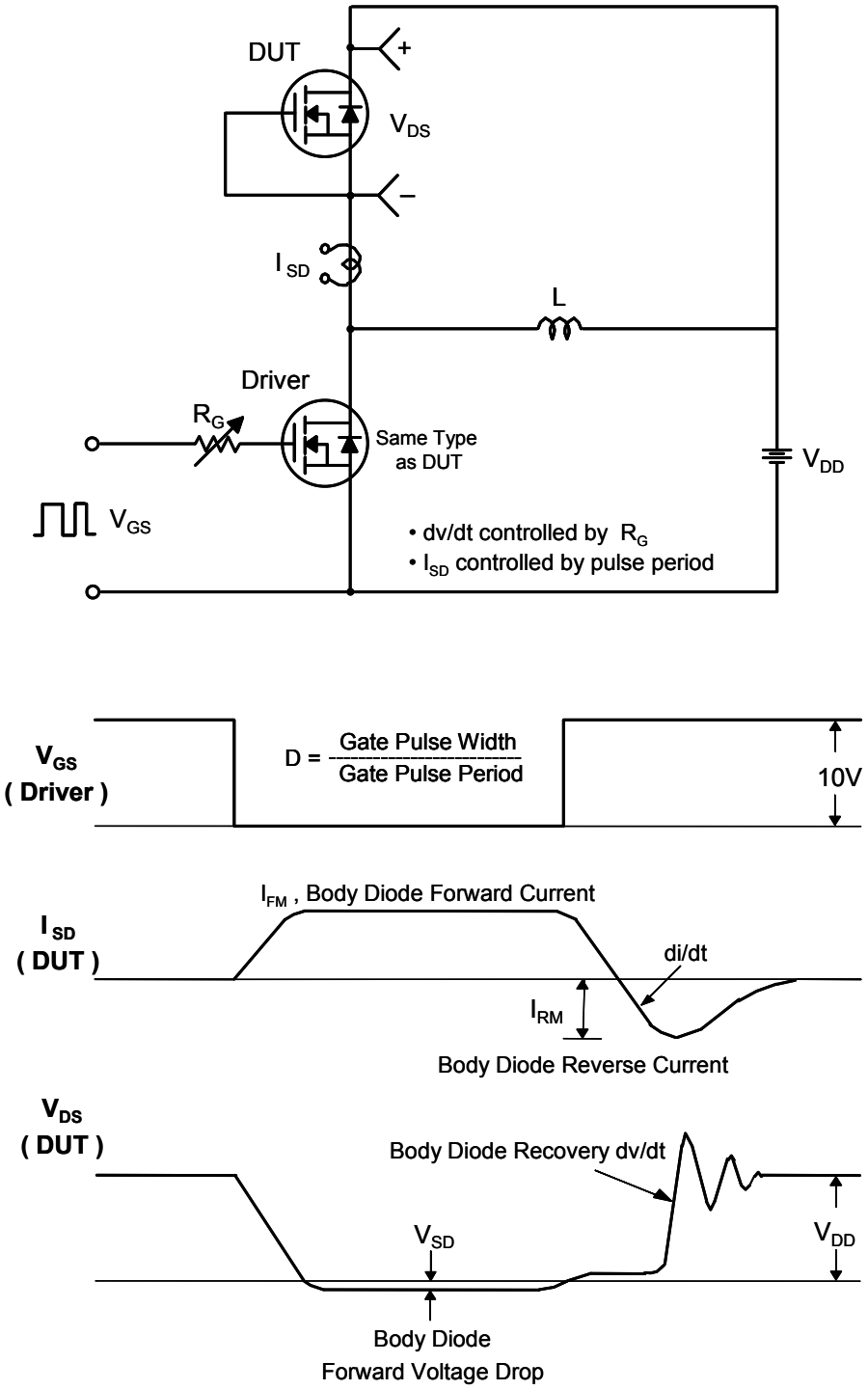

Figure 18. Total Gate Charge Qsync. Test Circuit & Waveforms

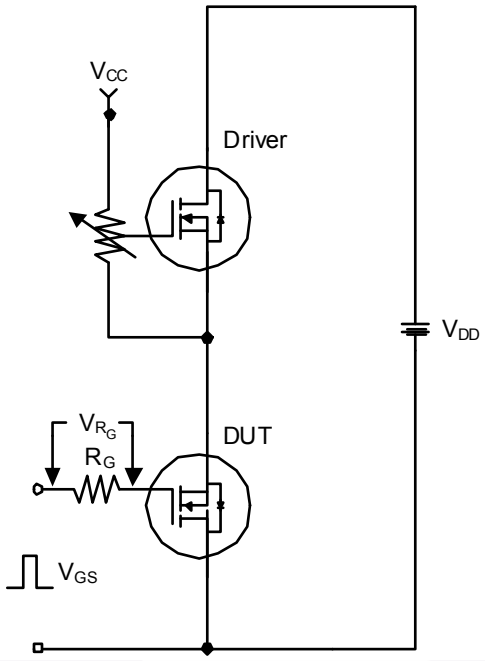

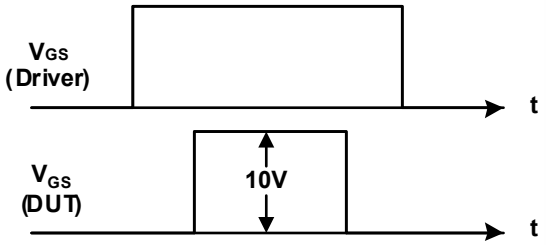

$$Qsync = \frac{1}{R_G} \cdot \int V_{R_G}(t)\ dt$$

PQFN8 5X6, 1.27P
CASE 483AE
ISSUE A

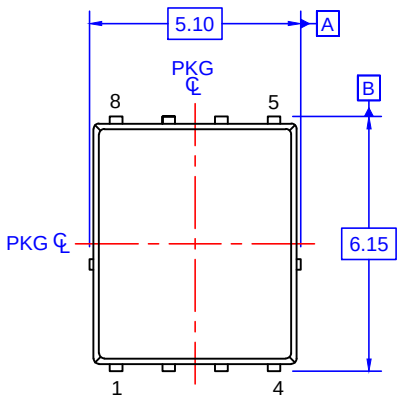

TOP VIEW

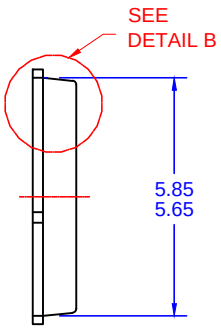

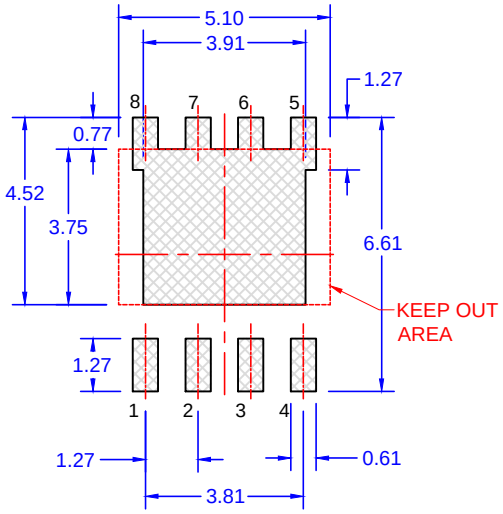

LAND PATTERN
RECOMMENDATION

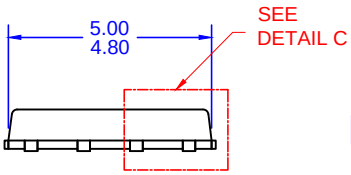

SIDE VIEW

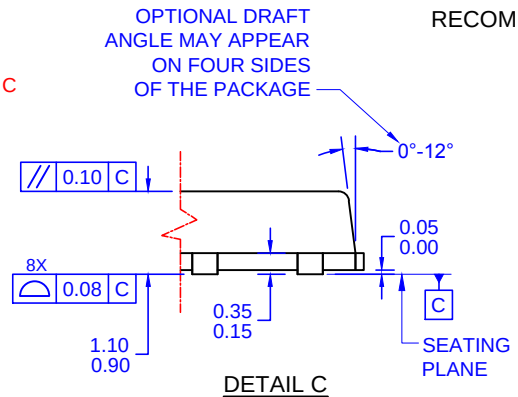

DETAIL C
SCALE: 2:1

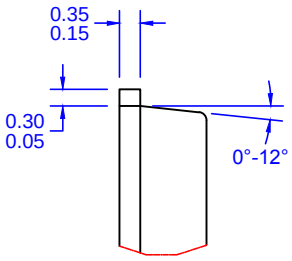

DETAIL B
SCALE: 2:1

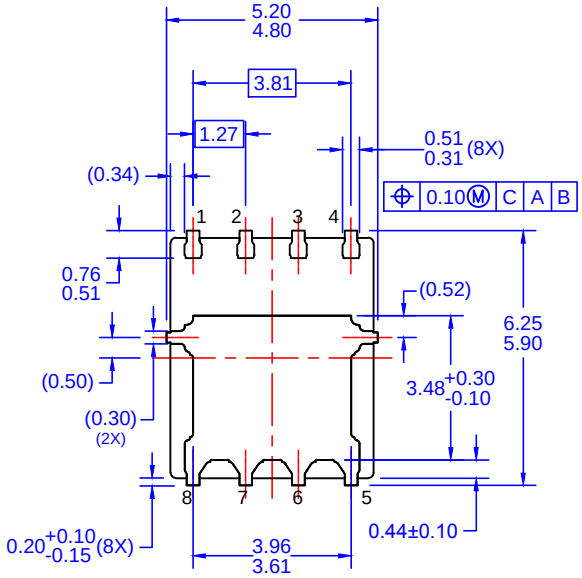

BOTTOM VIEW

NOTES: UNLESS OTHERWISE SPECIFIED

A. PACKAGE STANDARD REFERENCE: JEDEC MO-240, ISSUE A, VAR. AA,.
B. DIMENSIONS DO NOT INCLUDE BURRS OR MOLD FLASH. MOLD FLASH OR BURRS DOES NOT EXCEED 0.10MM.
C. ALL DIMENSIONS ARE IN MILLIMETERS.
D. DIMENSIONING AND TOLERANCING PER ASME Y14.5M-2009.
E. IT IS RECOMMENDED TO HAVE NO TRACES OR VIAS WITHIN THE KEEP OUT AREA.

ON Semiconductor

ON Semiconductor and ON are trademarks of Semiconductor Components Industries, LLC dba ON Semiconductor or its subsidiaries in the United States and/or other countries. ON Semiconductor owns the rights to a number of patents, trademarks, copyrights, trade secrets, and other intellectual property. A listing of ON Semiconductor's product/patent coverage may be accessed at www.onsemi.com/site/pdf/Patent−Marking.pdf. ON Semiconductor reserves the right to make changes without further notice to any products herein. ON Semiconductor makes no warranty, representation or guarantee regarding the suitability of its products for any particular purpose, nor does ON Semiconductor assume any liability arising out of the application or use of any product or circuit, and specifically disclaims any and all liability, including without limitation special, consequential or incidental damages. Buyer is responsible for its products and applications using ON Semiconductor products, including compliance with all laws, regulations and safety requirements or standards, regardless of any support or applications information provided by ON Semiconductor. "Typical" parameters which may be provided in ON Semiconductor data sheets and/or specifications can and do vary in different applications and actual performance may vary over time. All operating parameters, including "Typicals" must be validated for each customer application by customer's technical experts. ON Semiconductor does not convey any license under its patent rights nor the rights of others. ON Semiconductor products are not designed, intended, or authorized for use as a critical component in life support systems or any FDA Class 3 medical devices or medical devices with a same or similar classification in a foreign jurisdiction or any devices intended for implantation in the human body. Should Buyer purchase or use ON Semiconductor products for any such unintended or unauthorized application, Buyer shall indemnify and hold ON Semiconductor and its officers, employees, subsidiaries, affiliates, and distributors harmless against all claims, costs, damages, and expenses, and reasonable attorney fees arising out of, directly or indirectly, any claim of personal injury or death associated with such unintended or unauthorized use, even if such claim alleges that ON Semiconductor was negligent regarding the design or manufacture of the part. ON Semiconductor is an Equal Opportunity/Affirmative Action Employer. This literature is subject to all applicable copyright laws and is not for resale in any manner.

PUBLICATION ORDERING INFORMATION

LITERATURE FULFILLMENT:
Literature Distribution Center for ON Semiconductor
19521 E. 32nd Pkwy, Aurora, Colorado 80011 USA
Phone: 303−675−2175 or 800−344−3860 Toll Free USA/Canada
Fax: 303−675−2176 or 800−344−3867 Toll Free USA/Canada
Email: orderlit@onsemi.com

N. American Technical Support: 800−282−9855 Toll Free USA/Canada
Europe, Middle East and Africa Technical Support:
Phone: 421 33 790 2910
Japan Customer Focus Center
Phone: 81−3−5817−1050

ON Semiconductor Website: **www.onsemi.com**

Order Literature: http://www.onsemi.com/orderlit

For additional information, please contact your local Sales Representative