■Features

Differential pressure, Surface mount package

■Ordering Information

FDM－07P D SR

- FDM: Model
- 07P: Rated Pressure (PSI)
- D: Pressure type — D : Differential pressure
- SR: Terminal leads configuration — Surface mount package



Weight (grams)
1.2

RoHS compliance

Measurable pressure range(kPa)	Part number
-13.79 to 13.79	FDM-02PDSR
-34.47 to 34.47	FDM-05PDSR
-48.26 to 48.26	FDM-07PDSR
-103.4 to 103.4	FDM-15PDSR
-206.8 to 206.8	FDM-30PDSR
-344.7 to 344.7	FDM-50PDSR
-482.6 to 482.6	FDM-70PDSR
-827.4 to 827.4	FDM-120PDSR

■Specifications

Model		02PD	05PD	07PD	15PD	30PD	50PD	70PD	120PD	Unit
Recommended operating conditions										
Pressure type		Differential pressure								-
Rated pressure		13.79	34.47	48.26	103.4	206.8	344.7	482.6	827.4	kPa
Measurable pressure range		-13.79 to 13.79	-34.47 to 34.47	-48.26 to 48.26	-103.4 to 103.4	-206.8 to 206.8	-344.7 to 344.7	-482.6 to 482.6	-827.4 to 827.4	kPa
Temperature range		0 to 50								deg.C
Pressure media		Non-corrosive gases only (No liquid)								-
Excitation current (Constant)		1.5								mADC
Absolute maximum rating										
Maximum differential pressure **1		Twice of rated pressure							1.5 times of rating pressure	-
Port1 Maximum load pressure										
Port2 Maximum load pressure										
Maximum excitation current		3.0								mADC
Operating temperature		-20 to 100								deg.C
Storage temperature		-40 to 120								deg.C
Operating humidity		30 to 80 (Non dew condition)								%RH
Electric characteristics (Drive Current 1.5mA constant ,ambient temperature Ta=25deg.C)										
Output span voltage **2		60 to 140 (at 0kPa to rated pressure)								mV
Offset voltage **2		+/-20 (at 0kPa)								mV
Bridge resistance		4000 to 6000								Ω
Response time		2 (for the reference)								msec.
Accuracy	TSO*	+/-5								%FS/0-50deg.C
	TCS*	2.5								
	Linearity	+/-0.5	+/-0.3					+/-0.5	+/-0.6	%FS
	Pressure hysteresis	+/-0.4	+/-0.2					+/-0.4		%FS

*TSO : Temperature sensitivity of offset voltage(Temperature range from 0-50 deg.C)
*TCS : Temperature coefficient of output span voltage(Temperature range from 0-50 deg.C)
**1 Port1 pressure > Port2 pressure , Port2 pressure : reference pressure
**2 Output refers to pressure at pressure port2.

Fujikura

Pressure(kPa) =Port1 pressure - Port2 pressure

P1= 0 kPa T1= 0 deg.C
P2= 1/2 x P3 (kPa) T2= 25 deg.C
P3= reted pressure (kPa) T3= 50 deg.C

Offset voltage (mV)
Voff = V(P1,T)
Voff(0) = V(P1,T1)
Voff(25) = V(P1,T2)
Voff(50) = V(P1,T3)

Output voltage at full scale (mV)
Vfs = V(P3,T)
Vfs(0) = V(P3,T1)
Vfs(25) = V(P3,T2)
Vfs(50) = V(P3,T3)

Output span voltage (mV)
SV = Vfs - Voff
SV(0) = Vfs(0) - Voff(0)
SV(25) = Vfs(25) - Voff(25)
SV(50) = Vfs(50) - Voff(50)

Temperature sensitivity of offset voltage (%FS)
TSO = {LARGER ONE} / SV(25) x 100
LARGER ONE = larger absolute value which of {Voff(0) - Voff(25)} and {Voff(50) - Voff(25)}

Temperature coefficient of output span voltage (%FS)
TCS = {max[SV(0),SV(25),SV(50)] - min[SV(0),SV(25),SV(50)] } / SV(25) x 100

Linearity (%FS)
NL = {V(P2,T2) - [Voff(25)+Vfs(25)]/2 } / SV(25) x 100

Pressure hysteresis (%FS)
Phys = {Voff'(25) - Voff(25) } / SV(25) x 100
Voff'(25) : Output voltage against P1 after stressing by P3 pressure.

■Outline dimensions■

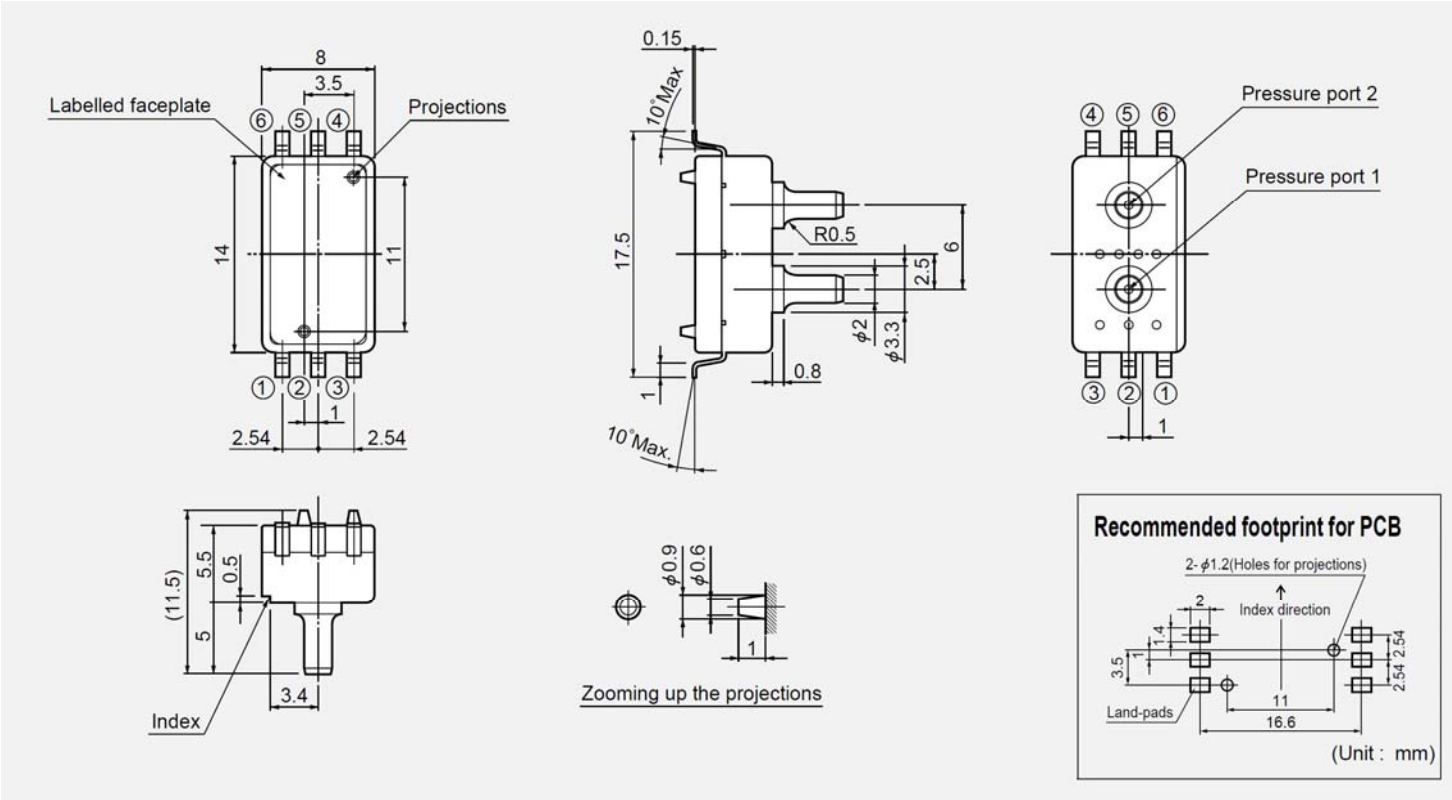

■Connection diagram■

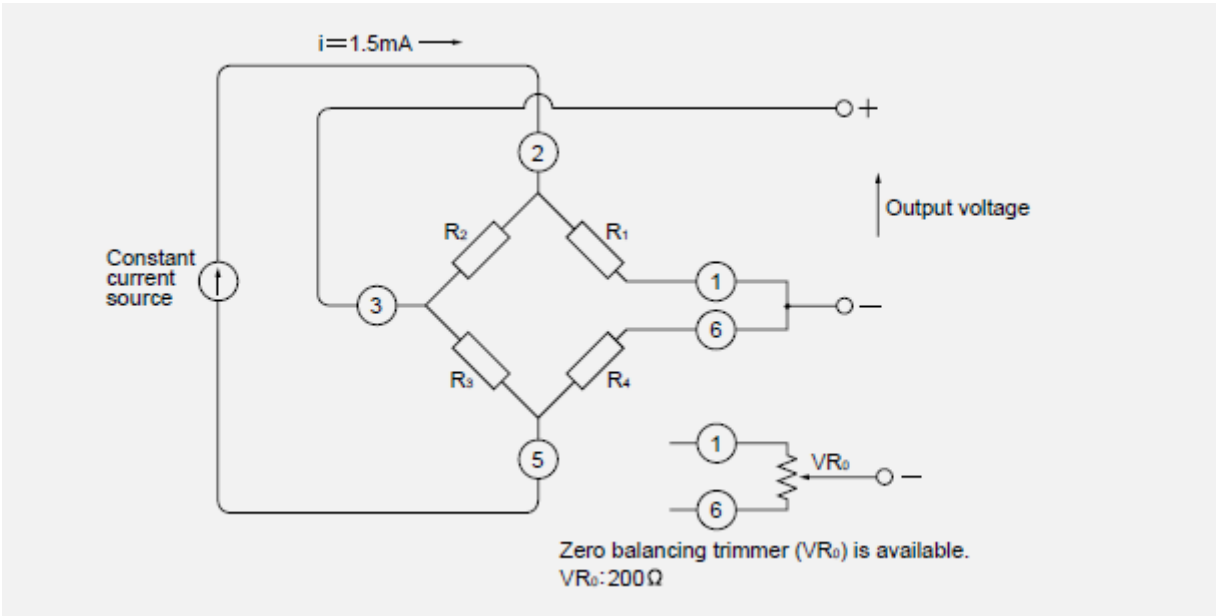

■**Output characteristics**■

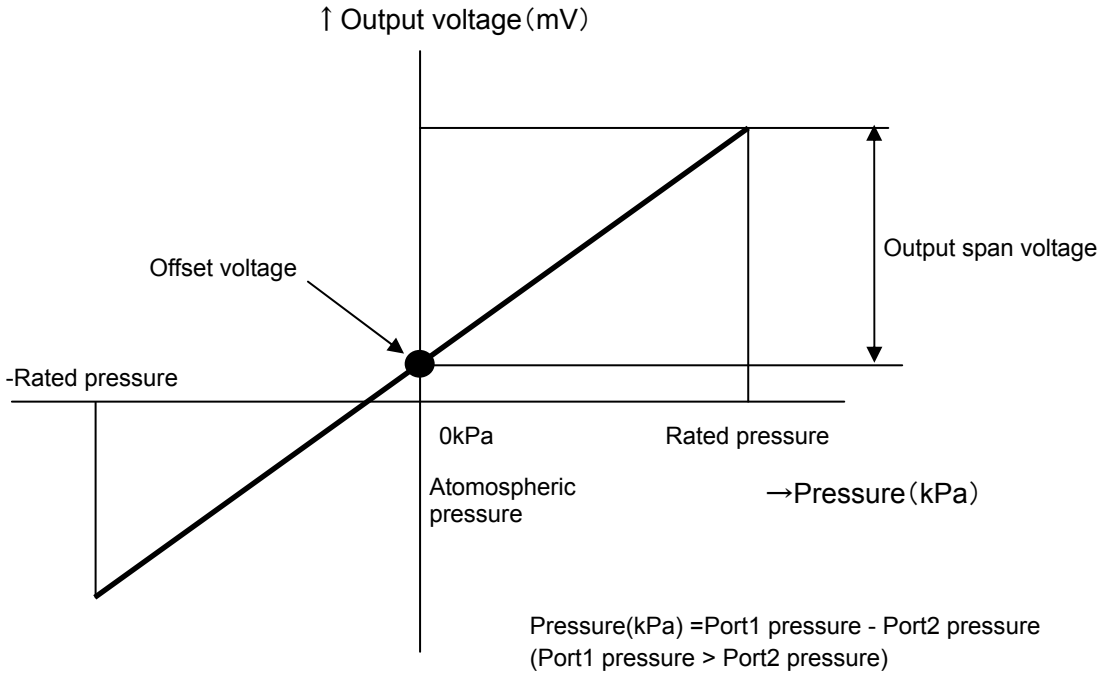

Pressure(kPa) =Port1 pressure - Port2 pressure
(Port1 pressure > Port2 pressure)
Output refers to pressure at pressure port2.

Note ; Please read instruction “Notes” before using the sensor.
Fujikura reserves the right to change specifications without notice.

Please set Zero-calibration function up your products. The offset voltage may be shifted some mechanical stress such as mounting, installation and etc. over longtime using.

Reflow Soldering process recommendation profile

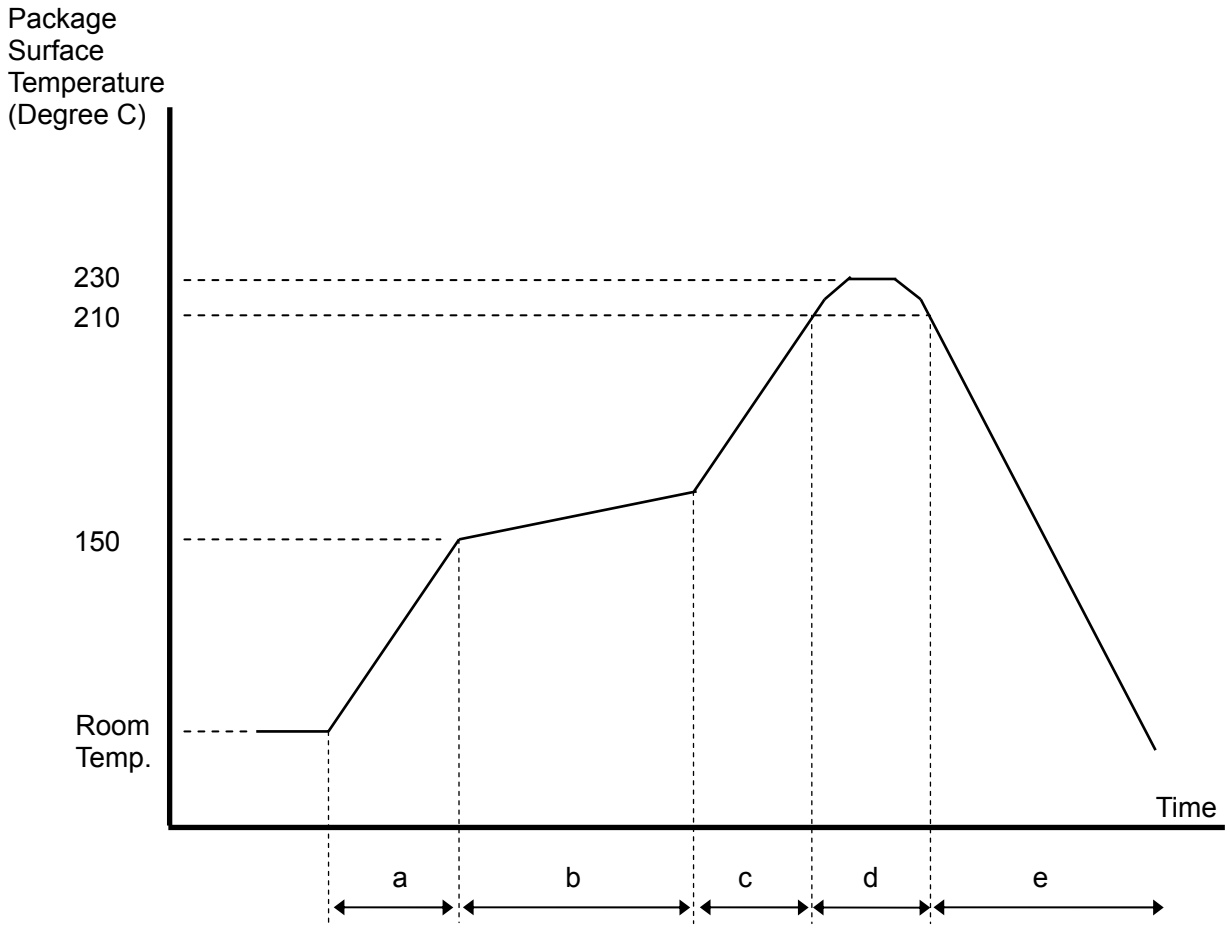

a: Rump up rate 1 or 2 deg.C/sec.
b: Pre-heating 150 to 180 deg.C,within 60 to120sec.
c: Rump up rate 1 to 2 deg.C/sec.
d: Heating max.230 deg.C,max.10sec. 210 deg.C,within 30sec.
e: Rump down rate 1 or 2 deg.C/sec.

Note ; 1) Temperature means Surface temperature of the sensor package.
2) Reflow process max. 2 times.
3) Do not wash the sensor.
4) Do not put the solder and flux on the sensor package.

If you have any questions regarding technical issues or specifications, please contact us.
Fujikura Ltd. Sensor Department 5-1 Kiba 1-chome, Koto-ku, Tokyo 135-8512, Japan
Phone +81-(0)3-5606-1072
E-mail : sensor@fujikura.co.jp