FDD25 SERIES



DC - DC CONVERTER
20 ~ 30W SINGLE & DUAL OUTPUT

FEATURES

- LOW COST
- 2:1 WIDE INPUT RANGE
- I/O ISOLATION
- INPUT Pi FILTER
- SHORT CIRCUIT PROTECTION
- HIGH PERFORMANCE
- 2 YEARS WARRANTY

MODEL LIST

MODEL NO.	INPUT VOLTAGE	OUTPUT WATTAGE	OUTPUT VOLTAGE	OUTPUT CURRENT	EFF. (typ.)	EFF. (min.)
Single Output Models						
FDD25 - 03S1	9~18 VDC	20 WATTS	+3.3 VDC	6000 mA	80%	77%
FDD25 - 05S1	9~18 VDC	25 WATTS	+ 5 VDC	5000 mA	83%	81%
FDD25 - 12S1	9~18 VDC	25 WATTS	+ 12 VDC	2100 mA	86%	84%
FDD25 - 15S1	9~18 VDC	25 WATTS	+ 15 VDC	1700 mA	87%	85%
FDD25 - 03S2	18~36 VDC	20 WATTS	+3.3 VDC	6000 mA	80%	78%
FDD25 - 05S2	18~36 VDC	25 WATTS	+ 5 VDC	5000 mA	85%	83%
FDD25 - 12S2	18~36 VDC	30 WATTS	+ 12 VDC	2500 mA	86%	84%
FDD25 - 15S2	18~36 VDC	30 WATTS	+ 15 VDC	2000 mA	88%	86%
FDD25 - 03S3	36~72 VDC	20 WATTS	+3.3 VDC	6000 mA	80%	78%
FDD25 - 05S3	36~72 VDC	25 WATTS	+ 5 VDC	5000 mA	85%	83%
FDD25 - 12S3	36~72 VDC	30 WATTS	+ 12 VDC	2500 mA	87%	85%
FDD25 - 15S3	36~72 VDC	30 WATTS	+ 15 VDC	2000 mA	88%	86%
Dual Output Models						
FDD25 - 12D1	9~18 VDC	25 WATTS	± 12 VDC	± 1050 mA	85%	83%
FDD25 - 15D1	9~18 VDC	25 WATTS	± 15 VDC	± 850 mA	87%	85%
FDD25 - 12D2	18~36 VDC	30 WATTS	± 12 VDC	± 1250 mA	87%	85%
FDD25 - 15D2	18~36 VDC	30 WATTS	± 15 VDC	± 1000 mA	88%	86%
FDD25 - 12D3	36~72 VDC	30 WATTS	± 12 VDC	± 1250 mA	87%	85%
FDD25 - 15D3	36~72 VDC	30 WATTS	± 15 VDC	± 1000 mA	89%	87%

CIRCUIT SCHEMATIC

・Block diagram for FDD25 series with single output

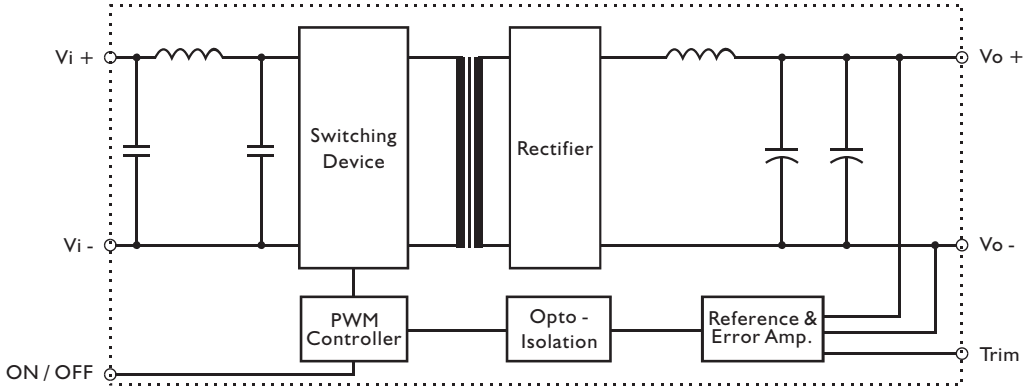

・Block diagram for FDD25 series with dual output

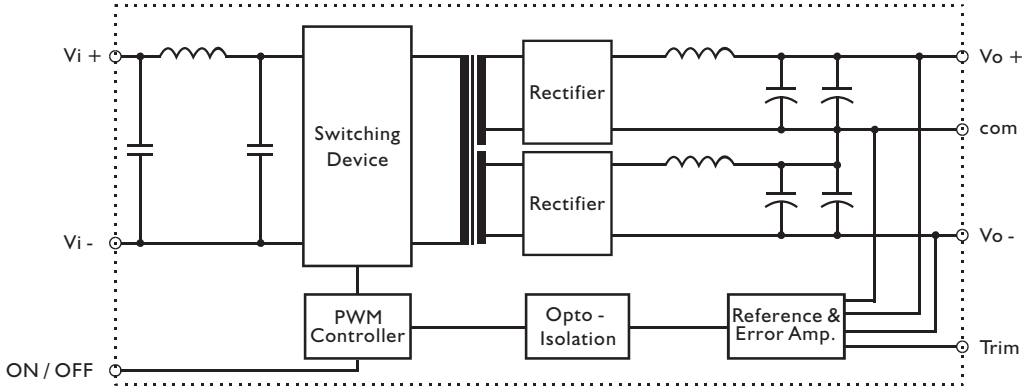

SPECIFICATION

All Specifications Typical At Nominal Line, Full Load, 25°C Unless Otherwise Noticed

GENERAL

Characteristics	Conditions	min.	typ.	max.	unit
Switching frequency	Vi nom, Io nom		180		KHz
Isolation voltage	Input / Output	1,500			VDC
Isolation resistance	Input / Output, @ 500VDC	100			MΩ
Ambient temperature	Operating at Vi nom, Io nom	-25		+ 71	°C
Case temperature	Operating at Vi nom, Io nom			+ 100	°C
Derating	Vi nom	See derating curve			% / °C
Storage temperature	Non operational	-40		+ 100	°C
Dimension	L50.8 x W50.8 x H11.9				mm
Cooling	Free air convection				
Case material	Metal				

INPUT SPECIFICATIONS

Characteristics	Conditions		min.	typ.	max.	unit
Input voltage range	Ta min ... Ta max, Io nom		9	12	18	VDC
			18	24	36	VDC
			36	48	72	VDC
No load input current	Vi = nom Io = 0	12V models			20	mA
		24V models			15	mA
		48V models			10	mA
Input voltage w/o damage	Io nom	12V models			20	VDC
		24V models			40	VDC
		48V models			75	VDC
Startup voltage	Io nom	12V models			8.5	VDC
		24V models			15	VDC
		48V models			35	VDC
Input filter	Pi type					

OUTPUT SPECIFICATIONS

Characteristics	Conditions		min.	typ.	max.	unit
Output voltage accuracy	Vi nom, Io nom				± 2	%
Minimum load	Vi nom	single output models	0			%
		dual output models (each output)	10			%
Line regulation	Io nom, Vi min ...Vi max				± 1	%
Load regulation	Vi nom, Io 0 ...Io nom, single output models				± 2	%
	Vi nom, Io min ...Io nom, dual output models				± 5	%
Transient recovery time	Vi nom, Io nom ... 1/2 Io nom			500		μS
Temperature coefficient	Vi nom, Io nom				± 0.02	% / °C
Ripple & noise	Vi nom, Io nom, BW = 20MHz	3.3V & 5V models			100	mV
		12V, 15V & dual			150	mV
Voltage trim range	Vi nom, Io nom	3.3V output models		± 5		%
		5V, 12V, 15V & dual		± 10		%
Efficiency	Vi nom, Io nom, Po / Pi		Up to 89%, See model list			

SPECIFICATION

All Specifications Typical At Nominal Line, Full Load, 25°C Unless Otherwise Noticed

CONTROL AND PROTECTION

Remote ON / OFF	ON: opened or 5 ~ 10VDC applied, reference to input GND
	OFF: -0.3 ~ 2VDC applied, reference to input GND
Input reversed	Shunt diode built in, external fuse recommended
Output short circuit	Continuous

MECHANISM & PIN CONFIGURATION

mm [inch]

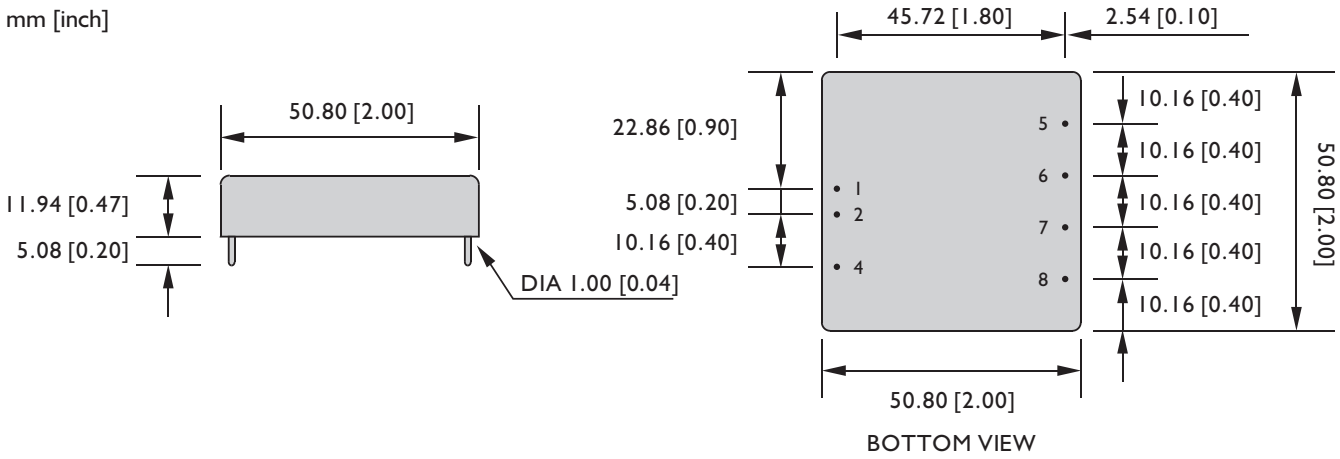

PHYSICAL CHARACTERISTICS

CASE SIZE	50.8 x 50.8 x 11.9 mm 2 x 2 x 0.47 inches
CASE MATERIAL	Metal
WEIGHT	70 g

PIN ASSIGNMENT

GENERAL

PIN NO.	1	2	4	5	6	7	8
SINGLE	Vi+	Vi -	S. D.	NO PIN	Vo +	Vo -	Trim
DUAL	Vi+	Vi -	S. D.	Vo +	com	Vo -	Trim

S.D. : REMOTE ON / OFF

DERATING

