FDD01 SERIES



DC - DC CONVERTER
1W SINGLE & DUAL OUTPUT

FEATURES

- EFFICIENCY UP TO 60%
- INPUT 5 V±10%
- DIP24 PACKAGE
- I / O ISOLATION
- SHORT CIRCUIT PROTECTION
- HIGH PERFORMANCE
- 3 YEARS WARRANTY

MODEL LIST

MODEL NO.	INPUT VOLTAGE	INPUT CURRENT (typ.)	OUTPUT WATTAGE	OUTPUT VOLTAGE	OUTPUT CURRENT	EFF. (min.)	EFF. (typ.)	CAPACITOR LOAD (max.)
Single Output Models								
FDD01 - 05S0	4.5~5.5 VDC	315 mA	1 WATTS	+ 5 VDC	200 mA	53%	55%	1000μF
FDD01 - 12S0	4.5~5.5 VDC	310 mA	1 WATTS	+ 12 VDC	84 mA	58%	60%	470μF
FDD01 - 15S0	4.5~5.5 VDC	300 mA	1 WATTS	+ 15 VDC	66 mA	58%	60%	330μF
Dual Output Models								
FDD01 - 05D0	4.5~5.5 VDC	315 mA	1 WATTS	± 5 VDC	± 100 mA	53%	55%	± 680μF
FDD01 - 12D0	4.5~5.5 VDC	310 mA	1 WATTS	± 12 VDC	± 42 mA	58%	60%	± 150μF
FDD01 - 15D0	4.5~5.5 VDC	300 mA	1 WATTS	± 15 VDC	± 33 mA	58%	60%	± 68μF

SPECIFICATION

All Specifications Typical At Nominal Line, Full Load, 25°C Unless Otherwise Noticed

GENERAL

Characteristics	Conditions	min.	typ.	max.	unit
Switching frequency	Vi nom, Io nom	50			KHz
Isolation voltage	Input - Output	1,500			VDC
Isolation resistance	Input - Output, @ 500VDC	100			MΩ
Ambient temperature	Operating at Vi nom, Io nom	-25		+ 71	°C
Case temperature	Operating at Vi nom, Io nom			+ 90	°C
Derating	Vi nom	See derating curve			
Storage temperature	Non operational	-40		+100	°C
Relative humidity	Vi nom, Io nom	20		95	% RH
Temperature coefficient	Vi nom, Io min			± 0.02	% / °C
Dimension		L31.8 x W20.3 x H12.7			mm
MTBF	Bellcore issue 6@40°C, GB		2,050,000		Hours
Cooling	Free air convection				

INPUT SPECIFICATIONS

Characteristics	Conditions	min.	typ.	max.	unit
Input voltage range	Ta min ... Ta max, Io nom	4.5	5	5.5	VDC
No load input current	Vi nom, Io = 0			65	mA
Input voltage w/o damage	Io nom			7	VDC
Startup voltage	Io nom		4		VDC

OUTPUT SPECIFICATIONS

Characteristics	Conditions		min.	typ.	max.	unit
Output voltage accuracy	Vi nom, Io nom				± 2	%
Minimum load	Vi nom	single output models	0			%
		dual output models (each output)	20			%
Line regulation	Io nom, Vi min ...Vi max				± 1	%
Load regulation	Vi nom, Io 0 ...Io nom, single output models				± 2	%
	Vi nom, Io min ...Io nom, dual output models				± 3	%
Cross regulation (Dual model)	Aymmetrical load 20% - 100% FL				± 5	%
Startup time	Vi nom, Io nom				50	ms
Transient recovery time	Vi nom, 1~0.5 Io nom				3	ms
Ripple & noise	Vi nom, Io nom, BW = 20MHz				100	mV
Efficiency	Vi nom, Io nom, Po / Pi		Up to 60%, See model list and efficiency curve			

CONTROL AND PROTECTION

Input reversed	External shunt diode, external fuse recommended 0.5A
Output short circuit	Current limited (Auto-recovery)

PHYSICAL CHARACTERISTICS

Case size	31.8 x 20.3 x 12.7 mm (1.25 x 0.8 x 0.5 inches)
Case material	Plastic
Weight	15 g
Potting material	Epoxy

MECHANISM & PIN CONFIGURATION

mm [inch]

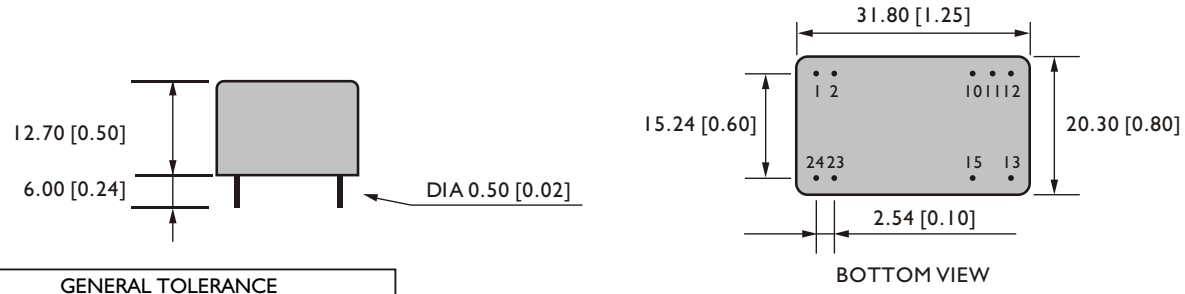

GENERAL TOLERANCE	
0.00[0.00] - 30.00[1.18]	±0.30[0.01]
30.00[1.18] - 120.00[4.72]	±0.50[0.02]

PIN ASSIGNMENT

GENERAL							
PIN NO.	1 & 2	10	11	12	13	15	23 & 24
SINGLE	Vi +	NO PIN	NO PIN	Vo -	Vo+	NO PIN	Vi -
DUAL	Vi +	com	com	NO PIN	Vo -	Vo+	Vi -

CIRCUIT SCHEMATIC

• Block diagram for FDD01 series with single output

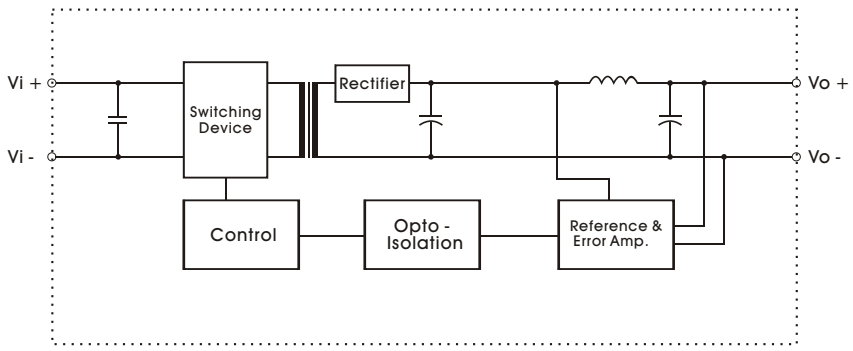

• Block diagram for FDD01 series with dual output

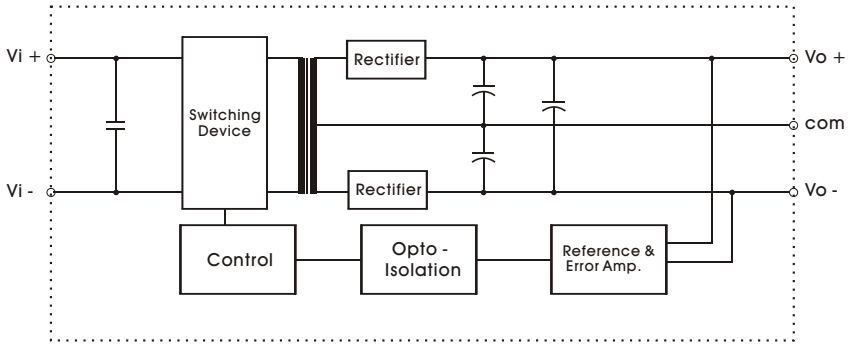

RECOMMENDED CIRCUIT

• Recommended filter for EN55022 Class B compliance

SINGLE OUTPUT MODELS

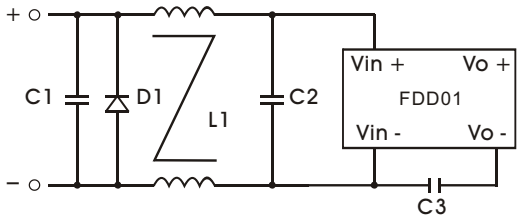

DUAL OUTPUT MODELS

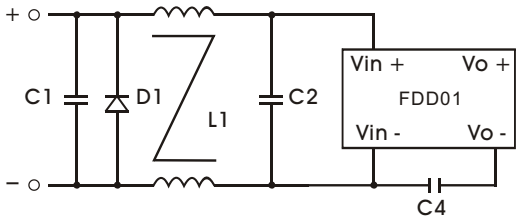

Note:D1 - Reverse Diode (1A/100V)

• The components used in the above figure, together with the manufacturer part numbers for these components, are as follows.

	C1	C2	C3	C4	L1
FDD01-XXS0	3.3μF/16V MLCC	4.7μF/16V MLCC	1nF/2KV MLCC		3mH Common Choke
FDD01-XXD0	3.3μF/16V MLCC	4.7μF/16V MLCC		1nF/2KV MLCC	3mH Common Choke

• Recommended EN 55022 Class B filter circuit layout.

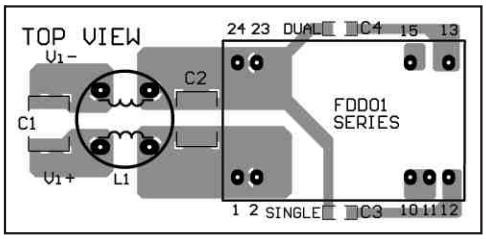

DERATING AND EFFICIENCY CURVE

