FAIRCHILD SEMICONDUCTOR®

November 2007

UniFET™

FDB12N50F

N-Channel MOSFET, FRFET

500V, 11.5A, 0.7Ω

Features

- $R_{DS(on)}$ = 0.59Ω (Typ.)@ V_{GS} = 10V, I_D = 6A
- Low gate charge (Typ. 21nC)
- Low C_{rss} (Typ. 11pF)
- Fast switching
- 100% avalanche tested
- Improve dv/dt capability
- RoHS compliant

Description

These N-Channel enhancement mode power field effect transistors are produced using Fairchild's proprietary, planar stripe, DMOS technology.

This advance technology has been especially tailored to minimize on-state resistance, provide superior switching performance, and withstand high energy pulse in the avalanche and commutation mode. These devices are well suited for high efficient switching mode power supplies and active power factor correction.

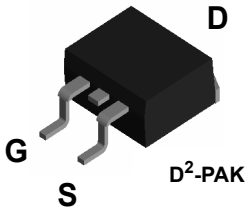

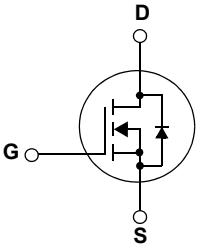

MOSFET Maximum Ratings T_C = 25°C unless otherwise noted

Symbol	Parameter		Ratings	Units
V_{DSS}	Drain to Source Voltage		500	V
V_{GSS}	Gate to Source Voltage		±30	V
I_D	Drain Current	-Continuous (T_C = 25°C)	11.5	A
		-Continuous (T_C = 100°C)	6.9	
I_{DM}	Drain Current	- Pulsed (Note 1)	46	A
E_{AS}	Single Pulsed Avalanche Energy	(Note 2)	456	mJ
I_{AR}	Avalanche Current	(Note 1)	11.5	A
E_{AR}	Repetitive Avalanche Energy	(Note 1)	16.5	mJ
dv/dt	Peak Diode Recovery dv/dt	(Note 3)	4.5	V/ns
P_D	Power Dissipation	(T_C = 25°C)	165	W
		- Derate above 25°C	1.33	W/°C
T_J, T_{STG}	Operating and Storage Temperature Range		-55 to +150	°C
T_L	Maximum Lead Temperature for Soldering Purpose, 1/8" from Case for 5 Seconds		300	°C

*Drain current limited by maximum junction temperature

Thermal Characteristics

Symbol	Parameter	Ratings	Units
$R_{\theta JC}$	Thermal Resistance, Junction to Case	0.75	°C/W
$R_{\theta JA}$	Thermal Resistance, Junction to Ambient	62.5	

©2007 Fairchild Semiconductor Corporation

Package Marking and Ordering Information $T_C = 25^oC$ unless otherwise noted

Device Marking	Device	Package	Reel Size	Tape Width	Quantity
FDB12N50F	FDB12N50FTM_WS	D2-PAK	330mm	24mm	800

Electrical Characteristics

Symbol	Parameter	Test Conditions	Min.	Typ.	Max.	Units
Off Characteristics						
BV_{DSS}	Drain to Source Breakdown Voltage	I_D = 250μA, V_{GS} = 0V, T_J = 25°C	500	-	-	V
ΔBV_{DSS} / ΔT_J	Breakdown Voltage Temperature Coefficient	I_D = 250μA, Referenced to 25°C	-	0.5	-	V/°C
I_{DSS}	Zero Gate Voltage Drain Current	V_{DS} = 500V, V_{GS} = 0V	-	-	10	μA
		V_{DS} = 400V, T_C = 125°C	-	-	100	
I_{GSS}	Gate to Body Leakage Current	V_{GS} = ±30V, V_{DS} = 0V	-	-	±100	nA
On Characteristics						
$V_{GS(th)}$	Gate Threshold Voltage	V_{GS} = V_{DS}, I_D = 250μA	3.0	-	5.0	V
$R_{DS(on)}$	Static Drain to Source On Resistance	V_{GS} = 10V, I_D = 6A	-	0.59	0.7	Ω
g_{FS}	Forward Transconductance	V_{DS} = 40V, I_D = 6A (Note 4)	-	12	-	S
Dynamic Characteristics						
C_{iss}	Input Capacitance	V_{DS} = 25V, V_{GS} = 0V, f = 1MHz	-	1050	1395	pF
C_{oss}	Output Capacitance		-	135	180	pF
C_{rss}	Reverse Transfer Capacitance		-	11	17	pF
$Q_{g(tot)}$	Total Gate Charge at 10V	V_{DS} = 400V, I_D = 11.5A, V_{GS} = 10V (Note 4, 5)	-	21	30	nC
Q_{gs}	Gate to Source Gate Charge		-	6	-	nC
Q_{gd}	Gate to Drain “Miller” Charge		-	9	-	nC
Switching Characteristics						
$t_{d(on)}$	Turn-On Delay Time	V_{DD} = 250V, I_D = 11.5A, R_G = 25Ω (Note 4, 5)	-	21	50	ns
t_r	Turn-On Rise Time		-	45	100	ns
$t_{d(off)}$	Turn-Off Delay Time		-	50	110	ns
t_f	Turn-Off Fall Time		-	35	80	ns
Drain-Source Diode Characteristics						
I_S	Maximum Continuous Drain to Source Diode Forward Current		-	-	11.5	A
I_{SM}	Maximum Pulsed Drain to Source Diode Forward Current		-	-	46	A
V_{SD}	Drain to Source Diode Forward Voltage	V_{GS} = 0V, I_{SD} = 11.5A	-	-	1.5	V
t_{rr}	Reverse Recovery Time	V_{GS} = 0V, I_{SD} = 11.5A, dI_F/dt = 100A/μs (Note 4)	-	134	-	ns
Q_{rr}	Reverse Recovery Charge		-	0.37	-	μC

Notes:

1. Repetitive Rating: Pulse width limited by maximum junction temperature
2. L = 6.9mH, I_{AS} = 11.5A, V_{DD} = 50V, R_G = 25Ω, Starting T_J = 25°C
3. I_{SD} ≤ 11.5A, di/dt ≤ 200A/μs, V_{DD} ≤ BV_{DSS}, Starting T_J = 25°C
4. Pulse Test: Pulse width ≤ 300μs, Duty Cycle ≤ 2%
5. Essentially Independent of Operating Temperature Typical Characteristics

Typical Performance Characteristics

Figure 1. On-Region Characteristics

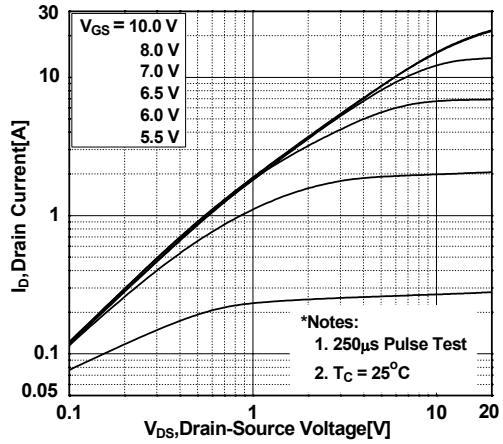

Figure 2. Transfer Characteristics

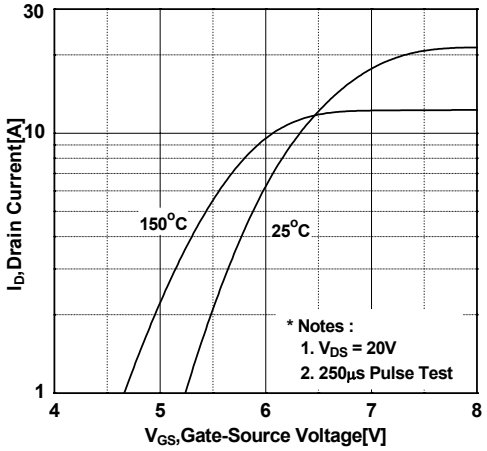

Figure 3. On-Resistance Variation vs. Drain Current and Gate Voltage

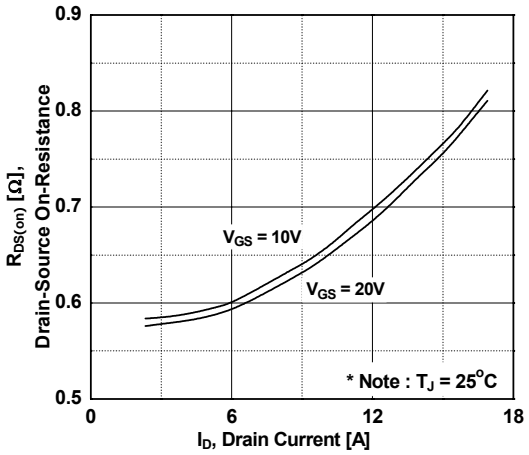

Figure 4. Body Diode Forward Voltage Variation vs. Source Current and Temperature

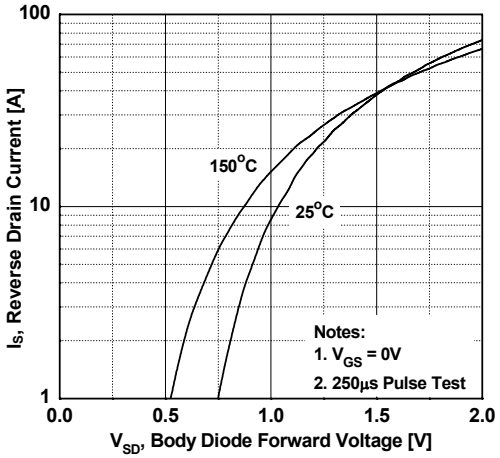

Figure 5. Capacitance Characteristics

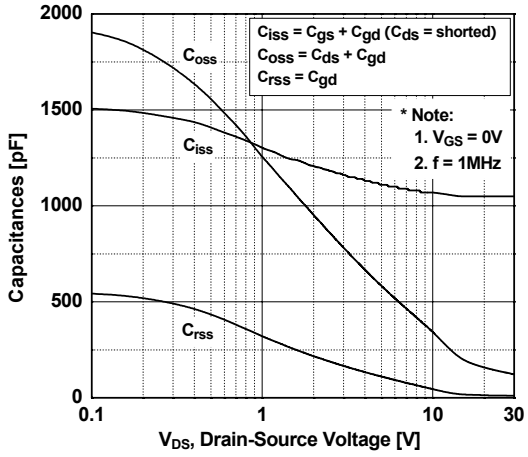

Figure 6. Gate Charge Characteristics

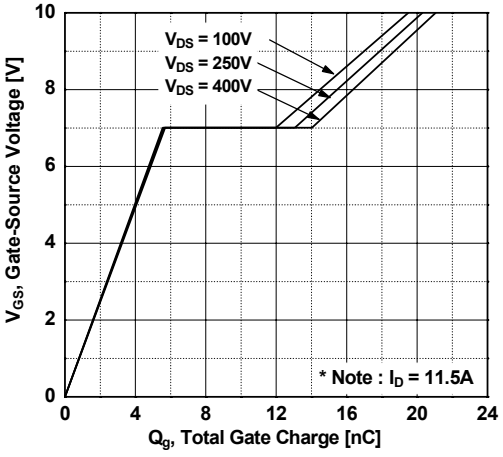

Typical Performance Characteristics (Continued)

Figure 7. Breakdown Voltage Variation vs. Temperature

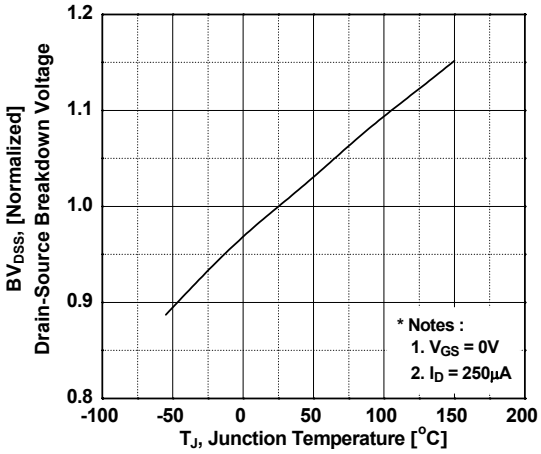

Figure 8. Maximum Safe Operating Area

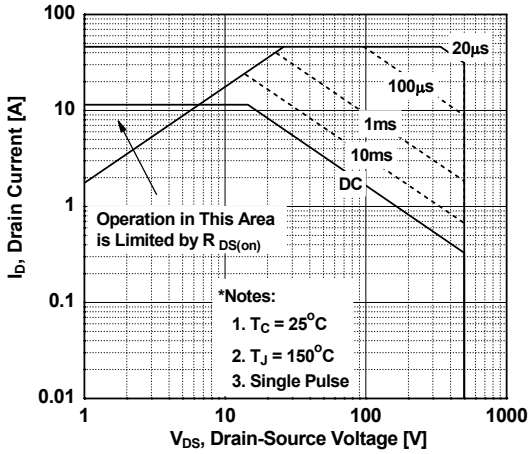

Figure 10. Maximum Drain Current vs. Case Temperature

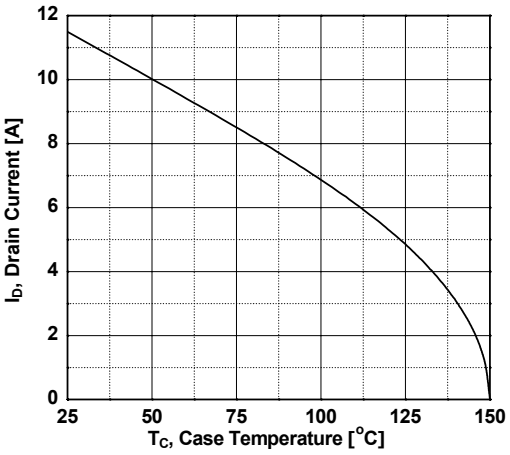

Figure 11. Transient Thermal Response Curve

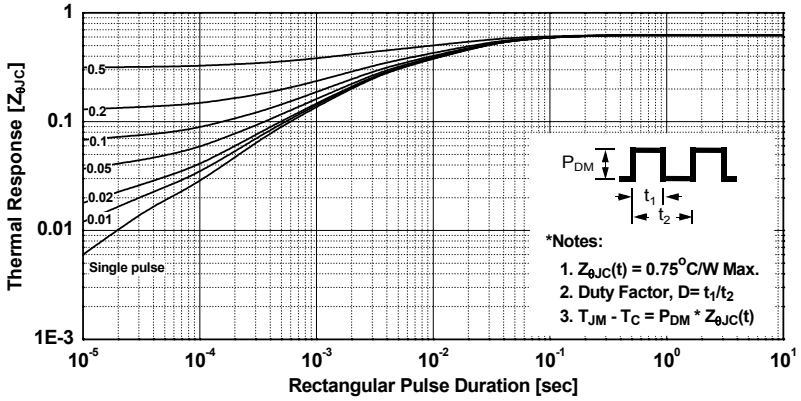

Gate Charge Test Circuit & Waveform

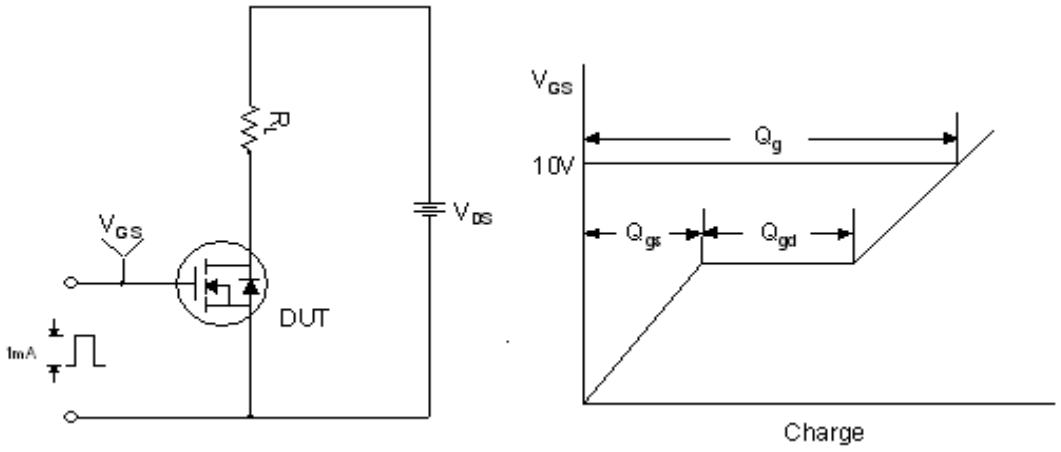

Resistive Switching Test Circuit & Waveforms

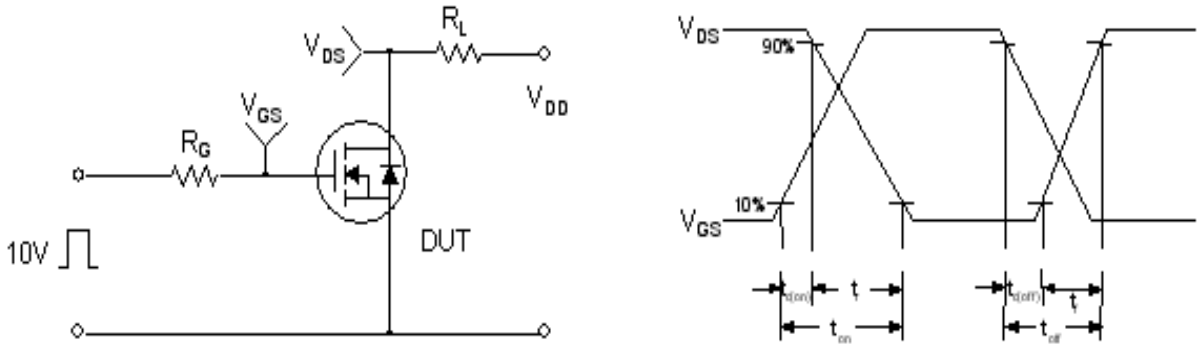

Unclamped Inductive Switching Test Circuit & Waveforms

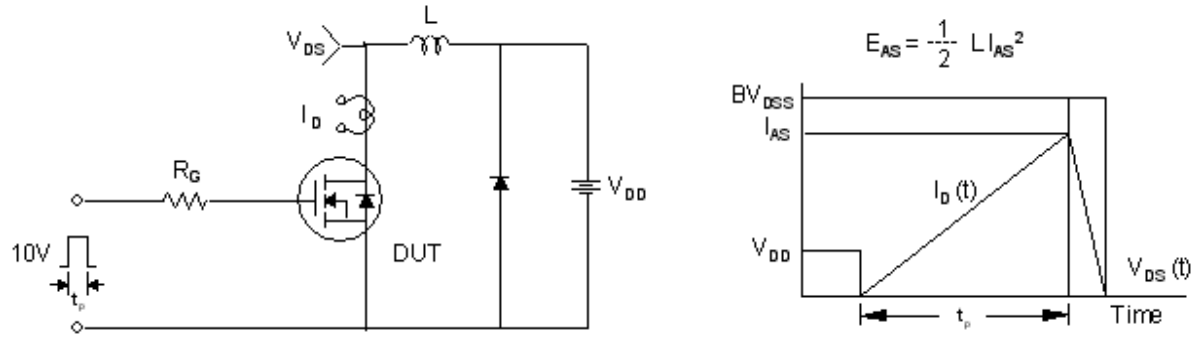

Peak Diode Recovery dv/dt Test Circuit & Waveforms

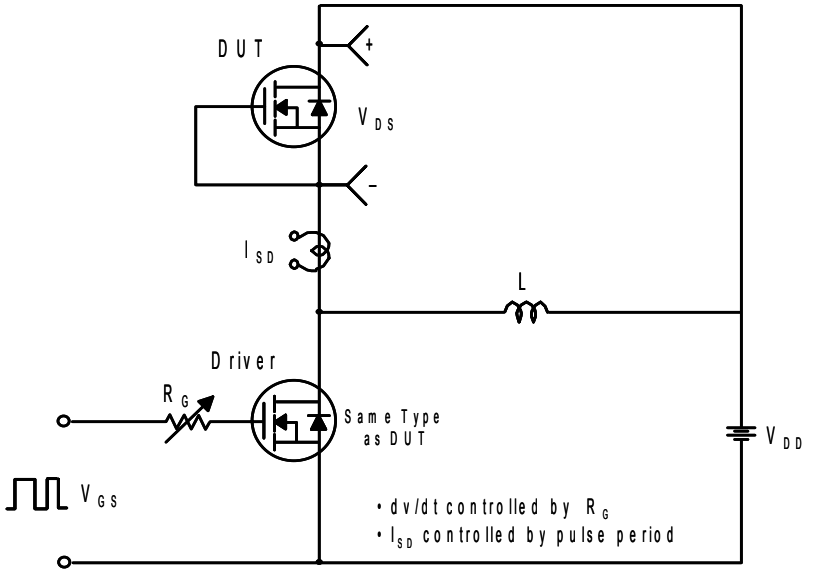

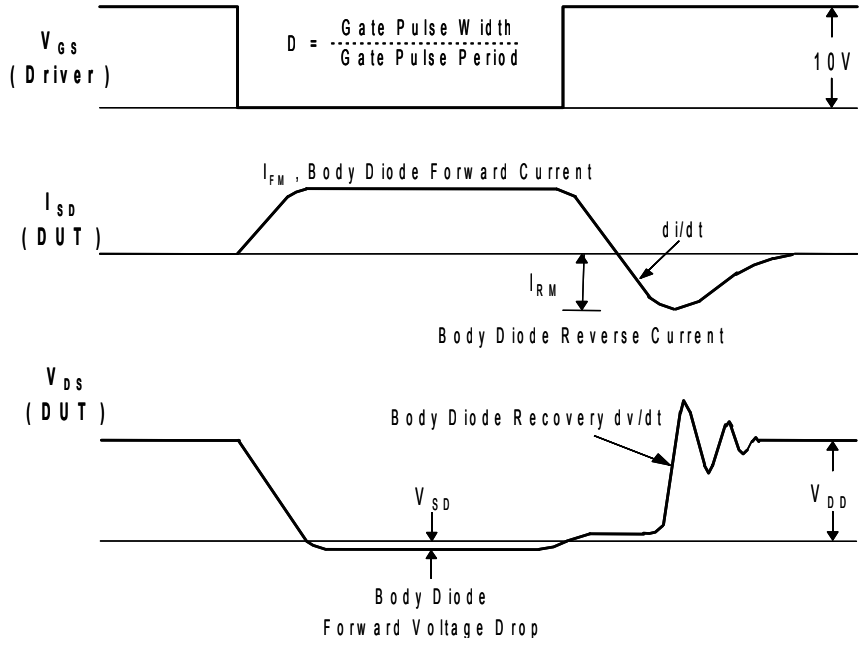

Mechanical Dimensions

D2-PAK

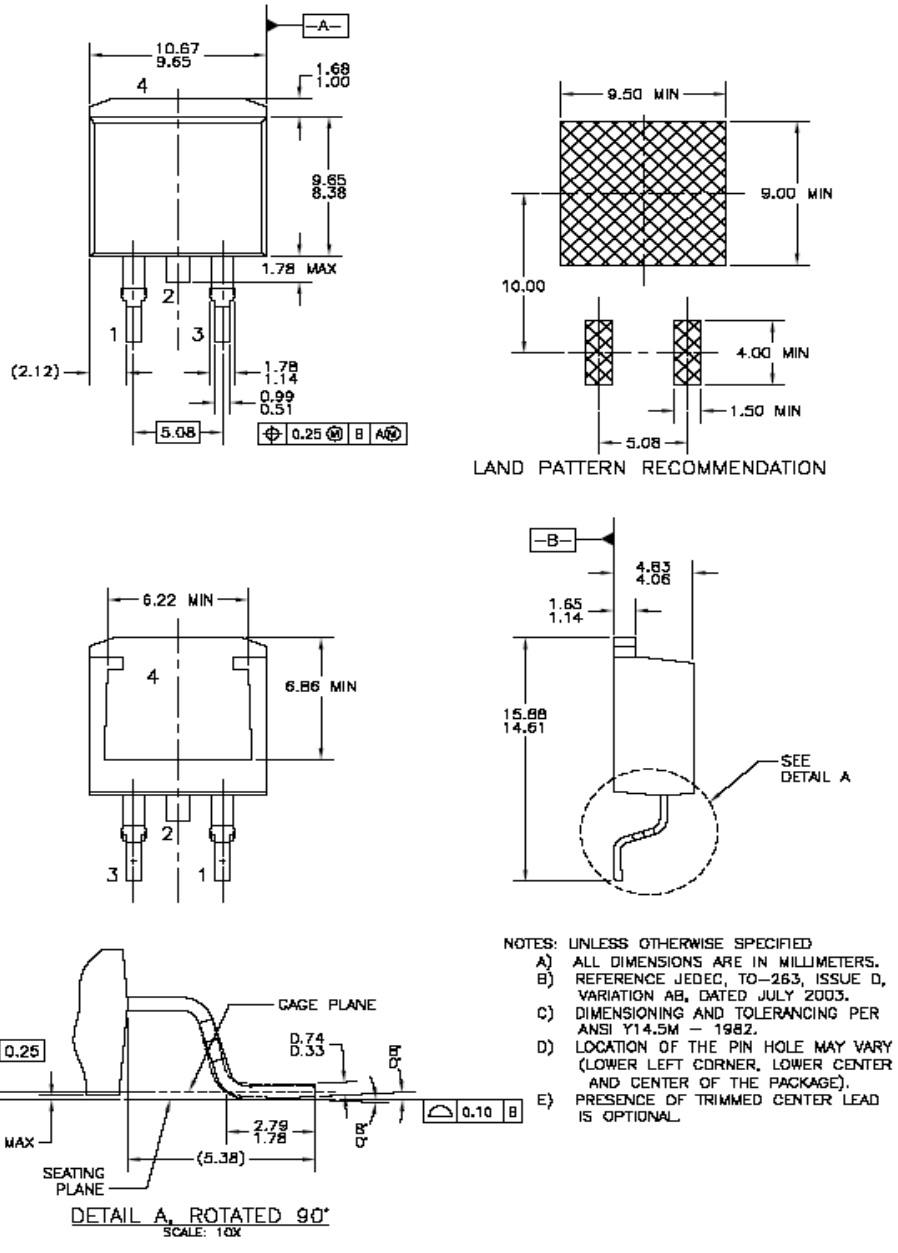

Dimensions in Millimeters

FAIRCHILD SEMICONDUCTOR®

TRADEMARKS

The following are registered and unregistered trademarks and service marks Fairchild Semiconductor owns or is authorized to use and is not intended to be an exhaustive list of all such trademarks.

ACEx®
Build it Now™
CorePLUS™
CROSSVOLT™
CTL™
Current Transfer Logic™
EcoSPARK®
F®
Fairchild®
Fairchild Semiconductor®
FACT Quiet Series™
FACT®
FAST®
FastvCore™
FPS™
FRFET®
Global Power Resource℠
Green FPS™
Green FPS™ e-Series™
GTO™
i-Lo™
IntelliMAX™
ISOPLANAR™
MegaBuck™
MICROCOUPLER™
MicroFET™
MicroPak™
MillerDrive™
Motion-SPM™
OPTOLOGIC®
OPTOPLANAR®
®
PDP-SPM™
Power220®
Power247®
POWEREDGE®
Power-SPM™
PowerTrench®
Programmable Active Droop™
QFET®
QS™
QT Optoelectronics™
Quiet Series™
RapidConfigure™
SMART START™
SPM®
STEALTH™
SuperFET™
SuperSOT™-3
SuperSOT™-6
SuperSOT™-8
SyncFET™
The Power Franchise®
the power franchise
TinyBoost™
TinyBuck™
TinyLogic®
TINYOPTO™
TinyPower™
TinyPWM™
TinyWire™
µSerDes™
UHC®
UniFET™
VCX™

DISCLAIMER

FAIRCHILD SEMICONDUCTOR RESERVES THE RIGHT TO MAKE CHANGES WITHOUT FURTHER NOTICE TO ANY PRODUCTS HEREIN TO IMPROVE RELIABILITY, FUNCTION, OR DESIGN. FAIRCHILD DOES NOT ASSUME ANY LIABILITY ARISING OUT OF THE APPLICATION OR USE OF ANY PRODUCT OR CIRCUIT DESCRIBED HEREIN; NEITHER DOES IT CONVEY ANY LICENSE UNDER ITS PATENT RIGHTS, NOR THE RIGHTS OF OTHERS. THESE SPECIFICATIONS DO NOT EXPAND THE TERMS OF FAIRCHILD'S WORLDWIDE TERMS AND CONDITIONS, SPECIFICALLY THE WARRANTY THEREIN, WHICH COVERS THESE PRODUCTS.

LIFE SUPPORT POLICY

FAIRCHILD'S PRODUCTS ARE NOT AUTHORIZED FOR USE AS CRITICAL COMPONENTS IN LIFE SUPPORT DEVICES OR SYSTEMS WITHOUT THE EXPRESS WRITTEN APPROVAL OF FAIRCHILD SEMICONDUCTOR CORPORATION.

As used herein:

1. Life support devices or systems are devices or systems which, (a) are intended for surgical implant into the body or (b) support or sustain life, and (c) whose failure to perform when properly used in accordance with instructions for use provided in the labeling, can be reasonably expected to result in a significant injury to the user.
2. A critical component in any component of a life support, device, or system whose failure to perform can be reasonably expected to cause the failure of the life support device or system, or to affect its safety or effectiveness.

PRODUCT STATUS DEFINITIONS

Definition of Terms

Datasheet Identification	Product Status	Definition
Advance Information	Formative or In Design	This datasheet contains the design specifications for product development. Specifications may change in any manner without notice.
Preliminary	First Production	This datasheet contains preliminary data; supplementary data will be published at a later date. Fairchild Semiconductor reserves the right to make changes at any time without notice to improve design.
No Identification Needed	Full Production	This datasheet contains final specifications. Fairchild Semiconductor reserves the right to make changes at any time without notice to improve design.
Obsolete	Not In Production	This datasheet contains specifications on a product that has been discontinued by Fairchild Semiconductor. The datasheet is printed for reference information only.

Rev. I31