FDA802B

2x150 W/1x300 W class D digital input automotive power amplifier with load value recognition and low voltage operation

Data brief

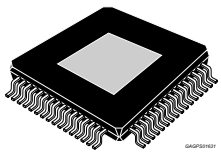

LQFP64 (exposed pad up)

Features

- AEC-Q100 (rev. G) qualified
- Integrated 110 dB D/A conversion
- I^2S and TDM digital input (3.3/1.8 V)
- Input sampling frequency: 44.1 kHz, 48 kHz, 96 kHz, 192 kHz
- Full I^2C bus driving (3.3/1.8 V) with 8 different I^2C bus addresses
- EMI control for FM/AM compatibility
- EMI compliance evaluated following normative IEC61967-4 and IEC62132-4
- Low radiation function (LRF)
- Very low quiescent current
- Output low-pass filter included in the feedback allowing outstanding audio performances
- Wide operating supply range: target 5.5 V-50 V
- MOSFET power outputs allowing high output power capability under step-up voltage:
  - 2 x 120 W /4 Ω @ 35 V, 1 kHz THD = 1% (2 x150 W /4 Ω @ 35 V, 1 kHz THD =10%)
  - 2 x 140 W /8 Ω @ 50 V, 1 kHz THD = 1% (2 x180 W /8 Ω @ 50 V, 1 kHz THD =10%)
  - 2 x 270 W /8 Ω @ 50 V max output power
- Operation under standard car battery with high output power:
  - 2 x 22 W /4 Ω @ 14 V, 1 kHz THD = 1% (2 x 28 W /4 Ω @ 14 V, 1 kHz THD = 10%)
  - 2 x 37 W /2 Ω @ 14 V, 1 kHz THD = 1% (2 x 46 W /2 Ω @ 14 V, 1 kHz THD = 10%)
- Possibility to drive 2 Ω loads (until 18 V)
- Independent channel operation
- I^2C bus diagnostics:
  - Short to Vcc/GND diagnostic (including soft shorts up to 1k Ω)
  - DC load diagnostic
  - AC load diagnostic (working both with internally generated and externally generated tone)
- Integrated fault protection
- Input and output offset detector
- Clipping detector
- Legacy mode ('no I^2C' mode)
- Short circuit and ESD integrated protections
- Package: LQFP64 exposed pad up

Table 1. Device summary

Order code	Package	Packing
FDA802B-VYY	LQFP64 (exp. pad up)	Tray
FDA802B-VYT	LQFP64 (exp. pad up)	Tape & reel

For further information contact your local STMicroelectronics sales office. www.st.com

Contents

1 Description 3

2 Block and pins description diagrams 4

2.1 Pins description 5

3 Package information 7

3.1 LQFP64 (10x10x1.4 mm exp. pad up) package information 7

3.2 LQFP64 (10x10x1.4 mm exp. pad up) marking information 9

4 Revision history 10

1 Description

The FDA802B is a dual bridge class D amplifier, designed in the most advanced BCD technology specially intended for car radio applications.

The FDA802B integrates a high performance D/A converter together with powerful MOSFET outputs in class D, to get an outstanding efficiency compared to the standard class AB.

The integrated D/A converter allows to reach outstanding performances (110 dB S/N ratio with 110 dB of dynamic range).

Thanks to the high-voltage MOSFET output stages it can operate both under standard car battery (6-18 V) and under boosted power supply (up to 50 V) to reach the highest possible power with integrated solution.

The feedback loop is including the output L-C low-pass filter, allowing superior frequency response linearity and lower distortion independently from the inductor and capacitor quality.

FDA802B is fully configurable through I^2C bus interface and integrates a complete diagnostics array specially intended for automotive applications.

Thanks to the solutions implemented to solve the EMI problems, the device is intended to be used in the standard single DIN car-radio box together with the tuner.

Moreover FDA802B is able to work with power supply as low as 5.5 V, thus supporting the most recent low voltage ('start-stop') car-makers specification.

The device provides a breakthrough innovative digital impedance-meter which is able to communicate via I^2C the output load value.

2 Block and pins description diagrams

Figure 1. Block diagram

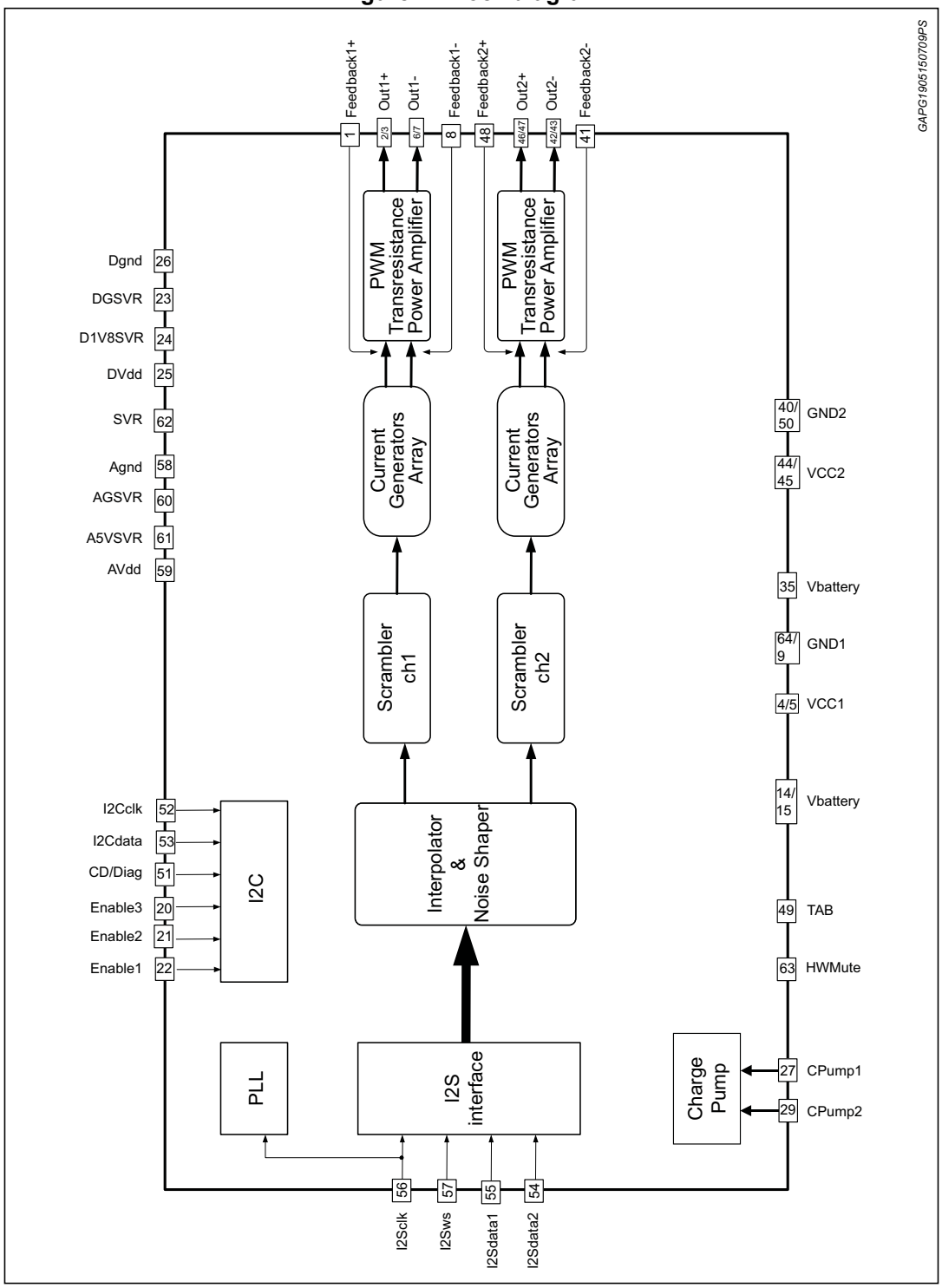

2.1 Pins description

Figure 2. Pins connection diagram

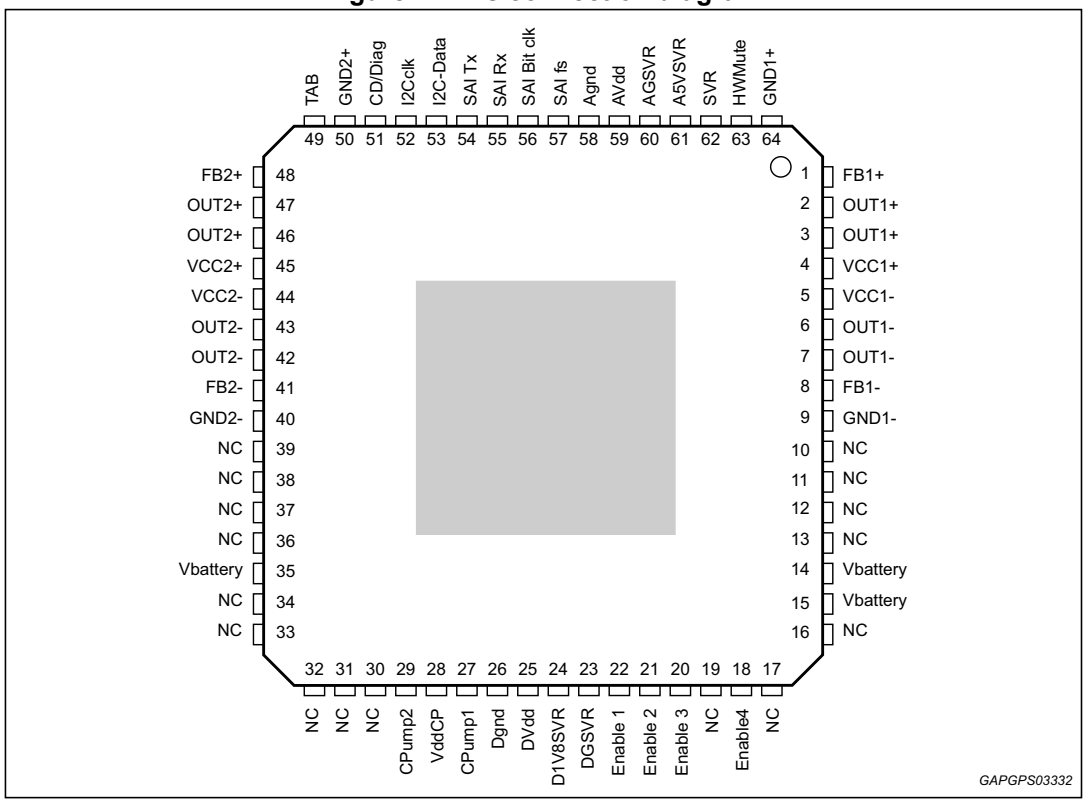

Table 2. Pins list description

N#	Pin	Function
1	FB1+	Channel 1, half bridge plus, Feedback
2	OUT1+	Channel 1, half bridge plus, Output
3	OUT1+	Channel 1, half bridge plus, Output
4	VCC1+	Channel 1, half bridge plus, Boosted Power Supply
5	VCC1-	Channel 1, half bridge minus, Boosted Power Supply
6	OUT1-	Channel 1, half bridge minus, Output
7	OUT1-	Channel 1, half bridge minus, Output
8	FB1-	Channel 1, half bridge minus, Feedback
9	GND1-	Channel 1, half bridge minus, Power Ground
10-13, 16-17, 19, 30-34, 36-39	N.C.	Not connected
14	Vbattery	Main battery voltage (14V)
15	Vbattery	Main battery voltage (14V)
18	Enable4	Chip Enable 4

Table 2. Pins list description (continued)

N#	Pin	Function
20	Enable3	Chip Enable 3
21	Enable2	Chip Enable 2
22	Enable1	Chip Enable 1
23	DGSVR	Negative Analog Supply V(SVR)-0.9V (Internally generated)
24	D1V8SVR	Positive Digital Supply V(SVR)+0.9V (Internally generated)
25	DVdd	Digital supply
26	Dgnd	Digital ground
27	CPump1	Charge Pump pin1
28	VddCP	Charge Pump output voltage
29	CPump2	Charge Pump pin2
35	Vbattery	Main battery voltage (14V)
40	GND2-	Channel 2, half bridge minus, Power Ground
41	FB2-	Channel 2, half bridge minus, Feedback
42	OUT2-	Channel 2, half bridge minus, Output
43	OUT2-	Channel 2, half bridge minus, Output
44	VCC2-	Channel 2, half bridge minus, Boosted Power Supply
45	VCC2+	Channel 2, half bridge plus, Boosted Power Supply
46	OUT2+	Channel 2, half bridge plus, Output
47	OUT2+	Channel 2, half bridge plus, Output
48	FB2+	Channel 2, half bridge plus, Feedback
49	TAB	Device slug connection
50	GND2+	Channel 2, half bridge plus, Power Ground
51	CD/Diag	Clip detector / diagnostic pin
52	I2CClk	I^2C clock
53	I2C-Data	I^2C Data Input
54	SAI Tx	I^2S/TDM Data 2 (Data output)
55	SAI Rx	I^2S/TDM Data 1 (Data input)
56	SAI Bit clk	I^2S/TDM Clock
57	SAI fs	I^2S/TDM Sws (Frame Sync Input)
58	Agnd	Analog ground
59	AVdd	Analog supply
60	AGSVR	Negative Analog Supply V(SVR)-2.5V (Internally generated)
61	A5VSVR	Positive Analog Supply V(SVR)+2.5V (Internally generated)
62	SVR	Supply Voltage Ripple Rejection Capacitor
63	HWMute	Hardware mute pin
64	GND1+	Channel 1, half bridge plus, Power Ground

3 Package information

In order to meet environmental requirements, ST offers these devices in different grades of ECOPACK® packages, depending on their level of environmental compliance. ECOPACK® specifications, grade definitions and product status are available at: www.st.com.

ECOPACK® is an ST trademark.

3.1 LQFP64 (10x10x1.4 mm exp. pad up) package information

Figure 3. LQFP64 (10x10x1.4 mm exp. pad up) package outline

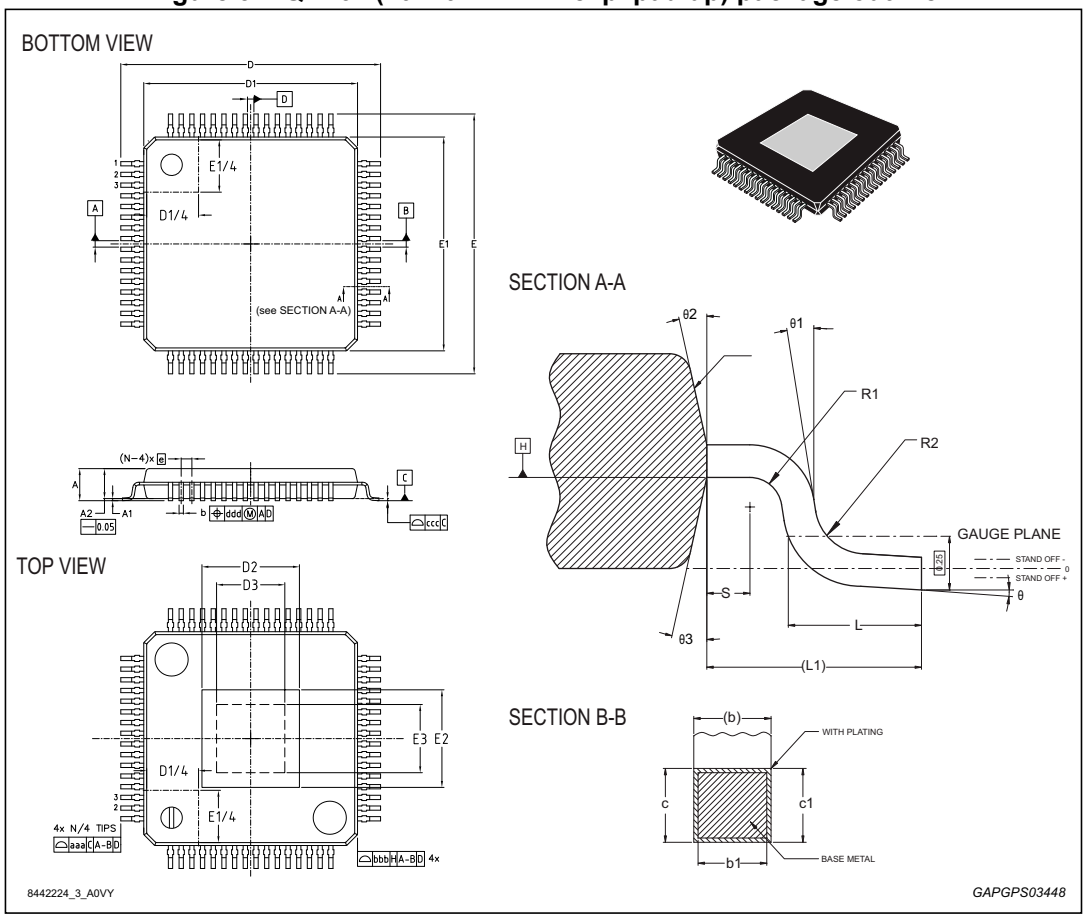

Table 3. LQFP64 (10x10x1.4 mm exp. pad up) package mechanical data

Symbol	Dimensions in mm		
	Min.	Typ.	Max.
Θ	0°	3.5°	6°
Θ1	0°	9°	12°
Θ2	11°	12°	13°
Θ3	11°	12°	13°
A	-	-	1.49
A1	-0.04	-	0.04
A2	1.35	1.4	1.45
b	-	-	0.27
b1	0.17	0.20	0.23
c	0.09	-	0.20
c1	0.09	0.127	0.16
D	12.00 BSC		
D1(1) (2)	10.00 BSC		
D2	**See VARIATIONS**		
e	0.50 BSC		
E	12.00 BSC		
E1(1) (2)	10.00 BSC		
E2	**See VARIATIONS**		
L	0.45	0.60	0.75
L1	1.00 REF		
N	-	64	-
R1	0.08	-	-
R2	0.08	-	0.20
S	0.20	-	-
Tolerance of form and position			
aaa	-	0.20	-
bbb	-	0.20	-
ccc	-	0.08	-
ddd	-	0.08	-

Table 3. LQFP64 (10x10x1.4 mm exp. pad up) package mechanical data (continued)

Symbol	Dimensions in mm		
	Min.	Typ.	Max.
VARIATIONS			
Pad option 6.0x6.0 (T1-T3)(3)			
D2	-	-	6.61
E2	-	-	6.61
D3	4.8	-	-
E3	4.8	-	-

1. Dimensions D1 and E1 do not include mold flash or protrusions.
   Allowable mold flash or protrusion is “0.25 mm” per side.
2. The Top package body size may be smaller than the bottom package size by much as 0.15 mm.
3. Number, dimensions and position of shown groves are for reference only:

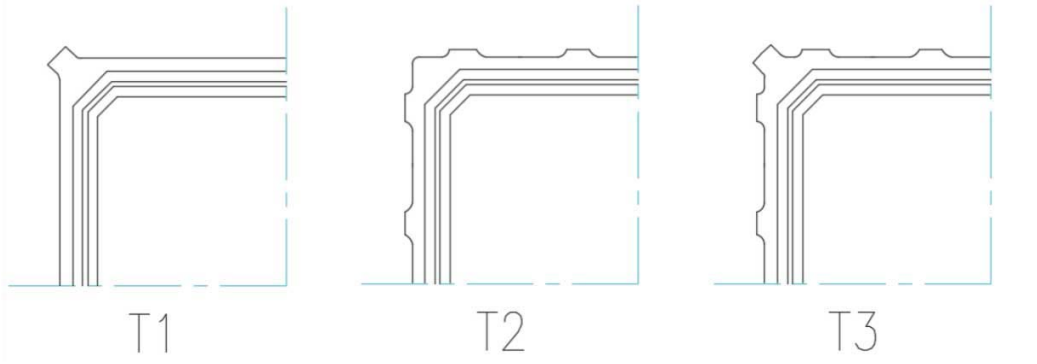

GADG2108170827PS

3.2 LQFP64 (10x10x1.4 mm exp. pad up) marking information

Figure 4. LQFP64 (10x10x1.4 mm exp. pad up) marking information

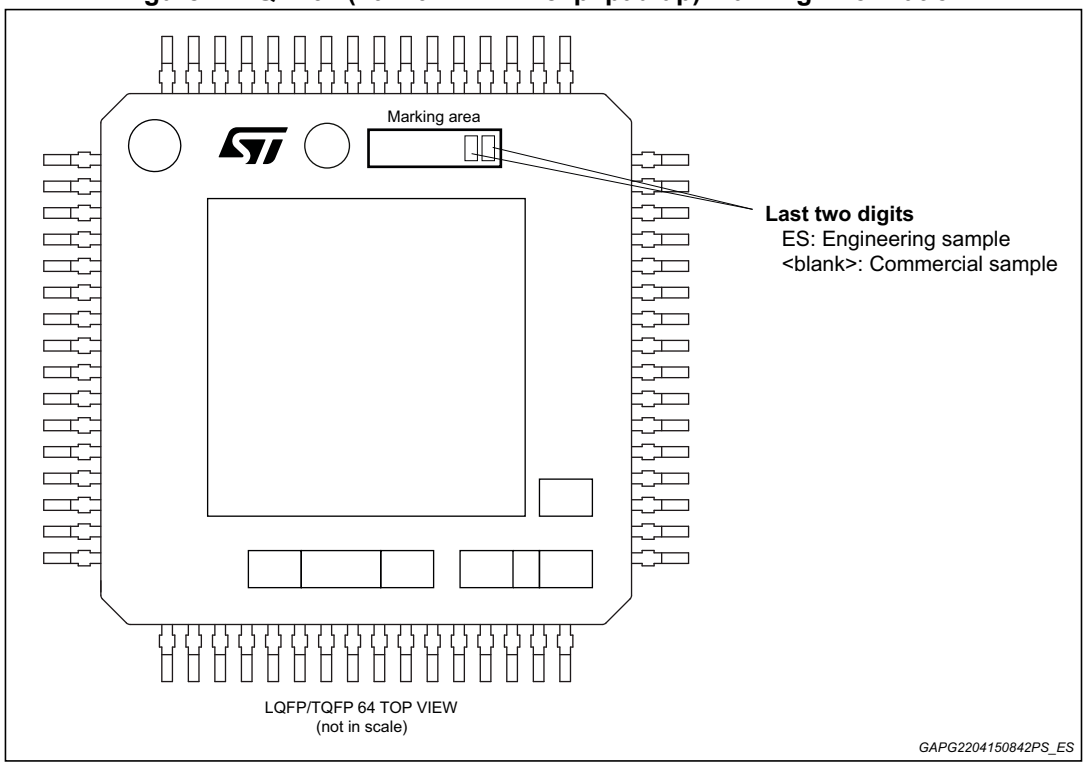

Parts marked as ‘ES’ are not yet qualified and therefore not approved for use in production. ST is not responsible for any consequences resulting from such use. In no event will ST be liable for the customer using any of these engineering samples in production. ST’s Quality department must be contacted to run a qualification activity prior to any decision to use these engineering samples.

4 Revision history

Table 4. Document revision history

Date	Revision	Changes
14-Jun-2017	1	Initial release.
22-Aug-2017	2	Updated *LQFP64 (10x10x1.4 mm exp. pad up) package information*.

IMPORTANT NOTICE – PLEASE READ CAREFULLY

STMicroelectronics NV and its subsidiaries (“ST”) reserve the right to make changes, corrections, enhancements, modifications, and improvements to ST products and/or to this document at any time without notice. Purchasers should obtain the latest relevant information on ST products before placing orders. ST products are sold pursuant to ST’s terms and conditions of sale in place at the time of order acknowledgement.

Purchasers are solely responsible for the choice, selection, and use of ST products and ST assumes no liability for application assistance or the design of Purchasers’ products.

No license, express or implied, to any intellectual property right is granted by ST herein.

Resale of ST products with provisions different from the information set forth herein shall void any warranty granted by ST for such product.

ST and the ST logo are trademarks of ST. All other product or service names are the property of their respective owners.

Information in this document supersedes and replaces information previously supplied in any prior versions of this document.

© 2017 STMicroelectronics – All rights reserved