FCM2630-C00 - Pre-calibrated Module for Refrigerant Gas R-32

Features:

* **Factory calibrated**
* **Temperature compensation circuit**
* **Resistant to interference gases**
* **Compact embedded type module**

Applications:

* **Refrigerant gas leak detection in air conditioning/refrigeration systems**

FCM2630-C00 is an embedded type module using the semiconductor gas sensor TGS2630 which is optimized to detect A2L refrigerant gas R-32.

This module enables users to easily build a reliable gas leakage detection system by eliminating electronic circuit design for temperature compensation and the calibration process. In addition, a connector allows easy replacement of the gas sensor module for periodic maintenance.

The TGS2630 gas sensor has a built-in filter to reduce the influence of alcohol and other interference gases, resulting in high selectivity to R-32. For more detailed information on the gas sensor, including sensitivity characteristics, see *TGS2630 Product Information.*

FCM2630-C00 is capable of satisfying the JRA4068:2016 standard (Performance 3) established by the Japan Refrigeration and Air Conditioning Industry Association.

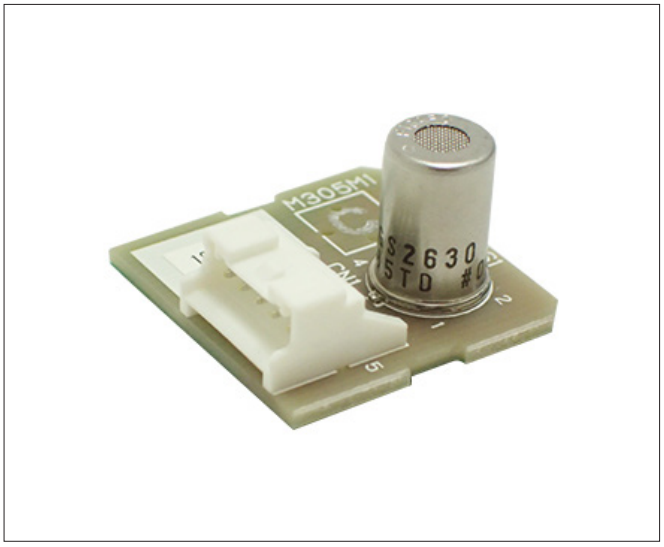

Circuit Diagram

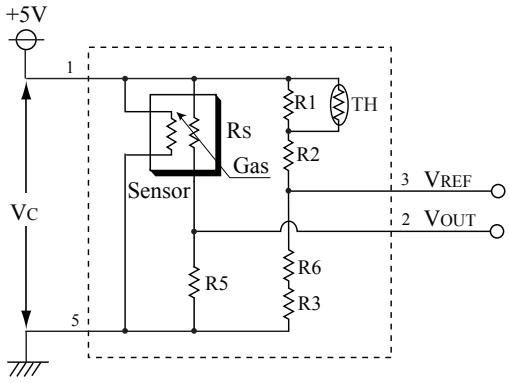

VC: Circuit voltage
VOUT: Output voltage
VREF: Reference voltage

Pin Connections

Pin No.	Name	Description
1	Vc	Circuit voltage
2	Vout	Output voltage
3	VREF	Reference voltage
4	-	-
5	GND	Common ground

Connector model: S05B-PASK-2 (made by JST)
Recommended receptacle for connector: PAP-05V-S (made by JST)

Specifications

Model No.		FCM2630-C00	
Gas sensor		TGS2630	
Target gases		Refrigerant gas R-32	
Circuit voltage	Vc	5.0±0.2V DC	
Output voltage	V_{OUT}	3.5±1.0V in 5000ppm R-32 (under standard test conditions) Malfunction condition: V_{OUT} < 0.05V or V_{OUT} > 4.95V (Vc = 5.00V)	
Reference voltage	V_{REF}	3.5±1.0V (under the standard test conditions) Malfunction condition: V_{REF} < 0.50V or V_{REF} > 4.50V (Vc = 5.00V)	
Initial alarm accuracy		2800~9000ppm R-32 (under standard test conditions) Alarm state: $V_{OUT} \geq V_{REF}$ Normal state: $V_{OUT} < V_{REF}$	
Warm-up time		≤60 seconds (time before $V_{OUT} < V_{REF}$ after power is turned on in a clean atmosphere)	
Operating conditions		-10˚~+50˚C, 20~95%RH (avoid condensation)	
Power consumption		approx. 0.3W	
Weight		approx. 4g	
Dimensions		25 x 25 x 17mm	
Standard test conditions	Test gas conditions	20˚±2˚C, 65±5%RH	
	Circuit conditions	Vc = 5.00±0.05V DC	
	Conditioning period prior to test	≥1 day	

NOTE: If the internal temperature near the gas sensor module becomes higher than the external ambient temperature by 10˚C or more due to heat generated by electronic components in a device into which this gas sensor module is incorporated, the set alarm threshold may drift due to change of the reference voltage (V_{REF}). Please consult with Figaro if there is difficulty in designing a device so as to keep the temperature rise inside the device within 10˚C.

Structure and Dimensions

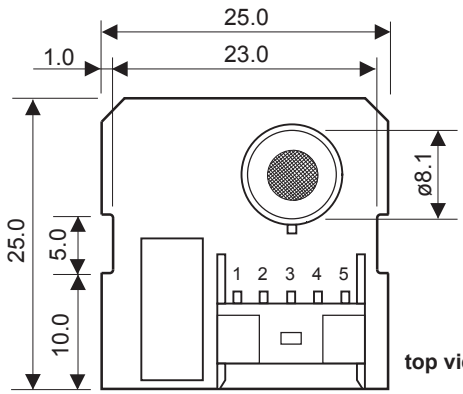

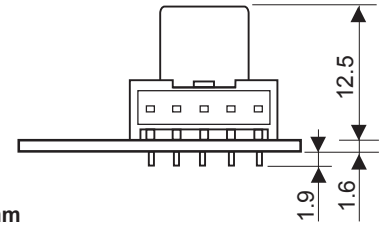

u/m: mm

Figaro Engineering Inc. reserves the right to make changes without notice to this product to improve reliability, functioning, or design.

FIGARO ENGINEERING INC.
1-5-11 Senba-nishi
Mino, Osaka 562-8505 JAPAN
Phone: (81)-72-728-2561
Fax: (81)-72-728-0467
www.figaro.co.jp
email: figaro@figaro.co.jp

REV: 05/19