## Features

- Sensitive Layer Over a 0.8 µm CMOS Array
- Image Zone: 0.4 x 14 mm = 0.02" x 0.55"
- Image Array: 8 x 280 = 2240 pixels
- Pixel Pitch: 50 µm x 50 µm = 500 dpi
- Pixel Clock: up to 2 MHz Enabling up to 1780 Frames per Second
- Die Size: 1.7 x 17.3 mm
- Operating Voltage: 3V to 5.5V
- Naturally Protected Against ESD: > 16 kV Air Discharge
- Power Consumption: 20 mW at 3.3V, 1 MHz, 25°C
- Operating Temperature Range: 0°C to +70°C: C suffix
- Resistant to Abrasion: >1 Million Finger Sweeps
- Chip-On-Board (COB) package or 20-lead Ceramic DIP available for development, with Specific Protective Layer

## Applications

- PDA (Access Control, Data Protection)
- Cellular Phones, SmartPhone (Access e-business)
- Notebook, PC-add on (Access Control, e-business)
- PIN Code Replacement
- Automated Teller Machine, POS
- Building Access
- Electronic Keys (Cars, Home,...)
- Portable Fingerprint Imaging for Law Enforcement
- TV Access

**Figure 1.** Fingerchip Packages

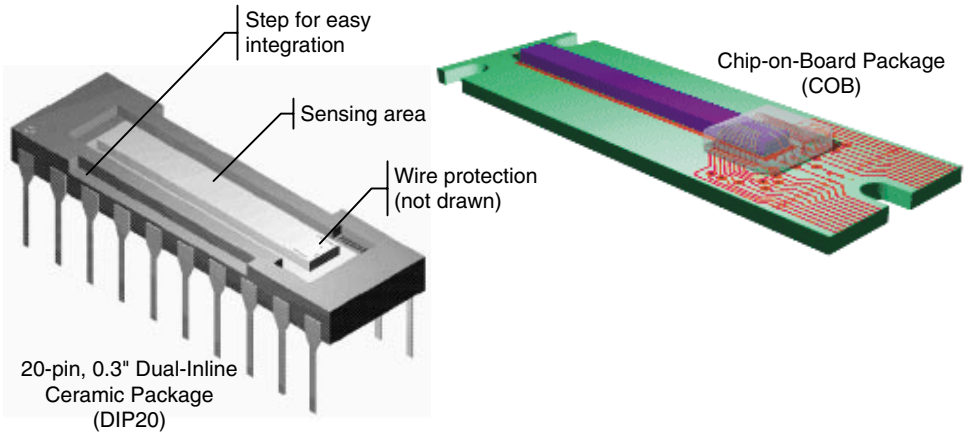


# Thermal Fingerprint Sensor with 0.4 mm x 14 mm (0.02" x 0.55") Sensing Area and Digital Output (On-chip ADC)

## FCD4B14 FingerChip™

Rev. 1962C–01/02

**Table 1.** Pin Description For DIP Ceramic Package

| Pin Number | Name | Type |
|---|---|---|
| 1 | GND | GND |
| 2 | AVE | Analog output |
| 3 | TPP | Power |
| 4 | VCC | Power |
| 5 | RST | Digital input |
| 6 | OE | Digital input |
| 7 | De0 | Digital output |
| 8 | De1 | Digital output |
| 9 | De2 | Digital output |
| 10 | De3 | Digital output |
| 11 | FPL | GND |
| 12 | Do3 | Digital output |
| 13 | Do2 | Digital output |
| 14 | Do1 | Digital output |
| 15 | Do0 | Digital output |
| 16 | GND | GND |
| 17 | ACKN | Digital output |
| 18 | PCLK | Digital input |
| 19 | TPE | Digital input |
| 20 | AVO | Analog output |

Die Attach is connected to pin 1 and 16, and must be grounded. FPL pin must be grounded.

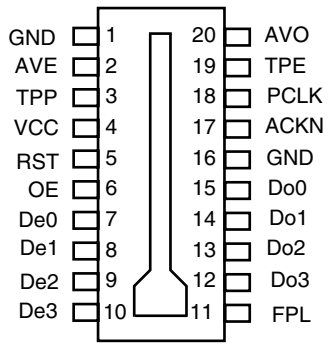

**Table 2.** Pin Description For Chip-On-Board Package

| Pin Number | Name | Type |
|---|---|---|
| 1 | GND | GND |
| 2 | AVE | Analog output |
| 3 | AVO | Analog output |
| 4 | TPP | Power |
| 5 | TPE | Digital input |
| 6 | VCC | Power |
| 7 | GND | GND |
| 8 | RST | Digital input |
| 9 | PCLK | Digital input |
| 10 | OE | Digital input |
| 11 | ACKN | Digital output |
| 12 | De0 | Digital output |
| 13 | Do0 | Digital output |
| 14 | De1 | Digital output |
| 15 | Do1 | Digital output |
| 16 | De2 | Digital output |
| 17 | Do2 | Digital output |
| 18 | De3 | Digital output |
| 19 | Do3 | Digital output |
| 20 | FPL | GND |
| 21 | GND | GND |

Die Attach is connected to pin 1, 7 and 21, and must be grounded. FPL pin must be grounded.

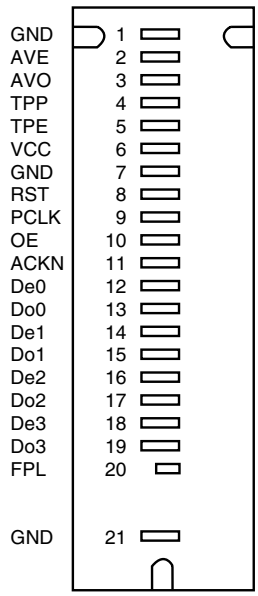

## Description

FCD4B14 is part of the FingerChip Atmel monolithic fingerprint sensor family for which no optics, no prism and no light source are required.

FCD4B14 is a single chip, high performance, low cost sensor based on temperature physical effects for fingerprint sensing.

FCD4B14 has a linear shape, allowing for the capture of a fingerprint image by sweeping the finger across the sensing area. After capturing several images, Atmel proprietary software can reconstruct a full 8-bit fingerprint image, if needed.

FCD4B14 has a small surface combined with CMOS technology, and a Chip-On-Board or ceramic dual-in-line package assembly. These facts contribute to a low-cost device.

FCD4B14 delivers a programmable number of images per second, while an integrated Analog to Digital Converter delivers a digital signal adapted to interfaces such as an EPP parallel port, USB microcontroller or directly to micro-processors. Thus, no frame grabber or glue interface is necessary to send the frames. These facts make FCD4B14 an easy device to include in any system for identification or verification applications.

**Table 3.** Absolute Maximum Ratings[1]

| Parameter | Symbol | Comments | Value | Unit |
|---|---|---|---|---|
| Positive supply voltage | $V_{CC}$ | | GND to 6.5 | V |
| Temperature stabilization power | TPP | | GND to 6.5 | V |
| Front plane | FPL | | GND to $V_{CC}$ | V |
| Digital input voltage | RST PCLK | | GND to $V_{CC}$ | V |
| Storage temperature | $T_{stg}$ | | -50 to +85 | °C |
| Lead temperature (soldering, 10 seconds.) | $T_{leads}$ | Do not solder<br>DIP: socket mandatory | **Forbidden** | °C |

Note: 1. Absolute maximum ratings are limiting values, to be applied individually, while other parameters are within specified operating conditions. Long exposure to maximum ratings may affect device reliability.

**Table 4.** Recommended Conditions Of Use

| Parameter | Symbol | Comments | Min | Typ | Max | Unit |
|---|---|---|---|---|---|---|
| Positive supply voltage | $V_{CC}$ | | 3V | 5V | 5.5V | V |
| Front plane | FPL | Must be grounded | GND | | | V |
| Digital input voltage | | | CMOS levels | | | V |
| Digital output voltage | | | CMOS levels | | | V |
| Digital load | $C_L$ | | | | 50 | pF |
| Analog load | $C_A$<br>$R_A$ | Not connected | | | | pF<br>kΩ |
| Operating temperature range | $T_{amb}$ | Civil: “C” grade | 0 to +70 | | | °C |
| Maximum current on TPP | ITPP | | 0 | | 100 | mA |

**Table 5.** Resistance

| Parameter | Min Value | Standard Method |
|---|---|---|
| **ESD** | | |
| On pins. HBM (Human Body Model) CMOS I/O | 2 kV | MIL-STD-883- method 3015.7 |
| On die surface (Zapgun)<br>Air discharge | ±16 kV | NF EN 6100-4-2 |
| **MECHANICAL ABRASION** | | |
| Number of cycles without lubricant multiply by a factor of 20 for correlation with a real finger | 200 000 | MIL E 12397B |
| **CHEMICAL RESISTANCE** | | |
| Cleaning agent, acid, grease, alcohol, diluted acetone | 4 hours | Internal method |

**Table 6.** Specifications

| Explanation Of Test Levels | |
|---|---|
| I | 100% production tested at +25°C |
| II | 100% production tested at +25°C, and sample tested at specified temperatures (AC testing done on sample) |
| III | Sample tested only |
| IV | Parameter is guaranteed by design and/or characterization testing |
| V | Parameter is a typical value only |
| VI | 100% production tested at temperature extremes |
| D | 100% probe tested on wafer at $T_{amb}$ = +25°C |

| Parameter | Symbol | Test Level | Min | Typ | Max | Unit |
|---|---|---|---|---|---|---|
| Resolution | | IV | | 50 | | micron |
| Size | | IV | | 8x280 | | pixel |
| Yield: number of bad pixels | | I | | | 15 | bad pixels |
| Equivalent resistance on TPP pin | | I | 23 | 30 | 47 | Ω |

**Table 7.** 5V. Power supply = +5V; $T_{amb}$ = 25°C; $F_{PCLK}$ = 1 MHz; Duty cycle = 50%; $C_{load}$ 120 pF on digital outputs, analog outputs disconnected otherwise specified.

| Parameter | Symbol | Test Level | Min | Typ | Max | Unit |
|---|---|---|---|---|---|---|
| **Power Requirements** | | | | | | |
| Positive supply voltage | $V_{CC}$ | | 4.5 | 5 | 5.5 | V |
| Digital positive supply current on $V_{CC}$ pin | | I | | 7 | 10 | mA |
| $C_{load}$ = 0 | $I_{CC}$ | IV | | 5 | 6 | mA |
| Power dissipation on $V_{CC}$ | | I | | 35 | 50 | mW |
| $C_{load}$ = 0 | $P_{CC}$ | IV | | 25 | 30 | mW |
| Current on $V_{CC}$ in NAP mode | $I_{CCNAP}$ | I | | | 10 | µA |
| **Analog Output** | | | | | | |
| Voltage range | $V_{AVx}$ | I | 0 | | 2.9 | V |
| **Digital Inputs** | | | | | | |
| Logic compatibility | | | | CMOS | | |
| Logic “0” voltage | $V_{IL}$ | I | 0 | | 1.2 | V |
| Logic “1” voltage | $V_{IH}$ | I | 3.6 | | VCC | V |
| Logic “0” current | $I_{IL}$ | I | -10 | | 0 | µA |
| Logic “1”current | $I_{IH}$ | I | 0 | | 10 | µA |
| **Digital Outputs** | | | | | | |
| Logic compatibility | | | | CMOS | | |
| Logic “0” voltage(1) | $V_{OL}$ | I | | | 1.5 | V |
| Logic “1” voltage(1) | $V_{OH}$ | I | 3.5 | | | V |

Note: 1. With $I_{OL}$ = 1 mA and $I_{OH}$ = -1 mA

**Table 8.** 3.3V. Power supply = +3.3V; $T_{amb}$ = 25°C; $F_{PCLK}$ = 1 MHz; Duty cycle = 50%; $C_{load}$ 120 pF on digital outputs, analog outputs disconnected otherwise specified

| Parameter | Symbol | Test Level | Min | Typ | Max | Unit |
|---|---|---|---|---|---|---|
| **Power Requirements** | | | | | | |
| Positive supply voltage | $V_{CC}$ | | 3.0 | 3.3 | 3.6 | V |
| Digital positive supply current on $V_{CC}$ pin<br>$C_{load}$= 0 | $I_{CC}$ | I<br>IV | | 6<br>5 | 10<br>6 | mA<br>mA |
| Power dissipation on $V_{CC}$<br>$C_{load}$ = 0 | $P_{CC}$ | I<br>IV | | 20<br>17 | 33<br>20 | mW<br>mW |
| Current on $V_{CC}$ in NAP mode | $I_{CCNAP}$ | I | | | 10 | µA |
| **Analog Output** | | | | | | |
| Voltage range | $V_{AVx}$ | I | 0 | | 2.9 | V |
| **Digital Inputs** | | | | | | |
| Logic compatibility | | | | CMOS | | |
| Logic “0” voltage | $V_{IL}$ | I | 0 | | 0.8 | V |
| Logic “1” voltage | $V_{IH}$ | I | 2.3 | | VCC | V |
| Logic “0” current | $I_{IL}$ | I | -10 | | 0 | µA |
| Logic “1”current | $I_{IH}$ | I | 0 | | 10 | µA |
| **Digital Outputs** | | | | | | |
| Logic compatibility | | | | CMOS | | |
| Logic “0” voltage(1) | $V_{OL}$ | I | | | 0.6 | V |
| Logic “1” voltage(1) | $V_{OH}$ | I | 2.4 | | | V |

Note: 1. With $I_{OL}$ = 1 mA and $I_{OH}$ = -1 mA

**Table 9.** Switching Performances. $T_{amb}$ = 25°C; $F_{PCLK}$ = 1 MHz; Duty cycle = 50%; $C_{load}$ 120 pF on digital and analog outputs otherwise specified

| Parameter | Symbol | Test level | Min | Typ | Max | Unit |
|---|---|---|---|---|---|---|
| Clock frequency | $f_{PCLK}$ | I | 0.5 | 1 | 2 | MHz |
| Clock pulse width (high) | $t_{HCLK}$ | I | 250 | | | ns |
| Clock pulse width (low) | $t_{LCLK}$ | I | 250 | | | ns |
| Clock setup time (high)/reset falling edge | $t_{Setup}$ | I | | | 0 | ns |
| No data change | $t_{NOOE}$ | IV | 100 | | | ns |

**Table 10.** 5.0V. All power supplies = +5 V

| Parameter | Symbol | Test level | Min | Typ | Max | Unit |
|---|---|---|---|---|---|---|
| Output delay from PCLK to ACKN rising edge | $t_{PLHACKN}$ | I | | | 85 | ns |
| Output delay from PCLK to ACKN falling edge | $t_{PHLACKN}$ | I | | | 80 | ns |
| Output delay from PCLK to Data output Dxi | $t_{PDATA}$ | I | | | 70 | ns |
| Output delay from PCLK to Analog output Avx | $t_{PAVIDEO}$ | I | | | 170 | ns |
| Output delay from OE to data high-Z | $t_{DATAZ}$ | IV | | 25 | | ns |
| Output delay from OE to data output | $t_{ZDATA}$ | IV | | 29 | | ns |

**Table 11.** 3.3V. All power supplies = +3.3 V

| Parameter | Symbol | Test level | Min | Typ | Max | Unit |
|---|---|---|---|---|---|---|
| Output delay from PCLK to ACKN rising edge | $t_{PLHACKN}$ | I | | | 110 | ns |
| Output delay from PCLK to ACKN falling edge | $t_{PHLACKN}$ | I | | | 95 | ns |
| Output delay from PCLK to Data output Dxi | $t_{PDATA}$ | I | | | 85 | ns |
| Output delay from PCLK to Analog output AVx | $t_{PAVIDEO}$ | I | | | 190 | ns |
| Output delay from OE to data high-Z | $t_{DATAZ}$ | IV | | 34 | | ns |
| Output delay from OE to data output | $t_{ZDATA}$ | IV | | 47 | | ns |

**Figure 2.** Reset

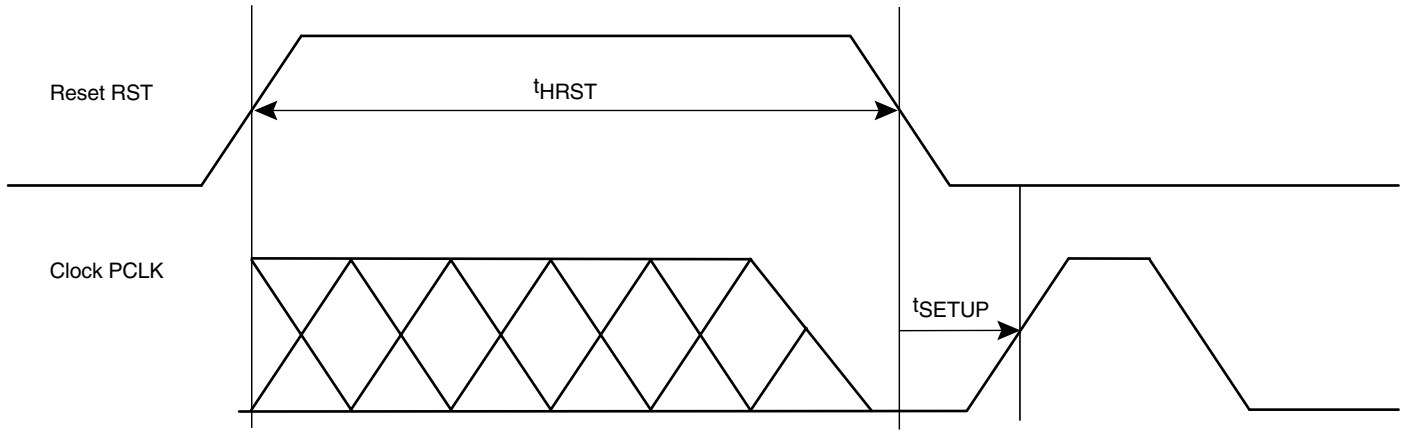


**Figure 3.** Read One Byte/Two Pixels

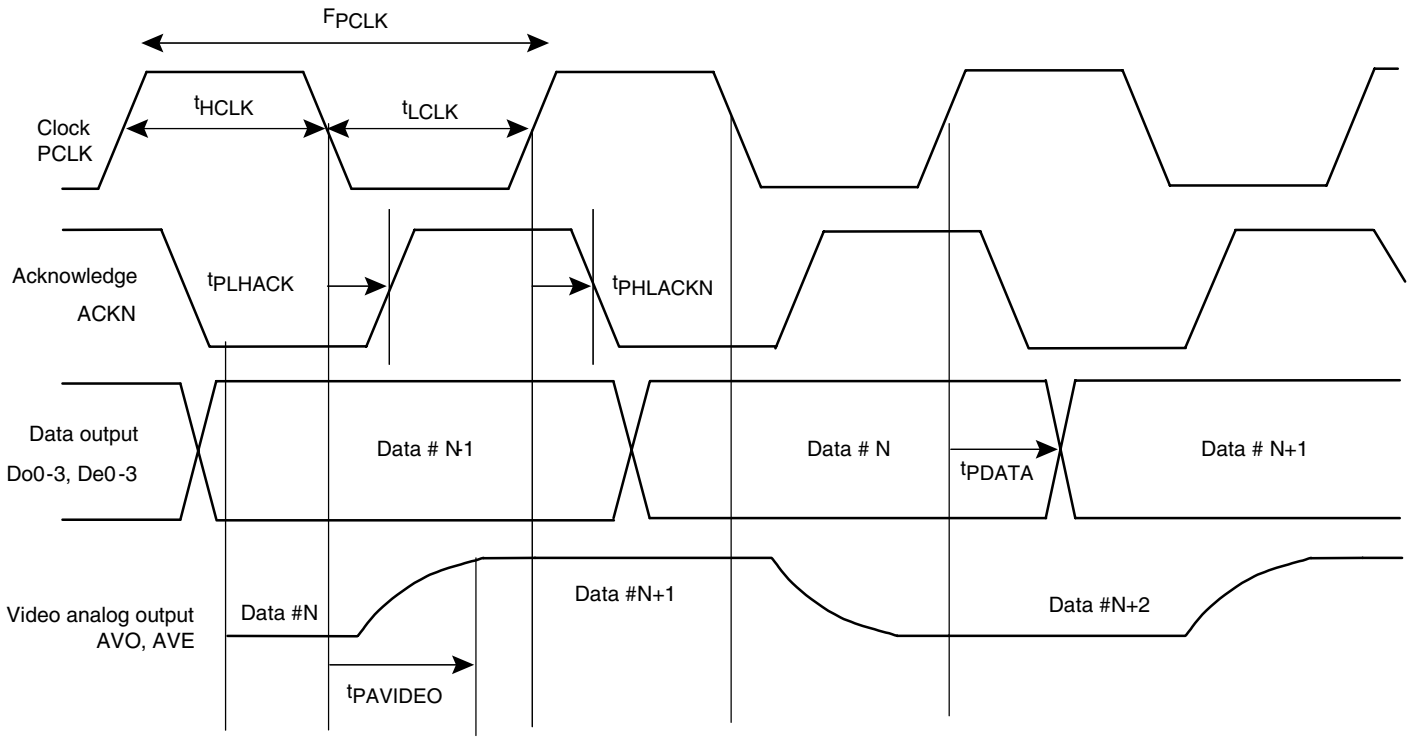

**Figure 4.** Output Enable

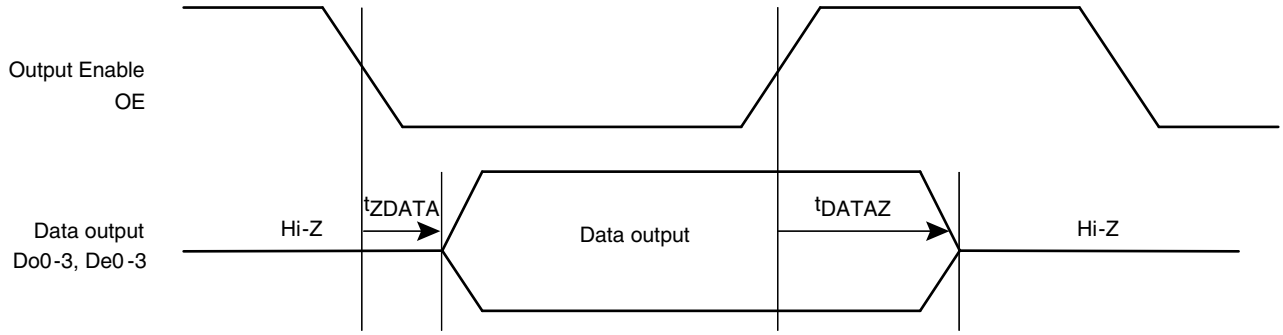


**Figure 5.** No data change

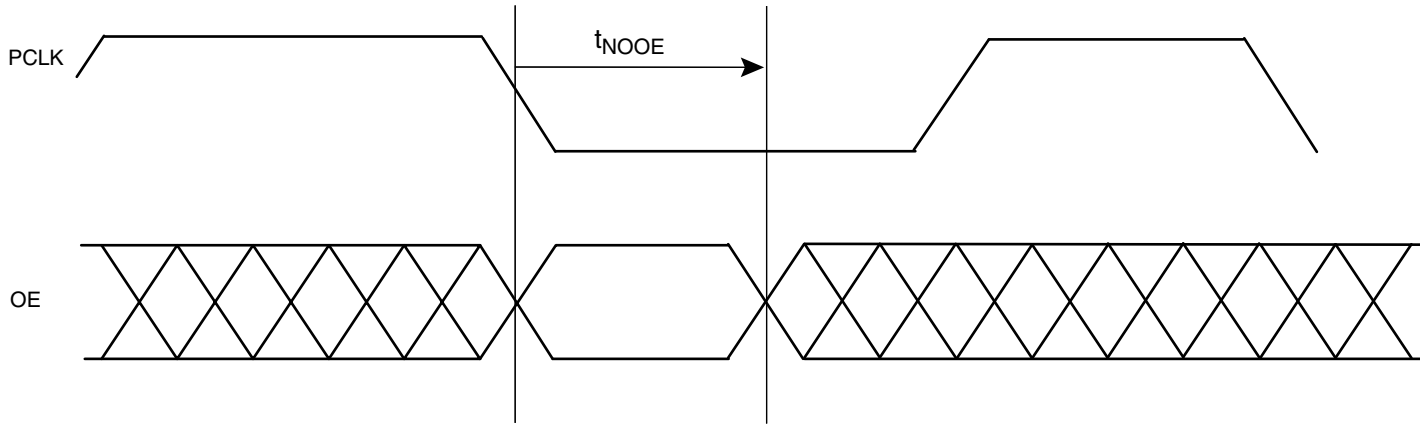


Note: OE must not change during TNOOE after the PCLK falls. This is to ensure that the output drivers of the data is not driving current, to reduce the noise level on the power supply.

**Figure 6.** FCD4B14 Block Diagram

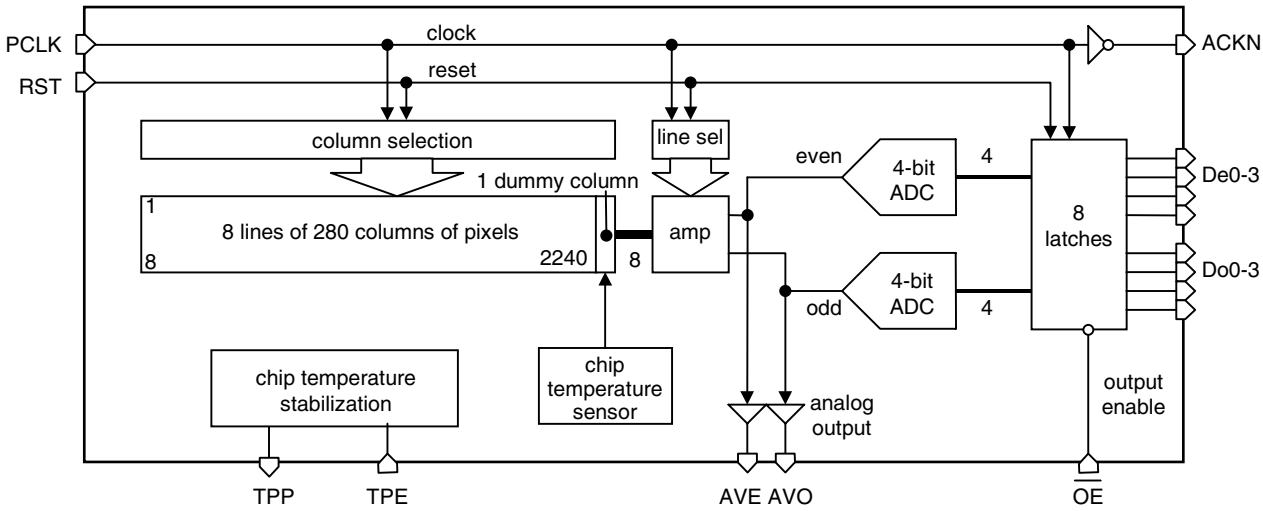


## Functional Description

The circuit is divided into two main sections: sensor and data conversion. One particular column among 280+1 is selected in the sensor array (1), then each pixel of the selected column sends its electrical information to amplifiers (2) (one per line), then two lines at a time are selected (odd and even) so that two particular pixels send their information to the input of two 4-bit Analog-to-Digital Converters (3), so 2 pixels can be read for each clock pulse (4).

**Figure 7.** Functional Description

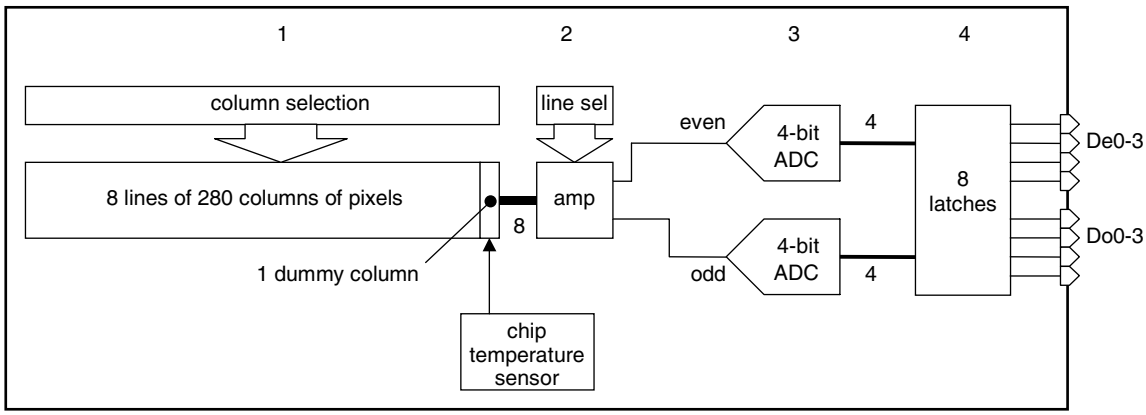


## Sensor

Each pixel is a sensor in itself. The sensor detects a temperature differential between the beginning of acquisition and the reading of information: this is the integration time. The integration time begins with a reset of the pixel to a predefined initial state. Note that the integration time reset has nothing to do with the reset of the digital section.

Then, at a rate depending on the sensitivity of the pyroelectric layer, on the temperature variation between the reset and the end of the integration time, and on the duration of the integration time, electrical charges are generated at the pixel level.

## Analog-to-Digital Converter/ Reconstructing an 8-bit Fingerprint Image

An Analog-to-Digital Converter (ADC) is used to convert the analog signal coming from the pixel into digital data that can be used by a processor.

As the data rate for parallel port and USB is in the range of 1 MB per second and at least a rate of 500 frames per second is needed to reconstruct the image with a fair sweeping speed for the finger, two 4-bit ADCs have been used to output 2 pixels at a time on 1 byte.

## Start Sequence

A reset is not necessary between each frame acquisition!

Start sequence must consist of:

1. Set the RST pin to high
2. Set the RST pin to low
3. Send 4 clock pulses (due to pipe-line)
4. Send clock pulses to skip the first frame

Note that the first frame never contains relevant information because the integration time is not correct.

**Figure 8.** Start Sequence

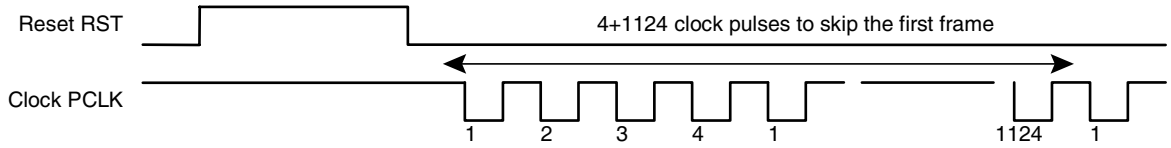


## Reading the Frames

A frame consists of 280 true columns + 1 dummy column of 8 pixels. As two pixels are output at a time, a system must send 281x4 = 1124 clock pulses to read one frame.

Reset must be low when reading the frames.

## Read One Byte/Output Enable

Clock is taken into account on the falling edge and data are output on the rising edge.

For each clock pulse, after the start sequence, a new byte is output on the Do0-3, De0-3 pins. This byte contains 2 pixels: 4-bit on Do0-3 (odd pixels), 4-bit on De0-3 (even pixels).

To output the data, the output enable (OE) pin must be low. When OE is high, the Do0-3 and De0-3 pins are in high impedance state. This enables an easy connection to a microprocessor bus without additional circuitry-it will enable data output by using a chip select signal. Note that the FCD4B14 is always sending data: there is no data exchange to perform using read/write mode.

## Power Supply Noise

IMPORTANT: When a falling edge is applied on OE (i.e when the Output Enable becomes active), then some current is drained from the power supply to drive the 8 outputs, producing some noise. It is important to avoid such noise just after the falling edge of the clock PCLK, when the pixels information is evaluated: the timing diagram figure 5 and time $T_{NOOE}$ defines the interval time where the power supply must be as quiet as possible.

## Video Output

An analog signal is also available on pins AVE and AVO. Note that video output is available one clock pulse before the corresponding digital output (one clock pipe-line delay for the analog to digital conversion).

## Pixel Order

After a reset, pixel number one is located on the upper left corner, looking at the chip with bond pads to the right. For each column of 8 pixels, pixels 1-3-5-7 are output on odd data Do0-3 pins, pixels 2-4-6-8 are output on even data De0-3 pins. Most significant bit is bit #3, least significant is bit #0.

**Figure 9.** Pixel Order

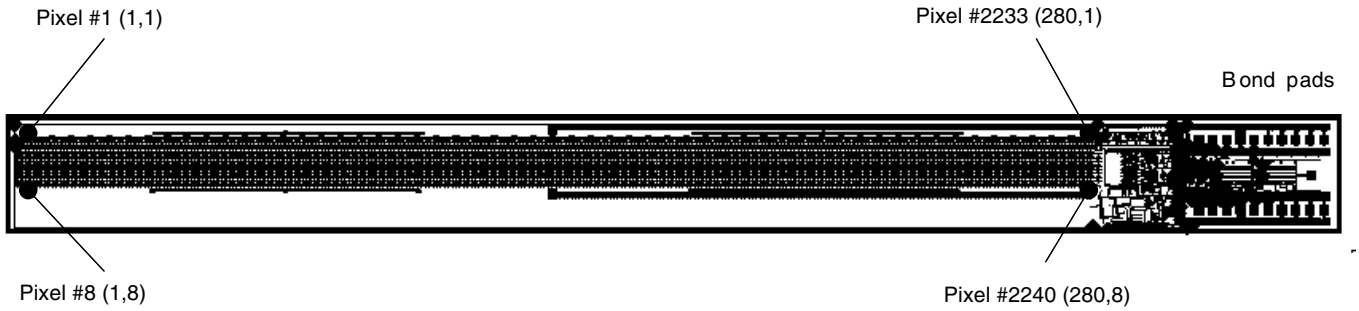


## Synchronization: The Dummy Column

A dummy column has been added to the sensor to act as a specific pattern to detect the first pixel. So, 280 true columns + 1 dummy column are read for each frame.

The 4 bytes of the dummy column contain a fixed pattern on the two first bytes, and temperature information on the last two bytes.

| Dummy Byte | Odd | Even |
|---|---|---|
| Dummy Byte 1 DB1: | 111X | 0000 |
| Dummy Byte 2 DB2: | 111X | 0000 |
| Dummy Byte 3 DB3: | rrrr | nnnn |
| Dummy Byte 4 DB4: | tttt | pppp |

Note: x represents 0 or 1

The sequence 111X0000 111X0000 appears on every frame (exactly every 1124 clock pulses), so it is an easy pattern to recognize for synchronization purposes.

## Thermometer

The dummy bytes DB3 and DB4 contains some internal and temperature information.

The even nibble nnnn in DB3 can be used to measure an increase (or decrease) of the chip temperature, using the difference between two measures of the same physical device. The following table gives values in Kelvin.

| nnnn Decimal | nnnn Binary | Temperature differential with code 8 in Kelvin |
|---|---|---|
| 15 | 1111 | 11.2 |
| 14 | 1110 | 8.4 |
| 13 | 1101 | 7 |
| 12 | 1100 | 5.6 |
| 11 | 1011 | 4.2 |
| 10 | 1010 | 2.8 |
| 9 | 1001 | 1.4 |
| 8 | 1000 | 0 |
| 7 | 0111 | -1.4 |
| 6 | 0110 | -2.8 |
| 5 | 0101 | -4.2 |
| 4 | 0100 | -5.6 |
| 3 | 0011 | -7 |
| 2 | 0010 | -8.4 |
| 1 | 0001 | -11.2 |
| 0 | 0000 | < -16.8 |

For code 0 and 15, the absolute value is a minimum (saturation).

When the image contrast becomes low because of a low temperature difference between the finger and the sensor, it is recommended to use the temperature stabilization circuitry to increase the temperature of two codes (i.e. from 8 to 10), to get at least an increase >1.4 Kelvin of the sensor. This enables to recover enough contrast to get a proper fingeprint for recognition purpose.

## Integration Time and Clock Jitter

The FCD4B14 is not very sensitive to clock jitter (clock variation). The most important requirement is a regular integration time that ensures the frame reading rate is also as regular as possible, in order to get consistent fingerprint slices.

If the integration time is not regular, contrast will vary from one frame to another.

Note that it is possible to introduce some waiting time between each set of 1124 clock pulses, but the overall time of one frame read must be regular. This waiting time is generally the time needed by the processor to perform some calculation over the frame (to detect the finger, for instance).

**Figure 10.** Read One Frame

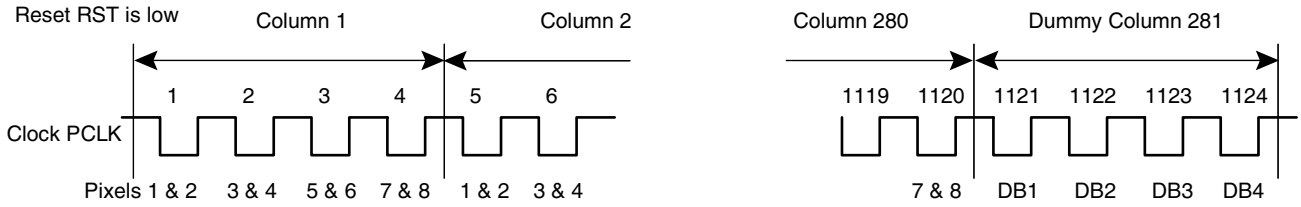


**Figure 11.** Regular Integration Time

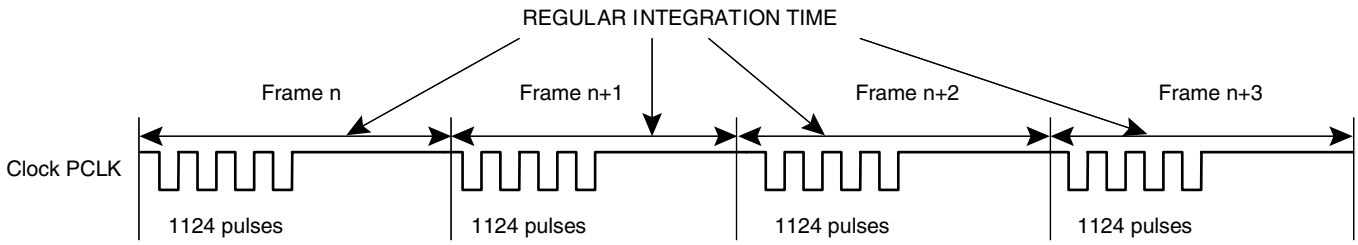

## Power Management

### Nap Mode

Several strategies are possible to reduce power consumption when not in use.

The simplest and most efficient is to cut the power supply, using external means.

A nap mode is also implemented in the FCD4B14. To activate this nap mode, user must:

1. Set the reset RST pin to high. Doing this, all analog sections of the device are internally powered down.
2. Set the clock PCLK pin to high (or low), thus stopping the entire digital section.
3. Set the TPE pin to low or disconnect TPP to stop the temperature stabilization feature.
4. Set Output Enable OE pin to high, so that output are forced in HiZ.

**Figure 12.** Nap Mode

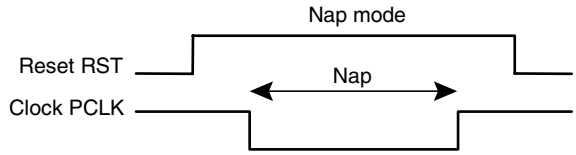


In Nap Mode, all internal transistors are in shut mode. Only leakage current is drained in power supply, generally less than the tested value.

### Static Current Consumption

When the clock is stopped (set to 1) and the reset is low (set to 0), the analog sections of the device drain some current and the digital section does not consume current if the outputs are connected to a standard CMOS input (= no current is drained in the I/O). In this case the typical current value is 5 mA. This current does not depend on the voltage (i.e. it is almost the same from 3V to 5.5V).

### Dynamic Current Consumption

When the clock is running, the digital sections are consuming current, and particularly the outputs if they are heavily loaded. In any case, it should be less than the testing machine (120 pF load on each I/O), 50 pF maximum is recommended.

Connected to a USB interface chip (see application note 26 related to the FCDEMO4 kit) at 5V, and running at about 1 MHz, the FCD4B14 consumes less than 7 mA on VCC pin.

### Temperature Stabilization Power Consumption (TPP pin)

When the TPE pin is set to 1, current is drained via the TPP pin. The current is limited by the internal equivalent resistance given in table 4 and a possible external resistor.

Most of the time, TPE is set to 0 and no current is drained in TPP. When the image contrast becomes low because of a low temperature differential (less than one Kelvin), then it is recommended to set TPE to 1 during a short time so that the dissipated power in the chip elevates the temperature, enabling to recover contrast. The necessary time to increase the chip temperature of one Kelvin depends on the dissipated power, the thermal capacity of the silicon sensor and the thermal resistance between the sensor and the surroundings.

As a rule of thumb, dissipating 300 mW in the chip elevates the temperature of 1 Kelvin in one second. With the 30 Ω typical value, 300 mW is 3V applied on TPP.

## Packaging:
## Mechanical Data

**Figure 13.** COB: Top View (all dimensions in mm)

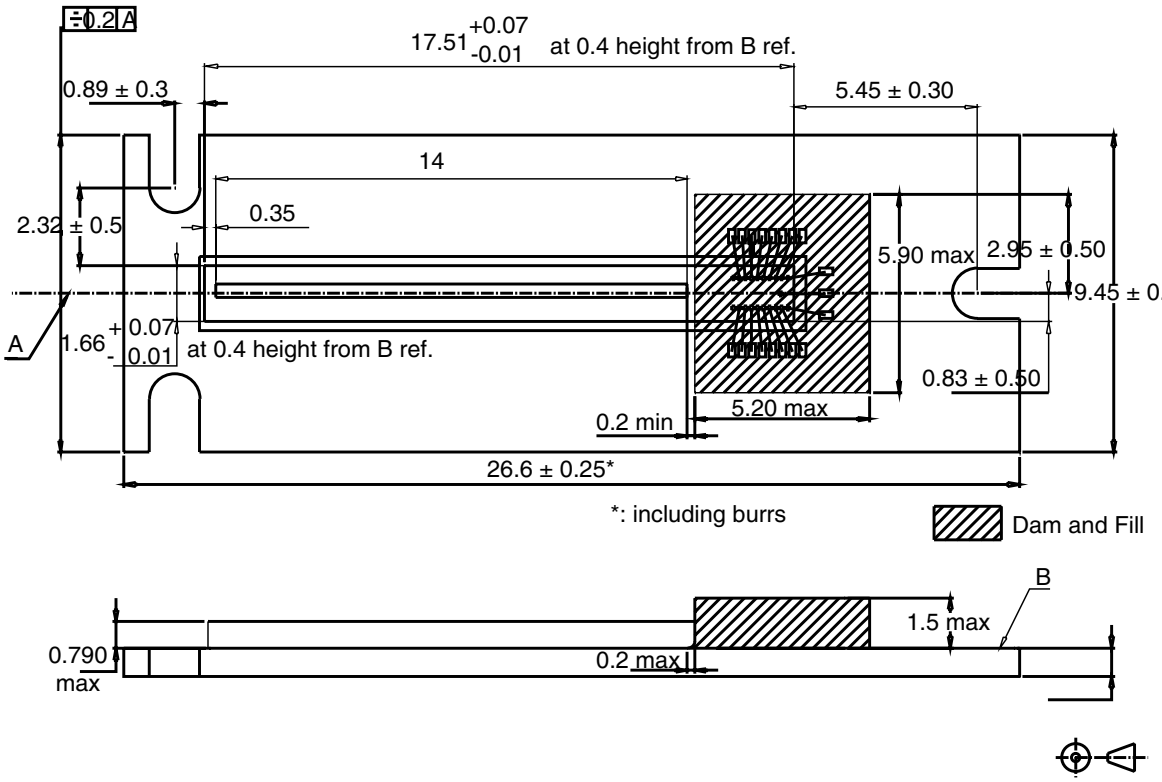


**Figure 14.** COB: Bottom View (all dimensions in mm)

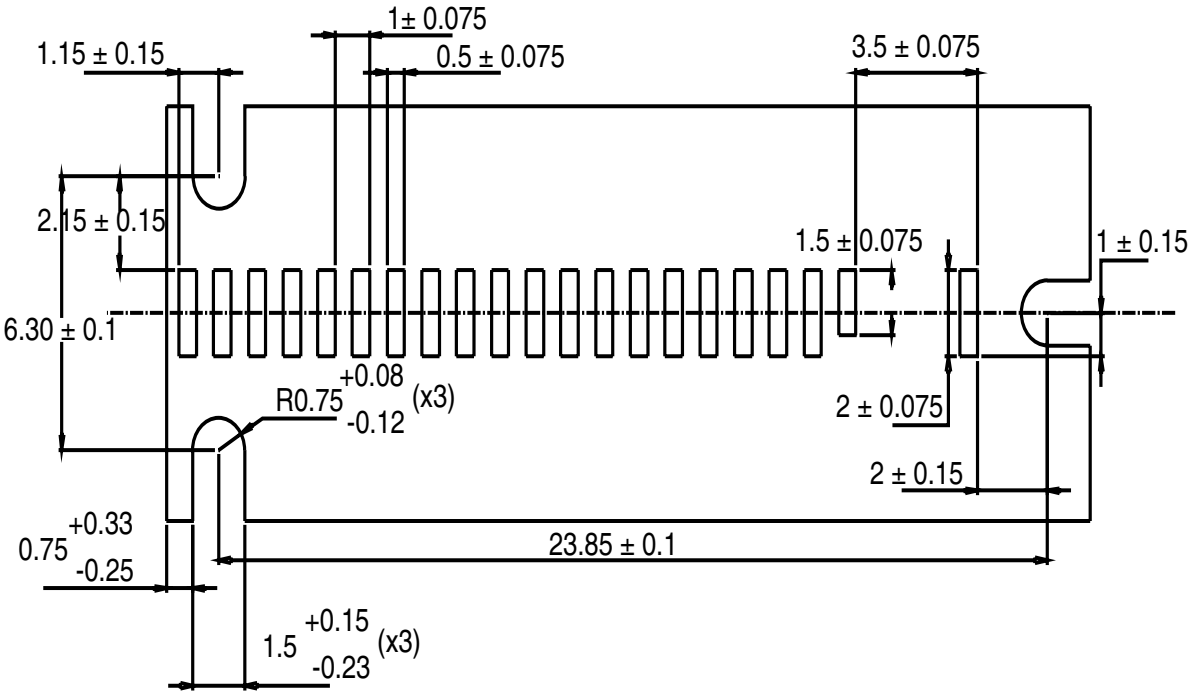

**Figure 15.** DIL Package (all dimensions in mm)

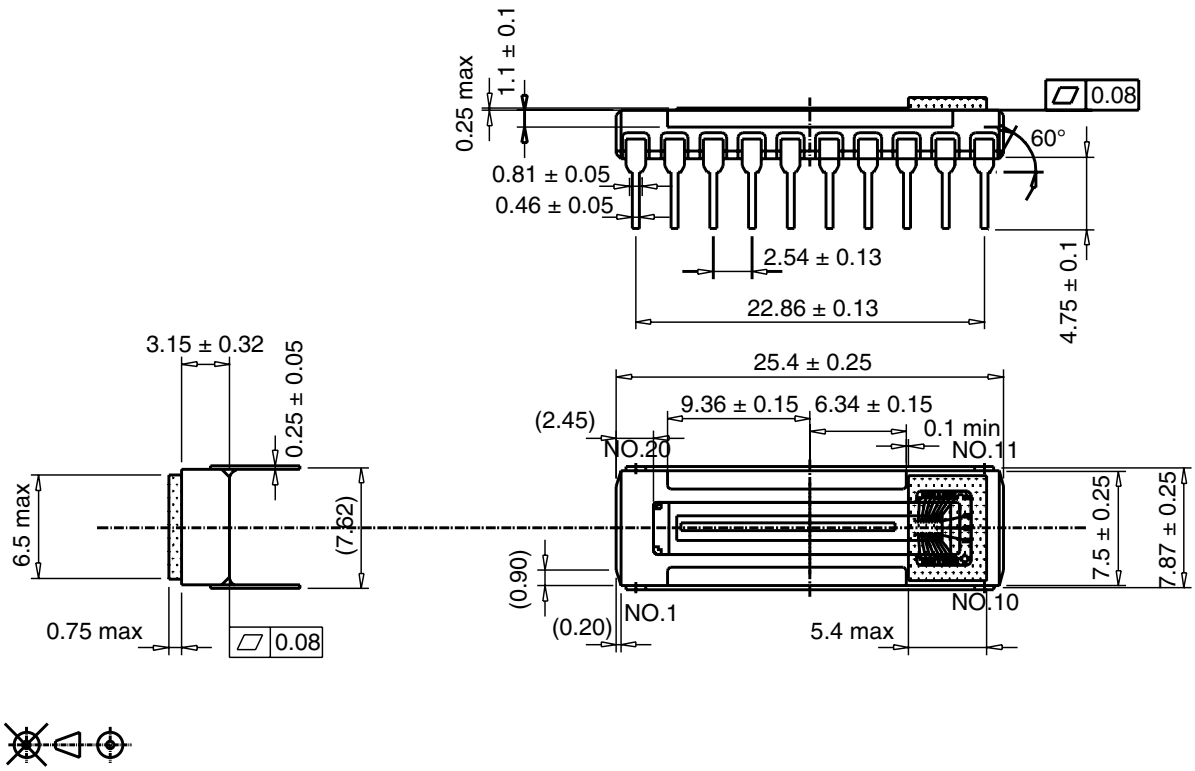

# Ordering Information

## Package Device

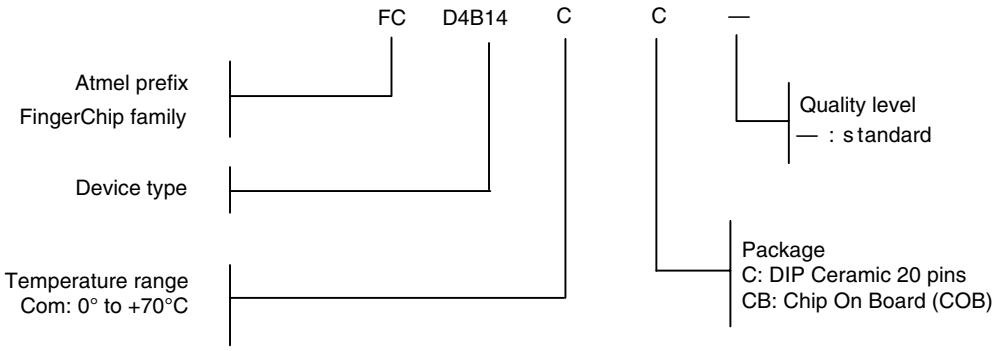

## Atmel Headquarters

*Corporate Headquarters*
2325 Orchard Parkway
San Jose, CA 95131
TEL 1(408) 441-0311
FAX 1(408) 487-2600

*Europe*
Atmel SarL
Route des Arsenaux 41
Casa Postale 80
CH-1705 Fribourg
Switzerland
TEL (41) 26-426-5555
FAX (41) 26-426-5500

*Asia*
Atmel Asia, Ltd.
Room 1219
Chinachem Golden Plaza
77 Mody Road Tsimhatsui
East Kowloon
Hong Kong
TEL (852) 2721-9778
FAX (852) 2722-1369

*Japan*
Atmel Japan K.K.
9F, Tonetsu Shinkawa Bldg.
1-24-8 Shinkawa
Chuo-ku, Tokyo 104-0033
Japan
TEL (81) 3-3523-3551
FAX (81) 3-3523-7581

## Atmel Operations

*Memory*
Atmel Corporate
2325 Orchard Parkway
San Jose, CA 95131
TEL 1(408) 436-4270
FAX 1(408) 436-4314

*Microcontrollers*
Atmel Corporate
2325 Orchard Parkway
San Jose, CA 95131
TEL 1(408) 436-4270
FAX 1(408) 436-4314

Atmel Nantes
La Chantrerie
BP 70602
44306 Nantes Cedex 3, France
TEL (33) 2-40-18-18-18
FAX (33) 2-40-18-19-60

*ASIC/ASSP/Smart Cards*
Atmel Rousset
Zone Industrielle
13106 Rousset Cedex, France
TEL (33) 4-42-53-60-00
FAX (33) 4-42-53-60-01

Atmel Colorado Springs
1150 East Cheyenne Mtn. Blvd.
Colorado Springs, CO 80906
TEL 1(719) 576-3300
FAX 1(719) 540-1759

Atmel Smart Card ICs
Scottish Enterprise Technology Park
Maxwell Building
East Kilbride G75 0QR, Scotland
TEL (44) 1355-803-000
FAX (44) 1355-242-743

*RF/Automotive*
Atmel Heilbronn
Theresienstrasse 2
Postfach 3535
74025 Heilbronn, Germany
TEL (49) 71-31-67-0
FAX (49) 71-31-67-2340

Atmel Colorado Springs
1150 East Cheyenne Mtn. Blvd.
Colorado Springs, CO 80906
TEL 1(719) 576-3300
FAX 1(719) 540-1759

*Biometrics/Imaging/Hi-Rel MPU/*
*High Speed Converters/RF Datacom*
Atmel Grenoble
Avenue de Rochepleine
BP 123
38521 Saint-Egreve Cedex, France
TEL (33) 4-76-58-30-00
FAX (33) 4-76-58-34-80

---

*e-mail*
literature@atmel.com

*Web Site*
http://www.atmel.com

**© Atmel Corporation 2002.**
Atmel Corporation makes no warranty for the use of its products, other than those expressly contained in the Company's standard warranty which is detailed in Atmel's Terms and Conditions located on the Company's web site. The Company assumes no responsibility for any errors which may appear in this document, reserves the right to change devices or specifications detailed herein at any time without notice, and does not make any commitment to update the information contained herein. No licenses to patents or other intellectual property of Atmel are granted by the Company in connection with the sale of Atmel products, expressly or by implication. Atmel's products are not authorized for use as critical components in life support devices or systems.

ATMEL® is the registered trademarks of Atmel.

Other terms and product names may be the trademarks of others.

1962C–01/02/xM