IEC Inlet with Line Filter



- IEC320-C14 Filtered Inlet
- Screw Mount & Snap-in Versions
- Compact Design
- ITE Applications
- 1, 3, 6 & 10A Rating
- 6.3 x 0.8mm Faston Terminals
- Bleed Resistor
- Shielded Metal Body
- Wide Operating Temperature Range
- 3 Year Warranty

The FASA combines an EMI filter with an IEC320-C14 inlet, to provide excellent attenuation in a compact module. They are available as either snap-in (FASASxxPFR) or screw mount (FASASxxSFR) for consumer, commercial, ITE & instrumentation type applications. When fitted to mains powered equipment, they provide excellent attenuation to conducted electro-magnetic interference from the mains supply, whilst reducing any conducted emissions from within the equipment onto the mains supply. Suitable for class I appliances, all models feature a shielded metal body, and are fitted with a bleed resistor to safely discharge the filter capacitors when power is disconnected. Safety approvals are EN60939-2 for passive filters & ANSI/UL1283 for EMI filters. They feature a wide operating temperature range of -40°C to +110°C with full power operation up to +50°C.

Specifications

Characteristics	Minimum	Typical	Maximum	Units	Notes and Conditions
Input Voltage	0	115/230	264	VAC	
Input Frequency	DC		400	Hz	
Rated Current	1		10	A	See models and ratings table
Earth Leakage Current	0.25		0.48	mA	See models and ratings table
MTBF	1.75			MHrs	MIL-STD 217F
Flammability Rating	UL94V-2				
Temperature Operating	-40		110	°C	See derating curve
Safety Approvals	EN60939-2				Passive filter units for EMI suppression
	ANSI/UL1283				Electromagnetic Interference Filters
Terminals	Faston 6.3 x 0.8mm straight				
Protection Class	Suitable for appliances with protection Class I				
Dielectric Strength		1500		VAC	

Electrical Schematic

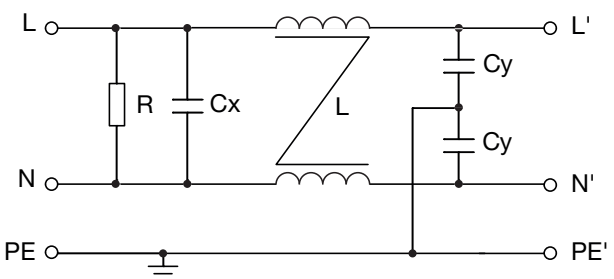

Models & Ratings

Rated Current at 50 °C	Leakage Current		Inductance at 10 kHz, 0.25 V L	Capacitance		Resistance	Weight	Application	Mounting	Filter
	115 VAC/ 60 Hz	250 VAC/ 50 Hz		Cx	Cy					
1 A	0.25 mA	0.45 mA	2 x 6.5 mH	0.1 µF	2.2 nF	1 MΩ	38 g	ITE	Screw	FASAS01SFR
3 A	0.25 mA	0.45 mA	2 x 2.5 mH	0.1 µF	2.2 nF	1 MΩ	37 g	ITE	Screw	FASAS03SFR
6 A	0.25 mA	0.45 mA	2 x 0.8 mH	0.1 µF	2.2 nF	1 MΩ	39 g	ITE	Screw	FASAS06SFR
10 A	0.25 mA	0.45 mA	2 x 0.2 mH	0.1 µF	2.2 nF	1 MΩ	39 g	ITE	Screw	FASAS10SFR
1 A	0.25 mA	0.45 mA	2 x 6.5 mH	0.1 µF	2.2 nF	1 MΩ	39 g	ITE	Snap-In	FASAS01PFR
3 A	0.25 mA	0.45 mA	2 x 2.5 mH	0.1 µF	2.2 nF	1 MΩ	39 g	ITE	Snap-In	FASAS03PFR
6 A	0.25 mA	0.45 mA	2 x 0.8 mH	0.1 µF	2.2 nF	1 MΩ	41 g	ITE	Snap-In	FASAS06PFR
10 A	0.25 mA	0.45 mA	2 x 0.2 mH	0.1 µF	2.2 nF	1 MΩ	41 g	ITE	Snap-In	FASAS10PFR

Thermal Derating

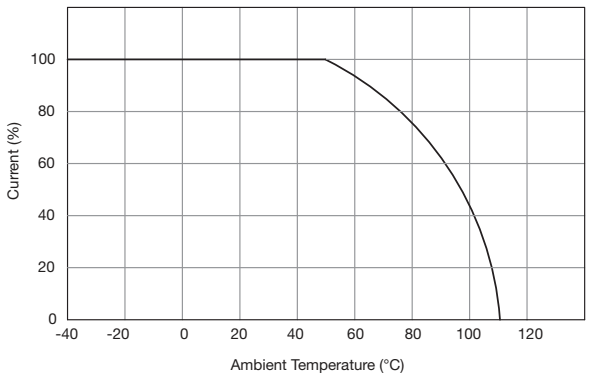

Mechanical Details

All dimensions in inches (mm)

Screw Mount

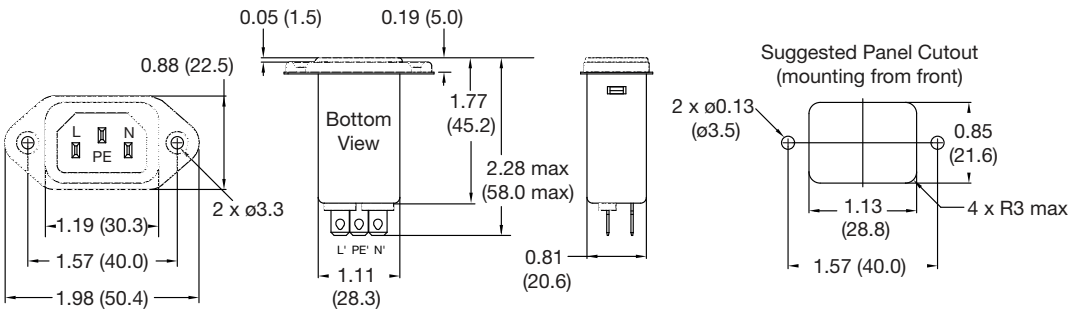

Snap-In Mount

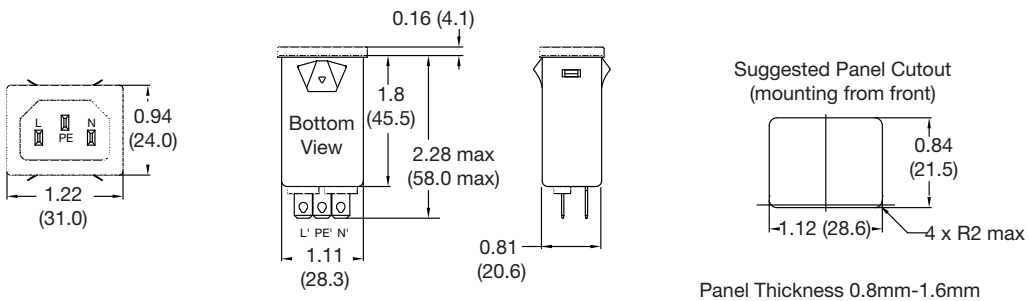

Typical Attenuation Curves

Per CISPR 17, 50 Ω system

——————— Asymmetrical (Common Mode)

- - - - - - - - - - - - - - - - Symmetrical (Differential Mode)

FASAS01SFR/PFR

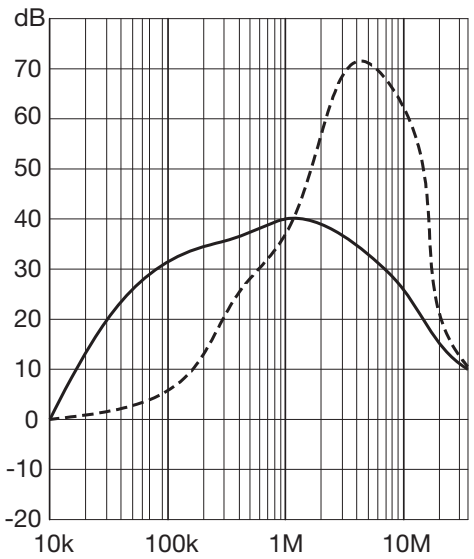

FASAS03SFR/PFR

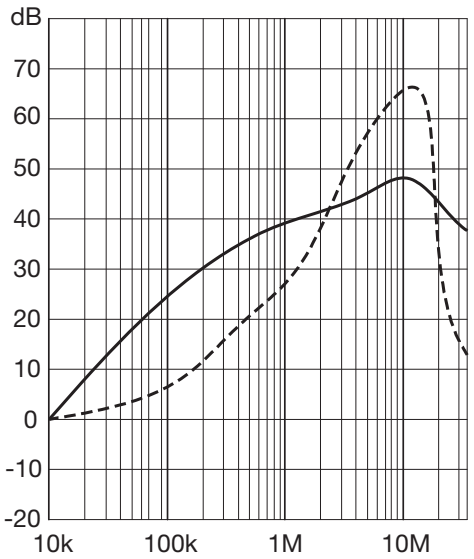

FASAS06SFR/PFR

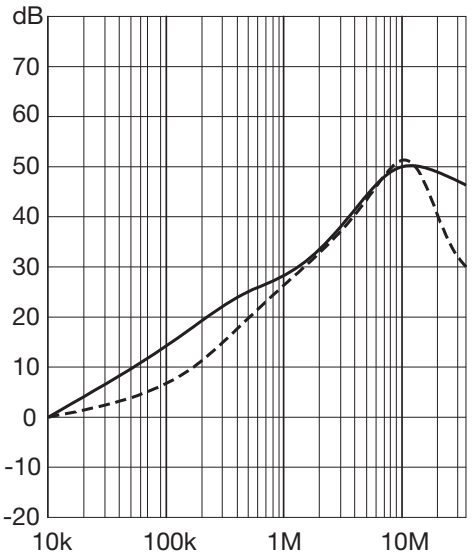

FASAS10SFR/PFR

