December 2007

FAN7311
LCD Backlight Inverter Drive IC

Features

- High-Efficiency Single-Stage Power Conversion
- Wide Input Voltage Range: 5V to 25.5V
- Backlight Lamp Ballast and Soft Dimming
- Reduced Number of Required External Components
- Precision Voltage Reference Trimmed to 2%
- ZVS Full-Bridge Topology
- Soft-Start Capability
- PWM Control at Fixed Frequency
- Analog and Burst Dimming Function
- Programmable Striking Frequency
- Open-Lamp Protection
- Open-Lamp Regulation
- 20-Pin SSOP/SOIC/DIP

Applications

- LCD TV
- LCD Monitor

Description

The FAN7311 provides all the control functions for a series parallel resonant converter as well as a pulse width modulation (PWM) controller to develop a supply voltage. Typical operating frequency range is between 30kHz and 250kHz, depending on the cold cathode fluorescent lamp (CCFL) and the transformer's characteristics. FAN7311 uses a new patented phase-shift control.

20-SSOP



20-SOIC

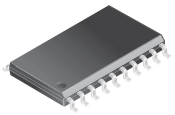

20-DIP

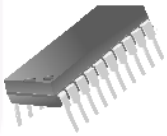

Ordering Information

Part Number	Package	Operating Temperature Range	Packing Method
FAN7311G	20-SSOP	-25°C to 85°C	Rail
FAN7311GX	20-SSOP		Tape & Reel
FAN7311M	20-SOIC		Rail
FAN7311MX	20-SOIC		Tape & Reel
FAN7311N	20-DIP		Rail

All packages are lead free per JEDEC: J-STD-020B standard.

Protected by U.S. Patent: 5,652,479; 7,158,390.

© 2006 Fairchild Semiconductor Corporation

Typical Application Circuits

Application	Lamps	Input Voltage
19-inch LCD Monitor	4	13V

1. Schematic

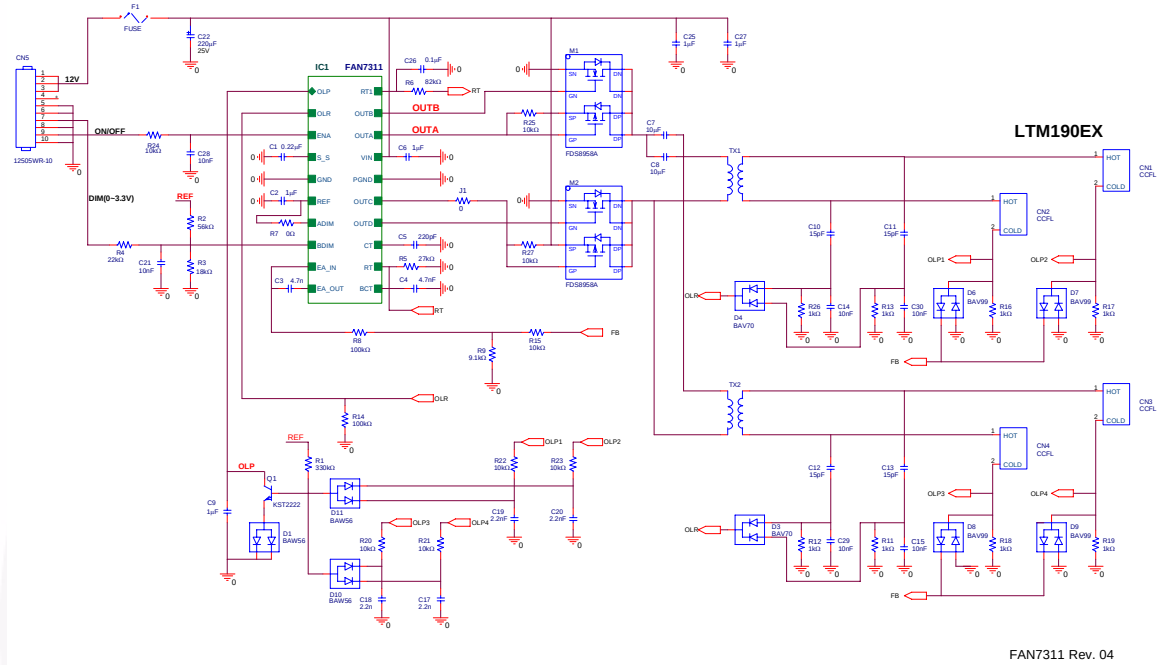

Figure 10. Typical Application Circuit

2. Transformer Schematic Diagram

- Supported by Namyang electronics (http://www.namyangelec.co.kr)

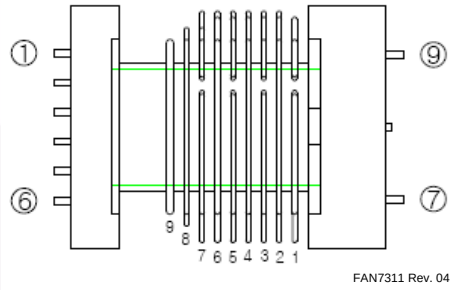

Figure 11. Transformer Schematic

3. Core & Bobbin

- Core: EFD2124
- Material: PL7
- Bobbin: EFE2124

4. Winding Specification

Pin No.	Wire	Turns	Inductance	Leakage Inductance	Remarks
5 --> 2	1 UEW 0.45 ϕ	19	115 µH	21.5µH	1KHz, 1V
7 --> 9	1 UEW 0.04 ϕ	2300	1.5 H	280mH	1KHz, 1V

© 2006 Fairchild Semiconductor Corporation

FAIRCHILD SEMICONDUCTOR®

TRADEMARKS

The following includes registered and unregistered trademarks and service marks, owned by Fairchild Semiconductor and/or its global subsidiaries, and is not intended to be an exhaustive list of all such trademarks.

ACEx®
Build it Now™
CorePLUS™
CROSSVOLT™
CTL™
Current Transfer Logic™
EcoSPARK®
EZSWITCH™ *
™
®
Fairchild®
Fairchild Semiconductor®
FACT Quiet Series™
FACT®
FAST®
FastvCore™
FlashWriter®*
FPS™
FRFET®
Global Power Resource℠
Green FPS™
Green FPS™ e-Series™
GTO™
i-Lo™
IntelliMAX™
ISOPLANAR™
MegaBuck™
MICROCOUPLER™
MicroFET™
MicroPak™
MillerDrive™
Motion-SPM™
OPTOLOGIC®
OPTOPLANAR®
®
PDP-SPM™
Power220®
Power247®
POWEREDGE®
Power-SPM™
PowerTrench®
Programmable Active Droop™
QFET®
QS™
QT Optoelectronics™
Quiet Series™
RapidConfigure™
SMART START™
SPM®
STEALTH™
SuperFET™
SuperSOT™-3
SuperSOT™-6
SuperSOT™-8
SyncFET™
SYSTEM GENERAL ®
The Power Franchise®
the power franchise
TinyBoost™
TinyBuck™
TinyLogic®
TINYOPTO™
TinyPower™
TinyPWM™
TinyWire™
µSerDes™
UHC®
Ultra FRFET™
UniFET™
VCX™

* EZSWITCH™ and FlashWriter® are trademarks of System General Corporation, used under license by Fairchild Semiconductor.

DISCLAIMER

FAIRCHILD SEMICONDUCTOR RESERVES THE RIGHT TO MAKE CHANGES WITHOUT FURTHER NOTICE TO ANY PRODUCTS HEREIN TO IMPROVE RELIABILITY, FUNCTION, OR DESIGN. FAIRCHILD DOES NOT ASSUME ANY LIABILITY ARISING OUT OF THE APPLICATION OR USE OF ANY PRODUCT OR CIRCUIT DESCRIBED HEREIN; NEITHER DOES IT CONVEY ANY LICENSE UNDER ITS PATENT RIGHTS, NOR THE RIGHTS OF OTHERS. THESE SPECIFICATIONS DO NOT EXPAND THE TERMS OF FAIRCHILD'S WORLDWIDE TERMS AND CONDITIONS, SPECIFICALLY THE WARRANTY THEREIN, WHICH COVERS THESE PRODUCTS.

LIFE SUPPORT POLICY

FAIRCHILD'S PRODUCTS ARE NOT AUTHORIZED FOR USE AS CRITICAL COMPONENTS IN LIFE SUPPORT DEVICES OR SYSTEMS WITHOUT THE EXPRESS WRITTEN APPROVAL OF FAIRCHILD SEMICONDUCTOR CORPORATION.

As used herein:

1. Life support devices or systems are devices or systems which, (a) are intended for surgical implant into the body or (b) support or sustain life, and (c) whose failure to perform when properly used in accordance with instructions for use provided in the labeling, can be reasonably expected to result in a significant injury of the user.
2. A critical component in any component of a life support, device, or system whose failure to perform can be reasonably expected to cause the failure of the life support device or system, or to affect its safety or effectiveness.

PRODUCT STATUS DEFINITIONS

Definition of Terms

Datasheet Identification	Product Status	Definition
Advance Information	Formative or In Design	This datasheet contains the design specifications for product development. Specifications may change in any manner without notice.
Preliminary	First Production	This datasheet contains preliminary data; supplementary data will be published at a later date. Fairchild Semiconductor reserves the right to make changes at any time without notice to improve design.
No Identification Needed	Full Production	This datasheet contains final specifications. Fairchild Semiconductor reserves the right to make changes at any time without notice to improve the design.
Obsolete	Not In Production	This datasheet contains specifications on a product that has been discontinued by Fairchild Semiconductor. The datasheet is printed for reference information only.

Rev. I32

© 2006 Fairchild Semiconductor Corporation