

Is Now Part of



ON Semiconductor®

To learn more about ON Semiconductor, please visit our website at
www.onsemi.com

Please note: As part of the Fairchild Semiconductor integration, some of the Fairchild orderable part numbers will need to change in order to meet ON Semiconductor's system requirements. Since the ON Semiconductor product management systems do not have the ability to manage part nomenclature that utilizes an underscore (_), the underscore (_) in the Fairchild part numbers will be changed to a dash (-). This document may contain device numbers with an underscore (_). Please check the ON Semiconductor website to verify the updated device numbers. The most current and up-to-date ordering information can be found at www.onsemi.com. Please email any questions regarding the system integration to Fairchild_questions@onsemi.com.

ON Semiconductor and the ON Semiconductor logo are trademarks of Semiconductor Components Industries, LLC dba ON Semiconductor or its subsidiaries in the United States and/or other countries. ON Semiconductor owns the rights to a number of patents, trademarks, copyrights, trade secrets, and other intellectual property. A listing of ON Semiconductor's product/patent coverage may be accessed at www.onsemi.com/site/pdf/Patent-Marking.pdf. ON Semiconductor reserves the right to make changes without further notice to any products herein. ON Semiconductor makes no warranty, representation or guarantee regarding the suitability of its products for any particular purpose, nor does ON Semiconductor assume any liability arising out of the application or use of any product or circuit, and specifically disclaims any and all liability, including without limitation special, consequential or incidental damages. Buyer is responsible for its products and applications using ON Semiconductor products, including compliance with all laws, regulations and safety requirements or standards, regardless of any support or applications information provided by ON Semiconductor. "Typical" parameters which may be provided in ON Semiconductor data sheets and/or specifications can and do vary in different applications and actual performance may vary over time. All operating parameters, including "Typicals" must be validated for each customer application by customer's technical experts. ON Semiconductor does not convey any license under its patent rights nor the rights of others. ON Semiconductor products are not designed, intended, or authorized for use as a critical component in life support systems or any FDA Class 3 medical devices or medical devices with a same or similar classification in a foreign jurisdiction or any devices intended for implantation in the human body. Should Buyer purchase or use ON Semiconductor products for any such unintended or unauthorized application, Buyer shall indemnify and hold ON Semiconductor and its officers, employees, subsidiaries, affiliates, and distributors harmless against all claims, costs, damages, and expenses, and reasonable attorney fees arising out of, directly or indirectly, any claim of personal injury or death associated with such unintended or unauthorized use, even if such claim alleges that ON Semiconductor was negligent regarding the design or manufacture of the part. ON Semiconductor is an Equal Opportunity/Affirmative Action Employer. This literature is subject to all applicable copyright laws and is not for resale in any manner.

FAIRCHILD SEMICONDUCTOR®

March 2013

FAN4147
Ground Fault Interrupter

Features

- For GFCI and RCD Applications
- Precision Sense Amplifier and Bandgap Reference
- Built-in AC Rectifier
- Built-in Noise Filter
- Low-Voltage SCR Disable
- Direct DC Coupled to Sense Coil
- SCR Gate Driver
- Adjustable Sensitivity
- 400μA Quiescent Current
- Minimum External Components
- Meets UL 943 Requirements
- Ideal for 120V or 220V Systems
- Space Saving SuperSOT™ 6-Pin Package

Applications

- GFCI Output Receptacles
- GFCI Circuit Breakers
- Portable GFCI Cords

Description

The FAN4147 is a low-power Ground Fault Interrupter (GFI) controller for detecting hazardous current paths to ground and ground-to-neutral faults. The FAN4147 application circuit opens the load contacts before a harmful shock occurs.

Internally, the FAN4147 contains a diode rectifier, precision bandgap 12V shunt regulator, precision low-V_{OS} offset-sense amplifier, time delay noise filter, window-detection comparators, and an SCR driver. With a minimum number of external components, the FAN4147 detects and protects against a hot-wire-to-ground fault and a neutral-line-to-neutral-load short. The minimal components and the small SuperSOT™ package allow for a small-form-factor, low-cost solution.

The FAN4147 circuitry has a built-in rectifier and shunt regulator that operates with a low quiescent current. This allows for a high-value, low-wattage-series supply resistor. The internal temperature-compensated shunt regulator, sense amplifier, and bias circuitry provide for precision ground-fault detection. The low-V_{OS} offset-sense amplifier allows direct coupling of the sense coil to the amplifier's feedback signal. This eliminates the large 50/60Hz AC-coupling capacitor. The internal delay filter rejects high-frequency noise spikes common with inductive loads. This decreases false nuisance tripping. The internal SCR driver is temperature compensated and designed to satisfy the current requirements for a wide selection of external SCRs.

The minimum number of external components and the 6-pin SuperSOT™ package enable a low-cost, compact design and layout.

Ordering Information

Part Number	Operating Temperature Range	Package	Packing Method
FAN4147SX	-35°C to +85°C	6-Lead SUPERSOT6, JEDEC M0-193, 1.6mm	Tape and Reel

© 2010 Fairchild Semiconductor Corporation

Block Diagram

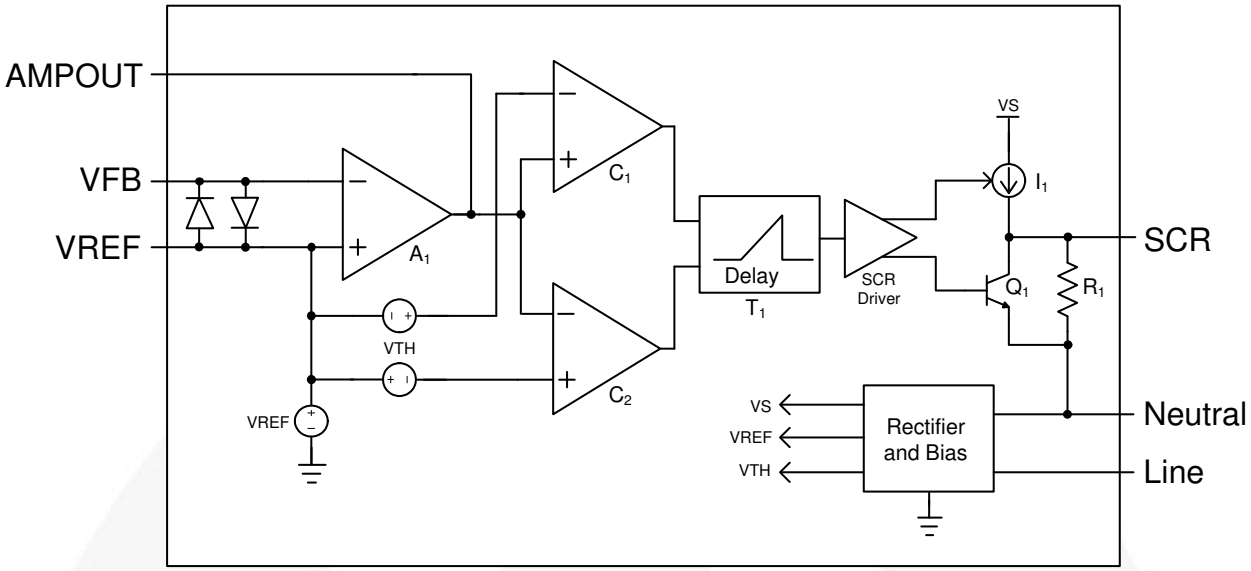

Figure 1. Block Diagram

Typical Application

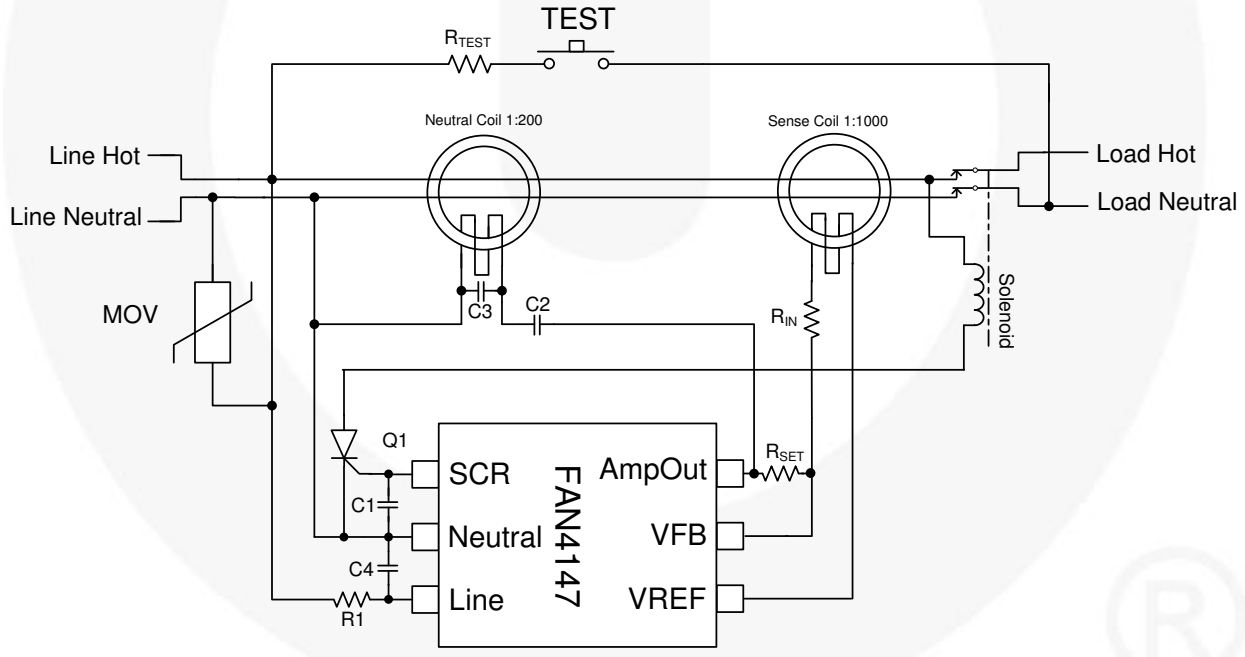

Figure 2. Typical Application(1)

Typical Values

R1: 91KΩ	R_{SET}: 511KΩ (2)	C1: 22nF	C3=1nF
R_{TEST}: 15KΩ	R_{IN}: 470Ω	C2: 10nF	C4=10nF

Notes:
1. Contact Fairchild for best application practices for nuisance tripping rejection.
2. Exact values depend on sense coil characteristics and application.

© 2010 Fairchild Semiconductor Corporation

Pin Configuration

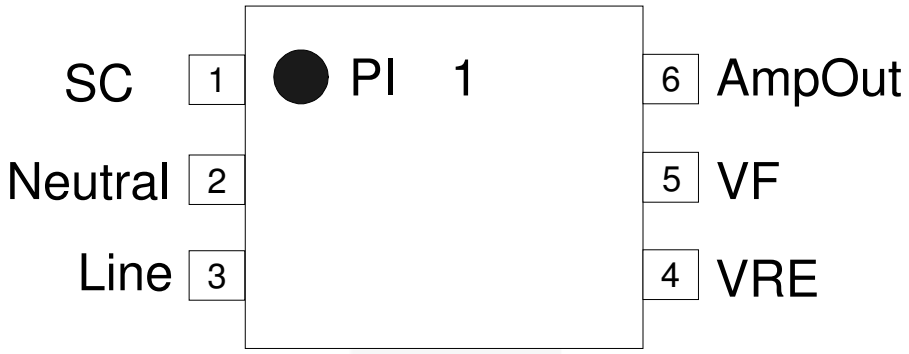

Figure 3. Pin Configuration

Pin Definitions

Pin #	Name	Description
1	SCR	Gate drive for external SCR
2	Neutral	Supply input for FAN4147 circuitry
3	Line	Supply input for FAN4147 circuitry
4	VREF	Non-inverting input for current-sense amplifier
5	VFB	Inverting input for current-sense amplifier
6	AmpOut	An external resistor connected to the VFB pin sets the I_{fault} sensitivity threshold

© 2010 Fairchild Semiconductor Corporation

Absolute Maximum Ratings

Stresses exceeding the absolute maximum ratings may damage the device. The device may not function or be operable above the recommended operating conditions and stressing the parts to these levels is not recommended. In addition, extended exposure to stresses above the recommended operating conditions may affect device reliability. The absolute maximum ratings are stress ratings only.

Symbol	Parameter		Min.	Max.	Unit
I_{CC}	Continuous Supply Current, Line to Neutral			15	mA
V_{CC}	Continuous Supply Voltage, Line to Neutral		-1.2	16	V
	Continuous Voltage to Neutral, All Other Pins		-0.8	15	V
T_{STG}	Storage Temperature Range		-65	+150	°C
ESD	Electrostatic Discharge Protection Level	Human Body Model, JESD22-A114		2.5	kV
		Charged Device Model, JESD22-C101		1.0	
		Machine Model, JESD22-A115		0.2	

Recommended Operating Conditions

The Recommended Operating Conditions define conditions for actual device operation. Recommended operating conditions are specified to ensure optimal performance to the datasheet specifications. Fairchild does not recommend exceeding them or designing to Absolute Maximum Ratings. *(Unless otherwise specified, refer to figure 2.)*

Symbol	Parameter	Conditions	Min.	Typ.	Max.	Unit
DC Electrical Parameters (T_A=25°C, I_{shunt}=1mA)						
V_{REG}	Power Supply Shunt Regulator Voltage	Line to Neutral	12.2	12.7	13.2	V
		Line to Neutral I_{shunt}=-2mA	-0.9	-0.7		V
I_Q	Quiescent Current	Line to Neutral=10V	350	400	450	µA
V_{REF}	Reference Voltage	VREF to Neutral	5.8	6.0	6.2	V
V_{TH}	Trip Threshold	AmpOut to VREF	3.4	3.5	3.6	V
V_{OS}	Amplifier Offset	Gain=1000	-450	0	450	µV
I_{OS}	Amplifier Input Offset(3)	Design Value	-50	0	50	nA
G	Amplifier DC Gain(3)	Design Value		100		dB
f_{GBW}	Amplifier Gain Bandwidth(3)	Design Value		1.5		MHz
V_{SW+}	Amplifier Positive Voltage Swing	AmpOut to VREF, I_{FAULT}=10µA	4.0			V
V_{SW-}	Amplifier Negative Voltage Swing	VREF to AmpOut, I_{FAULT}=-10µA	4.0			V
I_{SINK}	Amplifier Current Sink	AmpOut=V_{REF} + 3V, V_{FB}=V_{REF} + 100mV	400			µA
I_{SRL}	Amplifier Current Source	AmpOut=V_{REF} – 3V, V_{FB}=V_{REF} - 100mV	400			µA
t_d	Delay Filter	Delay from C_1 trip to SCR L->H	0.7	1.0	1.3	ms
R_{OUT}	SCR Output Resistance	SCR to Neutral=250mV, AmpOut=V_{REF}		0.5	1.0	KΩ
V_{OUT}	SCR Output Voltage	SCR to Neutral AmpOut=V_{REF}		1	10	mV
		SCR to Neutral AmpOut=V_{REF} +4V	2.5			V
I_{OUT}	SCR Output Current	SCR to Neutral=1V, AmpOut=V_{REF} + 4V	350	500		µA

Note:

3. Guaranteed by design; not tested in production.

© 2010 Fairchild Semiconductor Corporation

Functional Description

(Refer to Figure 1 and Figure 2.)

The FAN4147 is a GFCI controller for AC ground-fault circuit interrupters. The internal rectifier circuit is supplied from the AC line during the positive half cycle of the AC line voltage. The internal 12V shunt regulator uses a precision temperature-compensated bandgap reference. The combination of precision reference circuitry and precision sense amplifier provides for an accurate ground-fault tolerance. This allows for selection of external components with wider, lower-cost, parameter variations. Due to the low quiescent current, a high-value external series resistor (R1) can be used, which reduces the maximum power wattage required. The 12V shunt regulator generates the reference voltage for the sense amplifier's (A_1) non-inverting input (AC ground reference) and supplies the bias for the delay timer (T_1), comparators (C_1 & C_2), and SCR driver.

The secondary winding of the sense transformer is connected to pin 4 (VREF) and to a resistor R_{IN} directly DC connected to the inverting input of the sense amplifier at pin 5 (VFB). The feedback resistor (R_{SET}) converts the sense transformer's secondary current to a voltage at pin 6 (AmpOut). This voltage is compared to the internal window comparator (C_1 & C_2) and, when the AmpOut voltage exceeds the +/-V_{TH} threshold voltage, the window comparator triggers the internal delay timer. The output of the window comparator must stay HIGH for the duration of the t_1 timer. If the window comparator's output goes LOW, the internal delay timer starts a reset cycle. If the window comparator's output is still HIGH at the end of the t_1 pulse, the SCR driver enables the current source I_1 and disables Q_1. The current source I_1 then enables the external SCR, which energizes the solenoid, opens the contact switches to the load, and removes the hazardous ground fault. The window comparator allows for detection of a positive or negative I_{FAULT} signal independent from the phase of the line voltage.

The sense transformer typically has a toroidal core made of laminated steel rings or solid ferrite material. The secondary of the transformer is typically 800 to 1500 turns of #40 wire wound through the toroid. The primary is typically one to two turns made by passing the AC hot and neutral wires through the center of the toroid. When a ground fault exists, a difference exists between the current flowing in hot and neutral wires. The primary difference current, divided by the primary-to-secondary turns ratio, is the current that flows through the secondary wire of the transformer.

A grounded neutral condition occurs when the neutral-line is grounded at the neutral-load side.

Depending on the resistance of the grounded neutral connection, this condition causes the sense coil to detect a lower ground fault current. The detection of a ground-to-load-neutral fault relies on the principle of positive feedback. When this occurs, the sense and neutral coils are mutually coupled, which produces a positive feedback path around the sense amplifier. This positive feedback causes the sense amplifier to oscillate. When the peak oscillation voltage exceeds the SCR trigger threshold, the internal delay timer is enabled. Since the amplifier's output signal is crossing the window comparator's trip threshold typically at 6KHz, the delay timer alternates between detection of a fault/no fault. The ratio of the fault/no-fault detection time interval determines if the SCR driver is enabled.

The sensitivity of the grounded neutral detection is changed by the neutral coil turns and C2, C3 values.

R_{SET} Resistor Calculation

The AmpOut signal must exceed the window comparator's V_{TH} threshold voltage for longer than the delay timer. Therefore:

$$V_{TH}=I_{FAULT} \times 1.41 \times R_{SET} \times C_{OS}(2\pi \times (t/2P)) / N \quad (1)$$

$$R_{SET}=(V_{TH} \times N) / (1.41 \times I_{FAULT} \times C_{OS}(\pi \times t/P)) \quad (2)$$

where:

V_{TH} = 3.5V ;

I_{FAULT} = 5mA (UL943) ;

t = 1ms (timer delay);

P = Period of the AC Line (1/60Hz);

N = Ratio of secondary to primary turns (1000:1);

R_{SET} = 505KΩ (511KΩ standard 1% value).[4]

Note:

4. In practice, the transformer is non-ideal, so R_{SET} may need to be adjusted by up to 30% to obtain the desired I_{fault} trip threshold.

V_{OS} Trip Threshold Error Calculation

Since the sense coil is DC connected to the feedback of the sense amplifier, the V_{OS} offset introduces an I_{fault} threshold error. This error can be calculated as:

%Error=

$$100 \times (V_{OS} \times R_{SET}) / (R_{IN} + RL_{DC} + RL_{AC}) / V_{TH} \quad (3)$$

where:

V_{OS} = +/-450μV (worse case);
= +/-150μV (typical);

R_{SET} = 511KΩ;

R_{IN} = 470Ω (typical value);

RL_{DC} = 75Ω (sense coil secondary DC resistance);

RL_{AC} = 1.5KΩ ($AC_{(j\omega L)}$ impedance of sense coil) (L= 4H, f= 60Hz);

V_{TH} = 3.5V;

%Error = +/- 3.2% (worst case); +/-1.1% (typical).

© 2010 Fairchild Semiconductor Corporation

Typical Performance Characteristics

Unless otherwise specified, results are T_A=25°C and according to Figure 2 with solenoid disconnected.

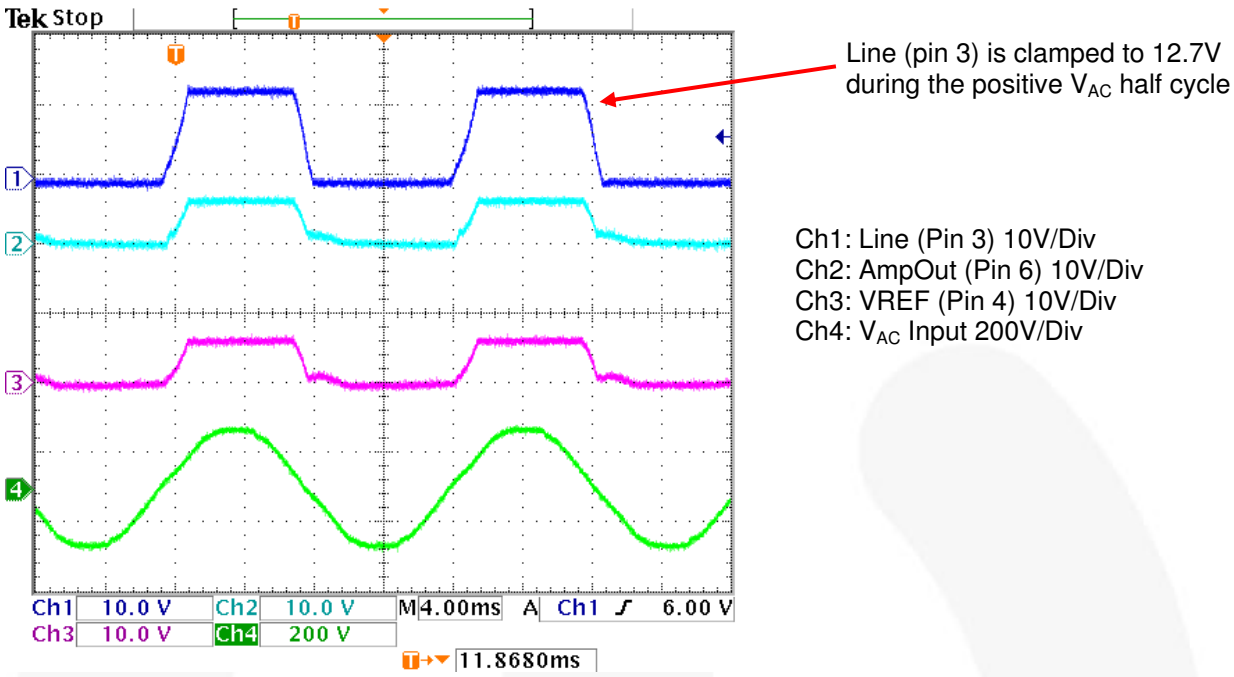

Figure 4. Typical Waveforms with No Ground Fault

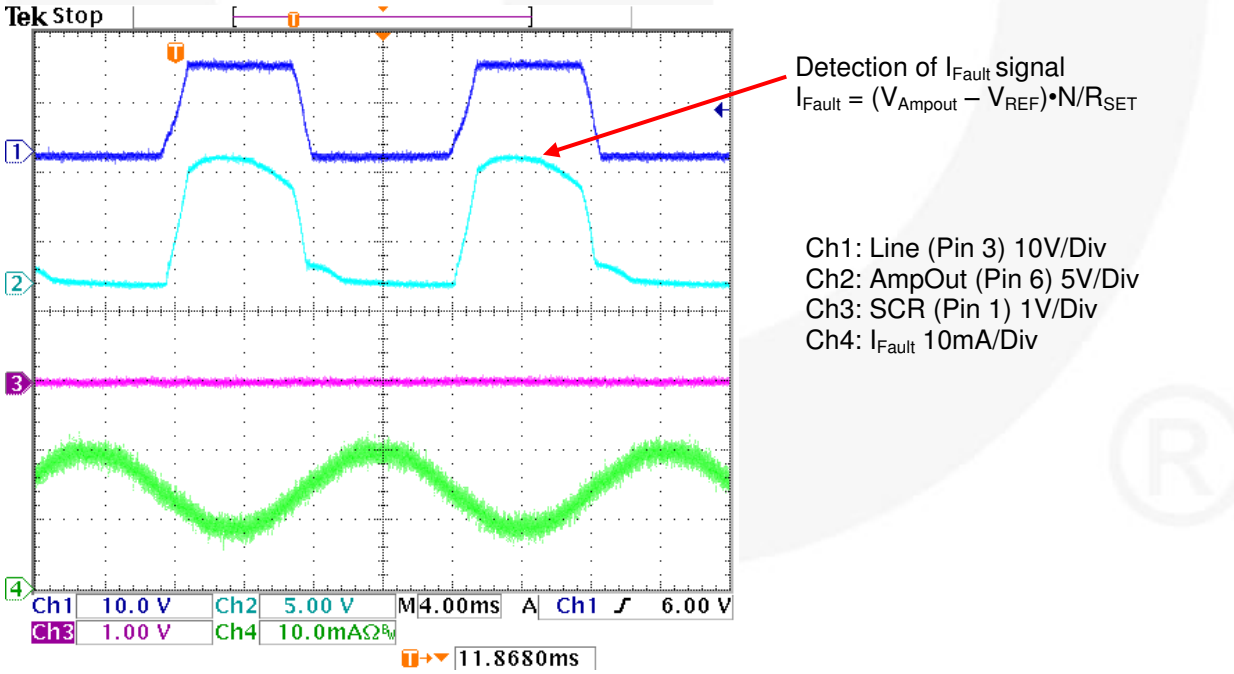

Figure 5. Typical Waveforms with 4mA Ground Fault

Typical Performance Characteristics

Unless otherwise specified, results are T_A=25°C and according to Figure 2 with solenoid disconnected.

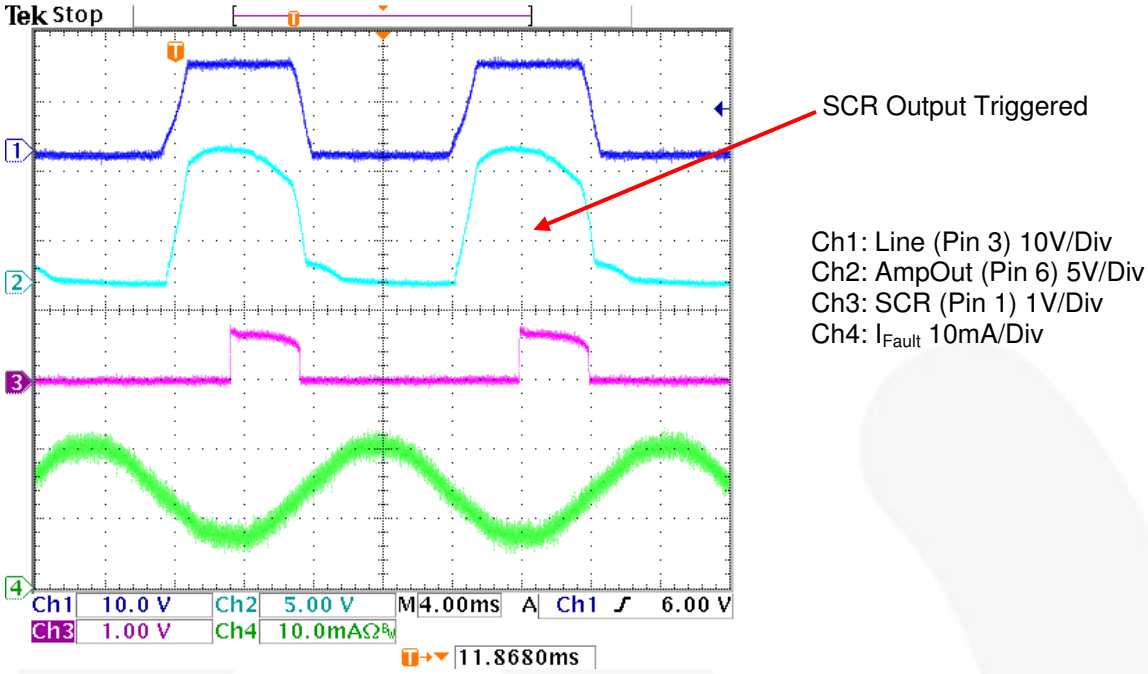

Figure 6. Typical Waveforms with 5mA Ground Fault

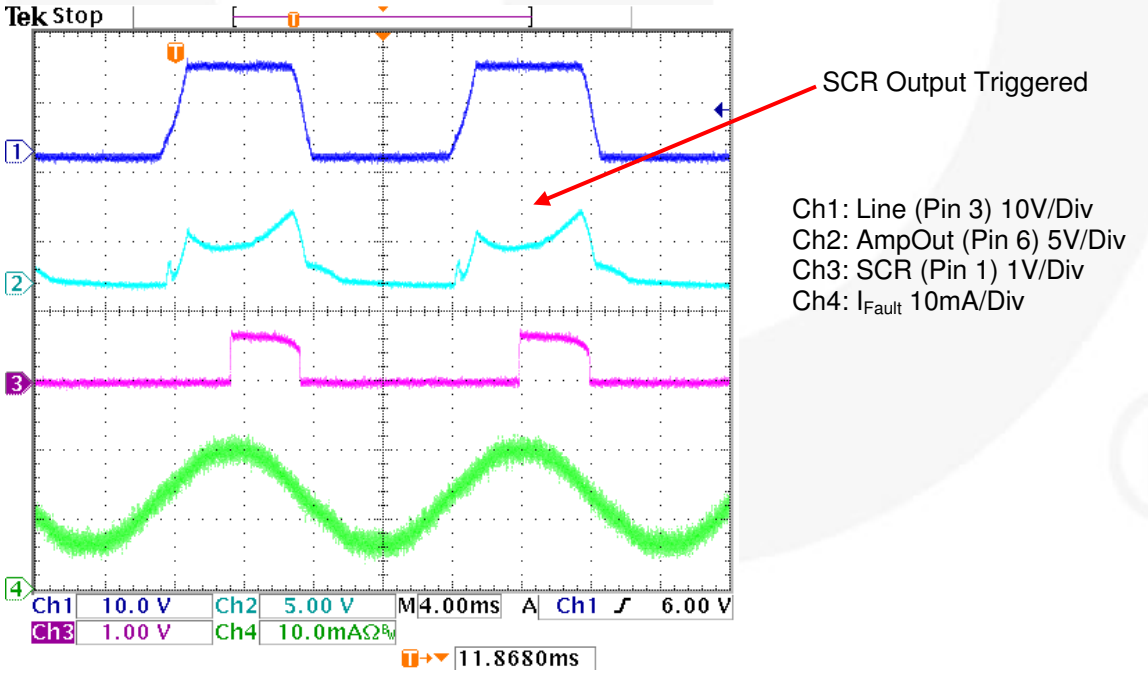

Figure 7. Typical Waveforms with 5mA Ground Fault (Line Polarity Reversal)

© 2010 Fairchild Semiconductor Corporation

Typical Performance Characteristics

Unless otherwise specified, results are T_A=25°C and according to Figure 2 with solenoid disconnected.

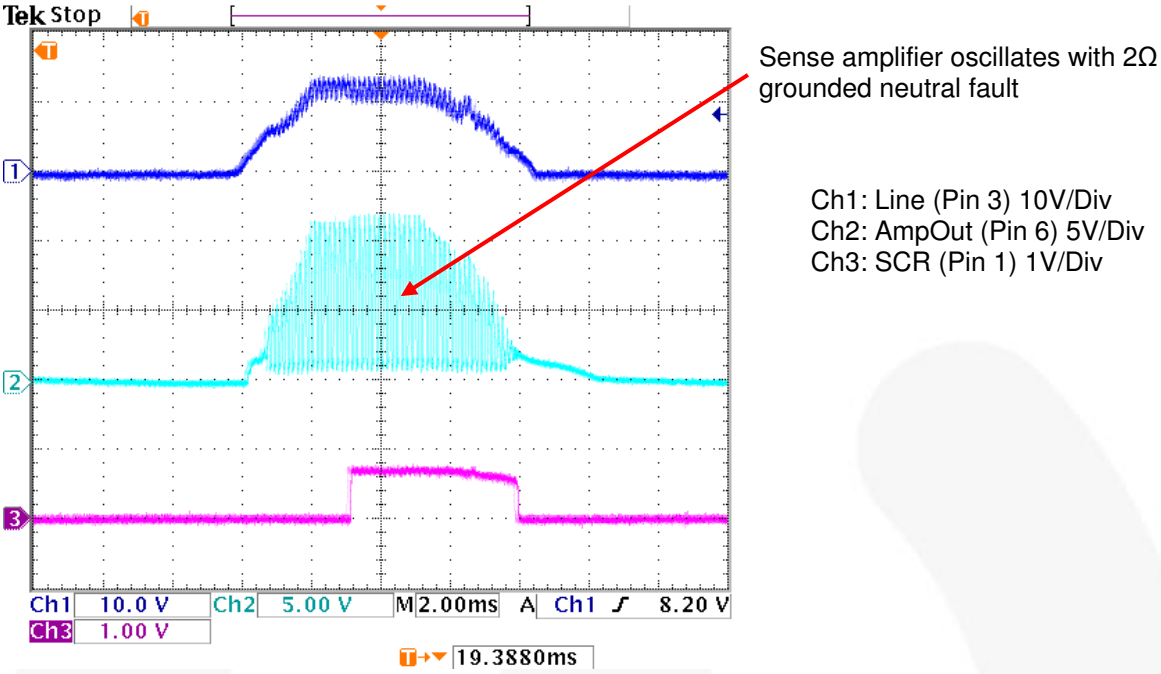

Figure 8. Typical Waveforms for Grounded Neutral Detection

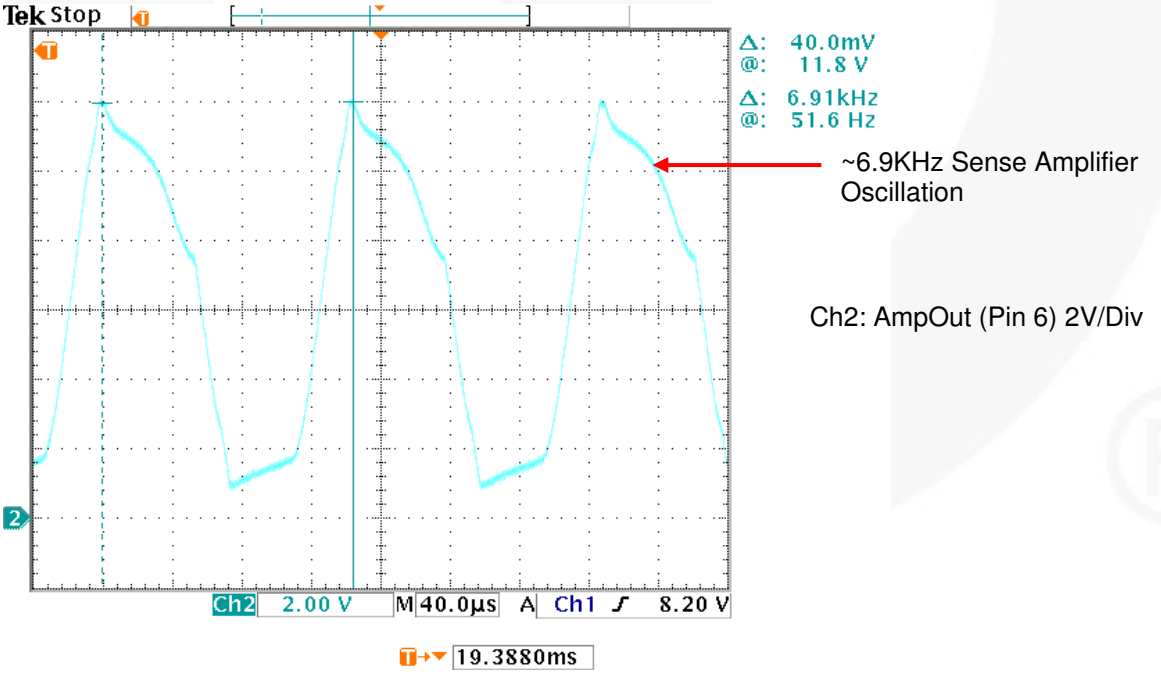

Figure 9. Typical Waveform for Grounded Neutral Detection

© 2010 Fairchild Semiconductor Corporation

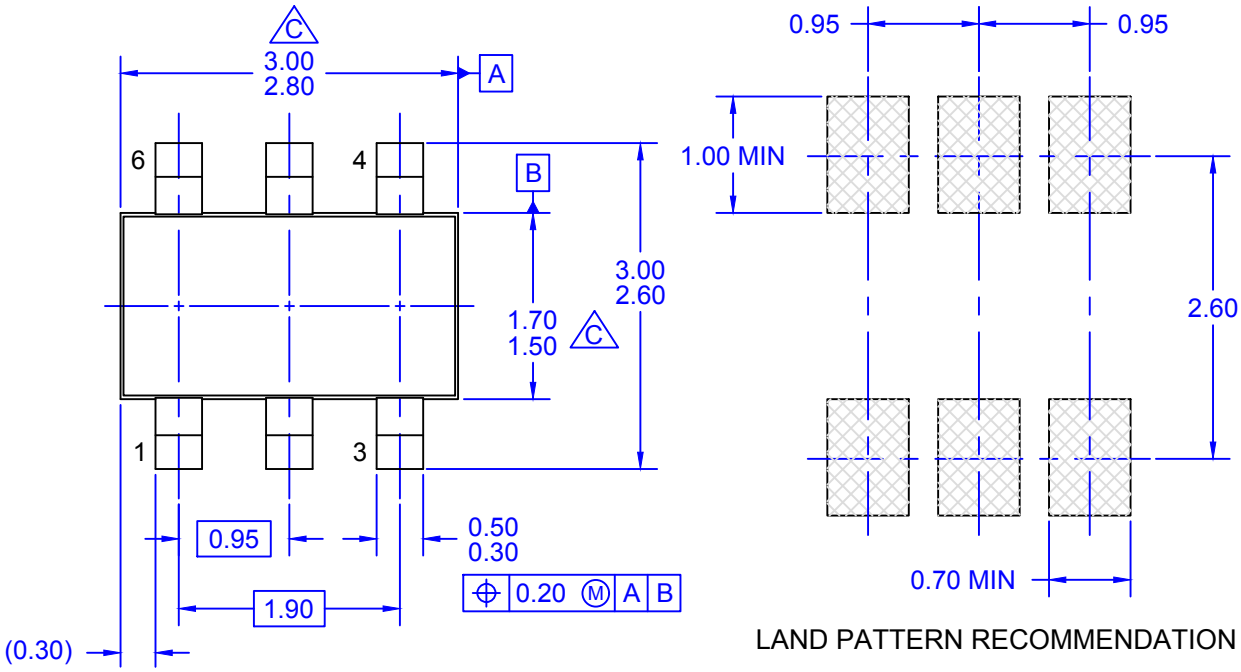

LAND PATTERN RECOMMENDATION

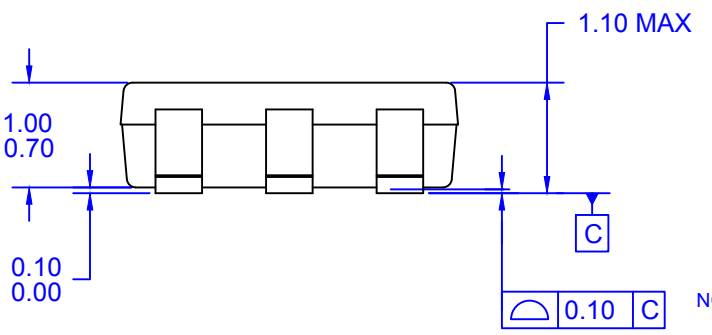

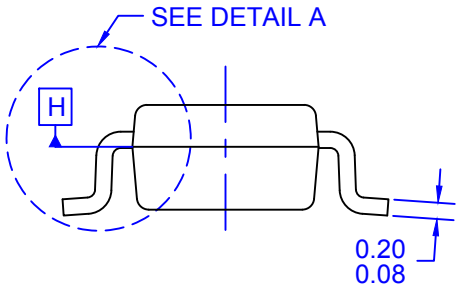

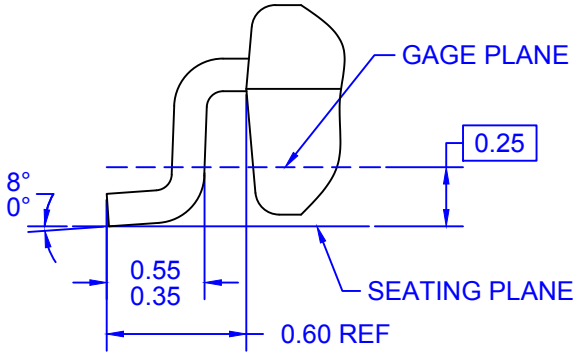

DETAIL A
SCALE: 50X

NOTES: UNLESS OTHERWISE SPECIFIED

A) THIS PACKAGE CONFORMS TO JEDEC MO-193. VAR. AA, ISSUE E.

B) ALL DIMENSIONS ARE IN MILLIMETERS.

C) PACKAGE LENGTH DOES NOT INCLUDE MOLD FLASH, PROTRUSIONS OR GATE BURRS. MOLD FLASH, PROTRUSIONS OR GATE BURRS SHALL NOT EXCEED 0.25mm PER END. PACKAGE WIDTH DOES NOT INCLUDE INTERLEAD FLASH OR PROTRUSION. INTERLEAD FLASH OR PROTRUSION SHALL NOT EXCEED 0.25mm PER SIDE. PACKAGE LENGTH AND WIDTH DIMENSIONS ARE DETERMINED AT DATUM H.

D) DRAWING FILE NAME: MKT-MA06AREVF

ON Semiconductor

ON Semiconductor and ON are trademarks of Semiconductor Components Industries, LLC dba ON Semiconductor or its subsidiaries in the United States and/or other countries. ON Semiconductor owns the rights to a number of patents, trademarks, copyrights, trade secrets, and other intellectual property. A listing of ON Semiconductor's product/patent coverage may be accessed at www.onsemi.com/site/pdf/Patent−Marking.pdf. ON Semiconductor reserves the right to make changes without further notice to any products herein. ON Semiconductor makes no warranty, representation or guarantee regarding the suitability of its products for any particular purpose, nor does ON Semiconductor assume any liability arising out of the application or use of any product or circuit, and specifically disclaims any and all liability, including without limitation special, consequential or incidental damages. Buyer is responsible for its products and applications using ON Semiconductor products, including compliance with all laws, regulations and safety requirements or standards, regardless of any support or applications information provided by ON Semiconductor. "Typical" parameters which may be provided in ON Semiconductor data sheets and/or specifications can and do vary in different applications and actual performance may vary over time. All operating parameters, including "Typicals" must be validated for each customer application by customer's technical experts. ON Semiconductor does not convey any license under its patent rights nor the rights of others. ON Semiconductor products are not designed, intended, or authorized for use as a critical component in life support systems or any FDA Class 3 medical devices or medical devices with a same or similar classification in a foreign jurisdiction or any devices intended for implantation in the human body. Should Buyer purchase or use ON Semiconductor products for any such unintended or unauthorized application, Buyer shall indemnify and hold ON Semiconductor and its officers, employees, subsidiaries, affiliates, and distributors harmless against all claims, costs, damages, and expenses, and reasonable attorney fees arising out of, directly or indirectly, any claim of personal injury or death associated with such unintended or unauthorized use, even if such claim alleges that ON Semiconductor was negligent regarding the design or manufacture of the part. ON Semiconductor is an Equal Opportunity/Affirmative Action Employer. This literature is subject to all applicable copyright laws and is not for resale in any manner.

PUBLICATION ORDERING INFORMATION

LITERATURE FULFILLMENT:
Literature Distribution Center for ON Semiconductor
19521 E. 32nd Pkwy, Aurora, Colorado 80011 USA
Phone: 303−675−2175 or 800−344−3860 Toll Free USA/Canada
Fax: 303−675−2176 or 800−344−3867 Toll Free USA/Canada
Email: orderlit@onsemi.com

N. American Technical Support: 800−282−9855 Toll Free USA/Canada
Europe, Middle East and Africa Technical Support:
Phone: 421 33 790 2910
Japan Customer Focus Center
Phone: 81−3−5817−1050

ON Semiconductor Website: **www.onsemi.com**

Order Literature: http://www.onsemi.com/orderlit

For additional information, please contact your local Sales Representative