3A 380KHZ 28V PWM Buck DC/DC Converter

General Description

The FAC1583 is a 380 KHz fixed frequency monolithic step down switch mode regulator with a built in internal Power MOSFET. It achieves 3A continuous output current over a wide input supply range with excellent load and line regulation.
The device includes a voltage reference, oscillation circuit, error amplifier, internal PMOS and etc.

The PWM control circuit is able to adjust the duty ratio linearly from 0 to 100%. An enable function, an over current protection function and a short circuit protection function are built inside. An internal compensation block is built in to minimize external component count.

The FAC1583 serves as ideal power supply units for portable devices.

Features

- 3A Constant Output Current
- 140mΩ R_{DSON} Internal Power PMOSFET Switch
- Up to 95% Efficiency
- Fixed 380KHz Frequency
- Wide 3.6V to 28V Input Voltage Range
- Output Adjustable from 1.222V to 26V
- Built in Frequency Compensation
- Built in Thermal Shutdown Function
- Built in Current Limit Function
- SOIC-8 Package is Available
- The minimum dropout up to 0.3V

Applications

- Portable DVD
- LCD Monitor / TV
- Battery Charger
- ADSL Modem
- Telecom / Networking Equipment



SOIC-8

Figure 1 Package Type of FAC1583

3A 380KHZ 28V PWM Buck DC/DC Converter

Pin Configurations

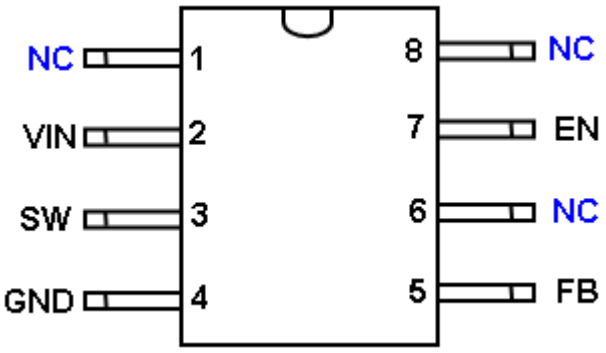

Figure 2 Pin Configuration of FAC1583 (Top View)

Pin Description

Pin Number	Pin Name	Description
1,6, 8	NC	Not Connect.
2	Vin	Supply Voltage Input Pin. FAC1583 operates from a 3.6V to 28V DC voltage. Bypass Vin to GND with a suitably large capacitor to eliminate noise on the input.
3	SW	Power Switch Output Pin. SW is the switch node that supplies power to the output.
4	GND	Ground Pin. Care must be taken in layout. This pin should be placed outside of the Schottky Diode to output capacitor ground path to prevent switching current spikes from inducing voltage noise into FAC1583.
5	FB	Feedback Pin. Through an external resistor divider network, FB senses the output voltage and regulates it. The feedback threshold voltage is 1.222V.
7	EN	Enable Pin. EN is a digital input that turns the regulator on or off.Drive EN pin high to turn on the device, drive it low to turn it off.

Ordering Information

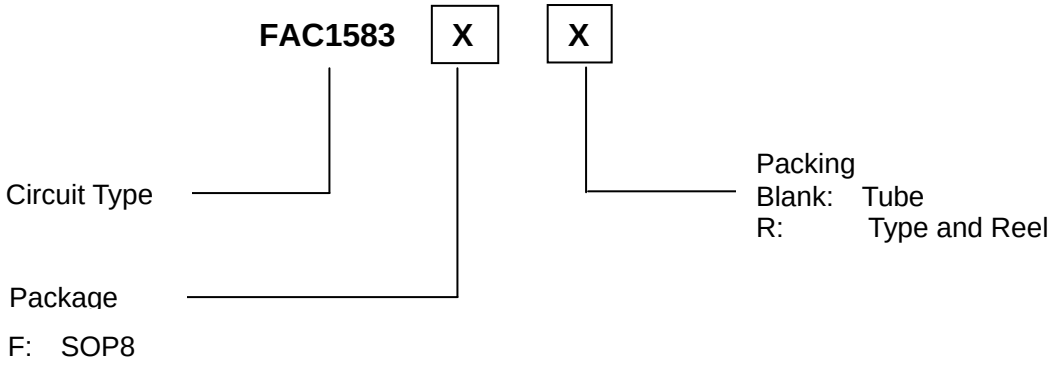

3A 380KHZ 28V PWM Buck DC/DC Converter

Function Block

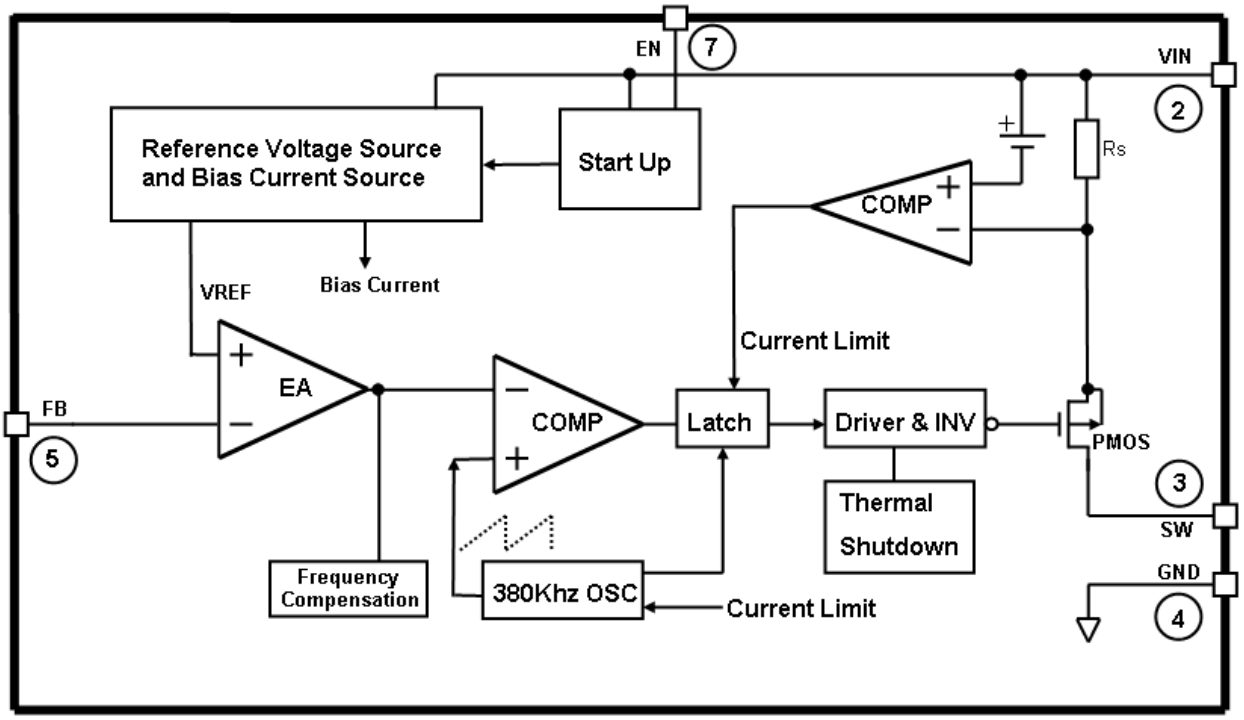

Figure 3 Function Block Diagram of FAC1583

Absolute Maximum Ratings

Parameter	Symbol	Value	Unit
Input Voltage	V_{IN}	-0.3 to 28	V
Feedback Pin Voltage	V_{FB}	-0.3 to Vin	V
Enable Pin Voltage	V_{EN}	-0.3 to 12	V
Switch Pin Voltage	V_{SW}	-0.3 to Vin	V
Power Dissipation	P_D	Internally limited	mW
Operating Junction Temperature	T_J	150	ºC
Storage Temperature	T_{STG}	-65 to 150	ºC
Lead Temperature (Soldering, 10 sec)	T_{LEAD}	260	ºC
ESD (HBM)		2000	V
Thermal Resistance-Junction to Ambient	RθJA	85	ºC / W
Thermal Resistance-Junction to Case	RθJC	45	ºC / W

Note1: Stresses greater than those listed under Maximum Ratings may cause permanent damage to the device. This is a stress rating only and functional operation of the device at these or any other conditions above those indicated in the operation is not implied. Exposure to absolute

3A 380KHZ 28V PWM Buck DC/DC Converter

maximum rating conditions for extended periods may affect reliability.

Recommended Operating Conditions

Parameter	Symbol	Min.	Max.	Unit
Input Voltage	V_{IN}	3.6	28	V
Operating Junction Temperature	T_J	-40	125	ºC
Operating Ambient Temperature	T_A	-40	85	ºC

Electrical Characteristics

V_{CC} = 12V, T_a = 25℃ unless otherwise specified.

Parameters	Symbol	Test Condition	Min.	Typ.	Max.	Unit
Input voltage	V_{IN}		3.6		28	V
Shutdown Supply Current	I_{STBY}	V_{EN}=0V		30	90	uA
Supply Current	I_{CC}	V_{EN}=2V, V_{FB}=1.3V		3.6	4	mA
Feedback Voltage	V_{FB}	V_{IN} = 3.6V to 23V	1.21	1.222	1.26	V
Feedback Bias Current	I_{FB}	V_{FB}=1.3V		0.1	0.5	uA
Switch Current Limit	I_{LIM}			4	5	A
Oscillator Frequency	F_{OSC}		320	380	440	KHz
Frequency of Current Limit or Short Circuit Protection	F_{OSC1}	V_{FB}=0V		42		KHz
EN Pin Threshold	V_{EN}		0.7	1.2	1.7	V
EN Pin Input Leakage Current	I_H	V_{EN}=2.5V		-0.1	-1	uA
	I_L	V_{EN}=0.5V		-3	-10	uA
Internal PMOS R_{DSON}	R_{DSON}	V_{IN} =12V, V_{FB}=0V V_{EN}=12V, Iout=3A		80		mΩ
Max. Duty Cycle	D_{MAX}	V_{FB}=0V, I_{SW}=0.1A		100		%
Efficiency	η	V_{IN}=12V ,Vout=5V Iout=3A	-	92	-	%
Thermal Shutdown	T_{OTSD}			165		ºC

3A 380KHZ 28V PWM Buck DC/DC Converter

Typical Application Circuit

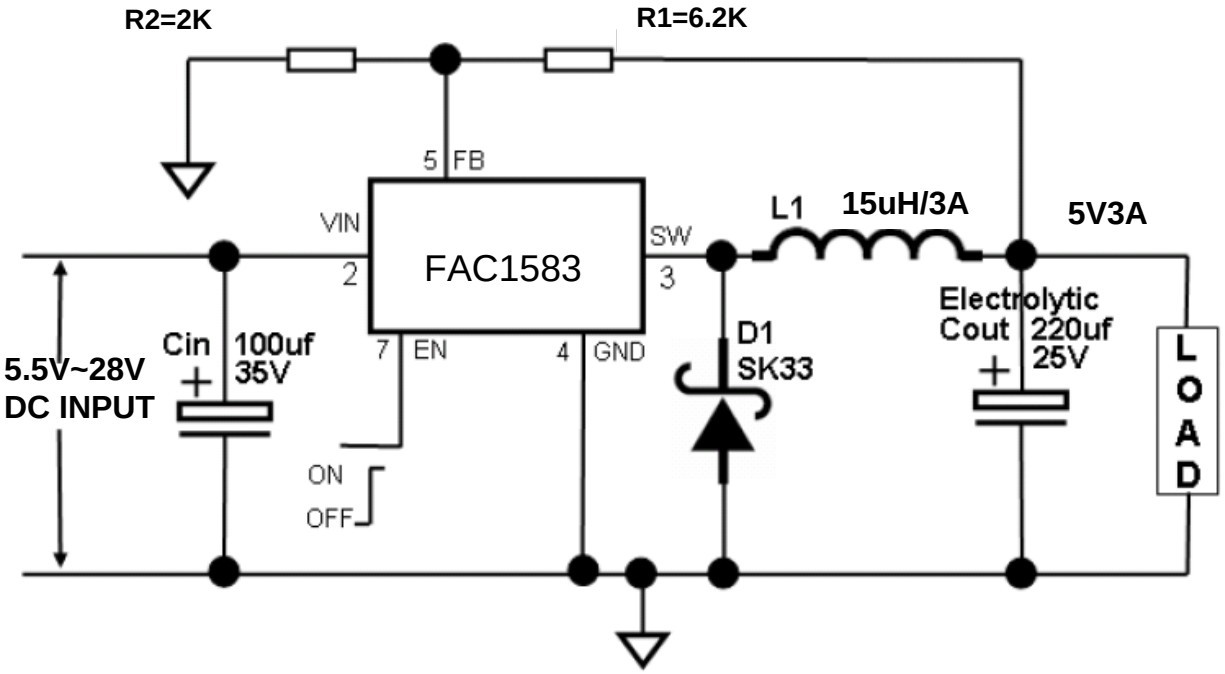

Fig8. FAC1583 Typical Application Circuit @ 5V/3A

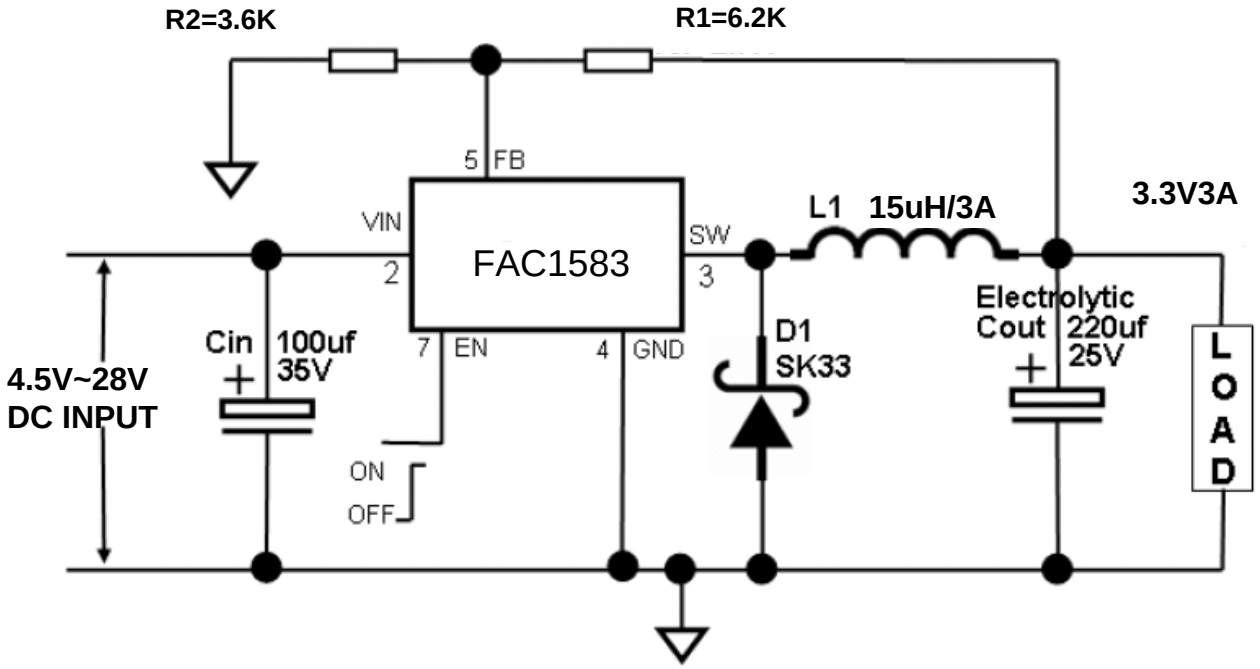

Fig9. FAC1583 Typical Application Circuit @ 3.3V/3A

3A 380KHZ 28V PWM Buck DC/DC Converter

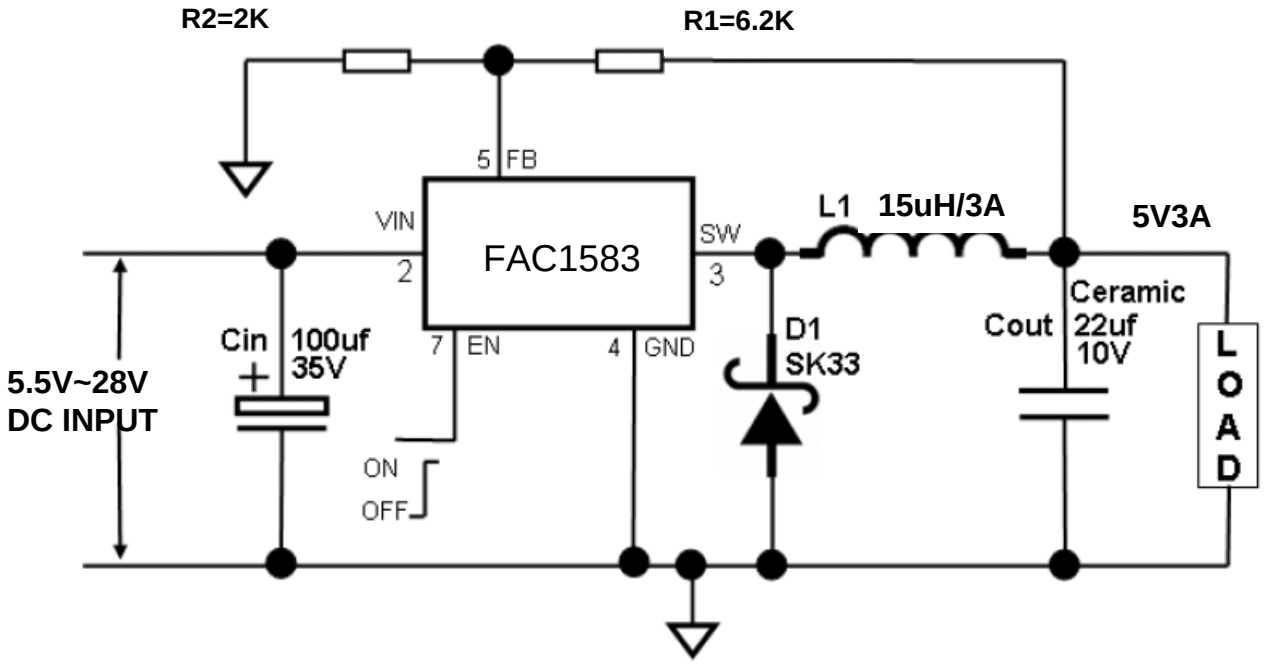

Fig10. FAC1583 Typical Application Circuit (with ceramic output capacitor) @ 5V/3A

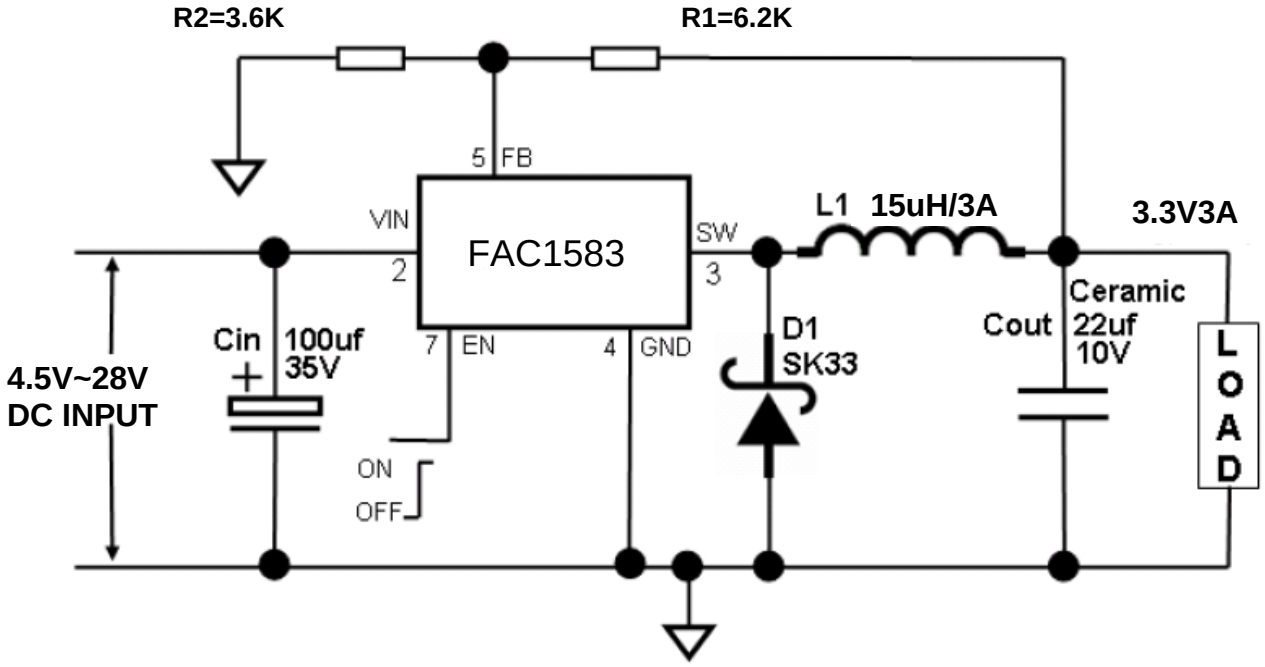

Fig11. FAC1583 Typical Application Circuit (with ceramic output capacitor) @ 3.3V/3A

3A 380KHZ 28V PWM Buck DC/DC Converter

Schottky Rectifier Selection Guide

Vin (Max)	3A Load Current		3A Load Current	
	Part Number	Vendor	Part Number	Vendor
20V	B220	1	B320	1
	SK23	6	SK33	1,6
	SR22	6	SS32	3
30V	20BQ030	4	B330	1
	B230	1	B340L	1
	SK23	6	MBRD330	4,5
	SR23	3,6	SK33	1,6
	SS23	2,3	SS33	2,3

Table 1 lists some rectifier manufacturers.

No.	Vendor	Web Site
1	Diodes, Inc.	www.diodes.com
2	Fairchild Semiconductor	www.fairchildsemi.com
3	General Semiconductor	www.gensemi.com
4	International Rectifier	www.irf.com
5	On Semiconductor	www.onsemi.com
6	Pan Jit International	www.panjit.com.tw

Table 2 Schottky Diode manufacturers.

Output Voltage VS R1, R2 Resistor Selection Guide

$$Vout = (1+R1/R2)*1.222V$$

Vout	R1	R2
1.8V	3.9K	8.2K
2.5V	3.2K	3K
3.3V	6.2K	3.6K
5V	6.2K	2K
9V	13K	2K
12V	16K	1.8K

Table 3. Vout VS. R1, R2 Select Table

3A 380KHZ 28V PWM Buck DC/DC Converter

Function Description

Pin Functions

V_{IN}
This is the positive input supply for the IC switching regulator. A suitable input bypass capacitor must be present at this pin to minimize voltage transients and to supply the switching currents needed by the regulator

Gnd
Circuit ground.

SW
Internal switch. The voltage at this pin switches between (V_{IN} – V_{GS}) and approximately – 0.5V, with a duty cycle of approximately V_{OUT} / V_{IN}. To minimize coupling to sensitive circuitry, the PC board copper area connected to this pin should be kept a minimum.

FB
Senses the regulated output voltage to complete the feedback loop.

EN
Allows the switching regulator circuit to be shutdown using logic level signals thus dropping the total input supply current to approximately 30uA. Pulling this pin below a threshold voltage of approximately 1.3V turns the regulator down, and pulling this pin above 1.3V **(up to a maximum of 12V**) shuts the regulator on. Forautomatic starup condition , can be implemented by the addition of a resistive voltage divider from V_{IN} to GND.

Thermal Considerations

The FAC1583 is available in SOP8 package.

The SOP8 package needs a heat sink under most conditions. The size of the heat sink depends on the input voltage, the output voltage, the load current and the ambient temperature. The FAC1583 junction temperature rises above ambient temperature for a 3A load and different input and output voltages. The data for these curves was taken with the FAC1583 (SOP8 package) operating as a buck-switching regulator in an ambient temperature of 25°C (still air). These temperature rise numbers are all approximate and there are many factors that can affect these temperatures. Higher ambient temperatures require more heat sinking.

For the best thermal performance, wide copper traces and generous amounts of printed circuit board copper should be used in the board layout. (Once exception to this is the output (switch) pin, which should not have large areas of copper.) Large areas of copper provide the best transfer of heat (lower thermal resistance) to the surrounding air, and moving air lowers the thermal resistance even further.

Package thermal resistance and junction temperature rise numbers are all approximate, and there are many factors that will affect these numbers. Some of these factors include board size, shape, thickness, position, location, and even board temperature. Other factors are, trace width, total printed circuit copper area, copper thickness, single or double-sided, multi-layer board and the amount of solder on the board.

The effectiveness of the PC board to dissipate heat also depends on the size, quantity and spacing of other components on the board, as well as whether the surrounding air is still or moving. Furthermore, some of these components such as the catch diode will add heat to the PC board and the heat can vary as the input voltage changes. For the inductor, depending on the physical size, type of core material and the DC resistance, it could either act as a heat sink taking heat away from the board, or it could add heat to the board.

Setting the Output Voltage

The output voltage is set using a resistive voltage divider from the output voltage to FB. The voltage divider divides the
output voltage down by the ratio:
VFB = VOUT * R2 / (R1 + R2)
Thus the output voltage is:
VOUT = 1.222 * (R1 + R2) / R2
R2 can be as high as 100KΩ, but a typical value is 10KΩ. Using that value, R1 is determined by:
R1 ~= 8.18 * (VOUT – 1.222) (KΩ)
For example, for a 3.3V output voltage, R2 is 10KΩ, and R1 is 17KΩ.

3A 380KHZ 28V PWM Buck DC/DC Converter

Inductor

The inductor is required to supply constant current to the output load while being driven by the switched input voltage. A larger value inductor results in less ripple current that in turn results in lower output ripple voltage. However, the larger value inductor has a larger physical size, higher series resistance, and/or lower saturation current. Choose an inductor that does not saturate under the worst-case load conditions. A good rule for determining the inductance is to allow the peak-to-peak ripple current in the inductor to be approximately 30% of the maximum load
current. Also, make sure that the peak inductor current (the load current plus half the peak-to-peak inductor ripple current) is below the TBDA minimum current limit. The inductance value can be calculated by the equation:

L = (VOUT) * (VIN-VOUT) / VIN * f * ΔI

Where VOUT is the output voltage, VIN is the input voltage, f is the switching frequency, and ΔI is the peak-to-peak inductor ripple current.

Input Capacitor

The input current to the step-down converter is discontinuous, and so a capacitor is required to supply the AC current to the step-down converter while maintaining the DC input voltage. A low ESR capacitor is required to keep the noise at the IC to a minimum. Ceramic capacitors are preferred, but tantalum or low-ESR electrolytic capacitors may also suffice.

The input capacitor value should be greater than 10μF. The capacitor can be electrolytic, tantalum or ceramic. However since it absorbs the input switching current it requires an adequate ripple current rating. Its RMS current rating should be greater than approximately 1/2 of the DC load current.

For insuring stable operation should be placed as close to the IC as possible. Alternately a smaller high quality ceramic 0.1μF capacitor may be placed closer to the IC and a larger capacitor placed further away. If using this technique, it is recommended that the larger capacitor be a tantalum or electrolytic type. All ceramic capacitors should be places close to the FAC1583.

Output Capacitor

The output capacitor is required to maintain the DC output voltage. Low ESR capacitors are preferred to keep the output voltage ripple low. The characteristics of the output capacitor also affect the stability of the regulation control system. Ceramic, tantalum, or low ESR electrolytic capacitors are recommended. In the case of ceramic capacitors, the impedance at the switching frequency is dominated by the capacitance, and so the output voltage ripple is mostly independent of the ESR. The output voltage ripple is estimated to be:

VRIPPLE ~= 1.4 * VIN * (fLC/fSW)^2

Where VRIPPLE is the output ripple voltage, VIN is the input voltage, fLC is the resonant frequency of the LC filter, fSW is the switching frequency. In the case of tanatalum or low-ESR electrolytic capacitors, the ESR dominates the impedance at the switching frequency, and so the output ripple is calculated as:

VRIPPLE ~= ΔI * RESR

Where VRIPPLE is the output voltage ripple, ΔI is the inductor ripple current, and RESR is the equivalent series resistance of the output capacitors.

Output Rectifier Diode

The output rectifier diode supplies the current to the inductor when the high-side switch is off. To reduce losses due to the diode forward voltage and recovery times, use a Schottky rectifier.

Table 1 provides the Schottky rectifier part numbers based on the maximum input voltage and current rating.

Choose a rectifier who’s maximum reverse voltage rating is greater than the maximum input voltage, and who’s current rating is greater than the maximum load current.

3A 380KHZ 28V PWM Buck DC/DC Converter

Over Current Protection (OCP)

The cycle by cycle current limit threshold is set between 4A and 5A. When the load current reaches the current limit threshold, the cycle by cycle current limit circuit turns off the high side switch immediately to terminate the current duty cycle. The inductor current stops rising. The cycle by cycle current limit protection directly limits inductor peak current. The average inductor current is also limited due to the limitation on peak inductor current. When the cycle by cycle current limit circuit is triggered, the output voltage drops as the duty cycle is decreasing.

Thermal Management and Layout Consideration

In the FAC1583 buck regulator circuit, high pulsing current flows through two circuit loops. The first loop starts from the input capacitors, to the VIN pin, to the VOUT pins, to the filter inductor, to the output capacitor and load, and then returns to the input capacitor through ground.

Current flows in the first loop when the high side switch is on. The second loop starts from the inductor, to the output capacitors and load, to the GND pin of the FAC1583, and to the VOUT pins of the FAC1583. Current flows in the second loop when the low side diode is on.

In PCB layout, minimizing the two loops area reduces the noise of this circuit and improves efficiency. A ground plane is recommended to connect input capacitor, output capacitor, and GND pin of the FAC1583.

In the FAC1583 buck regulator circuit, the two major power dissipating components are the FAC1583 and output inductor. The total power dissipation of converter circuit can be measured by input power minus output power.

$$P_{total_loss} = V_{IN} \times I_{IN} - V_O \times I_O$$

The power dissipation of inductor can be approximately calculated by output current and DCR of inductor.

$$P_{inductor_loss} = I_O^2 \times R_{inductor} \times 1.1$$

The junction to ambient temperature can be got from power dissipation in the FAC1583 and thermal impedance from junction to ambient.

$$T_{(jun-amb)} = (P_{totalloss} - P_{inductorloss}) \times \Theta_{JA}$$

The maximum junction temperature of FAC1583 is 145°C, which limits the maximum load current capability. Please see the thermal de-rating curves for the maximum load current of the FAC1583 under different ambient temperatures.

The thermal performance of the FAC1583 is trongly affected by the PCB layout. Extra care should be taken by users during the design process to nsure that the IC will operate under the recommended environmental conditions.

Several layout tips are listed below for the best electric and thermal performance.

1. Do not use thermal relief connection to the VIN and the GND pin. Pour a maximized copper area to the GND pin and the VIN pin to help thermal dissipation.
2. Input capacitor should be connected to the VIN pin and the GND pin as close as possible.
3. Make the current trace from VOUT pins to L to the GND as short as possible.
4. Pour copper plane on all unused board area and connect it to stable DC nodes, like VIN, GND, or VOUT.
5. Keep sensitive signal traces such as trace connecting FB pin away from the VOUT pins.

3A 380KHZ 28V PWM Buck DC/DC Converter

Package Information

SOP8 Package Outline Dimensions

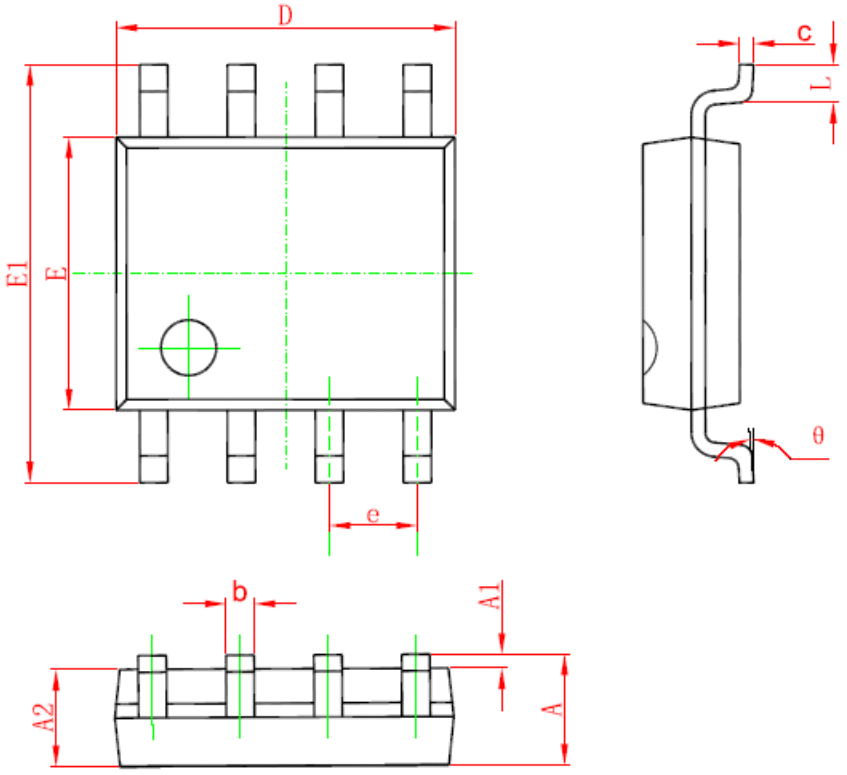

Symbol	Dimensions In Millimeters		Dimensions In Inches	
	Min	Max	Min	Max
A	1.350	1.750	0.053	0.069
A1	0.100	0.250	0.004	0.010
A2	1.350	1.550	0.053	0.061
b	0.330	0.510	0.013	0.020
c	0.170	0.250	0.006	0.010
D	4.700	5.100	0.185	0.200
E	3.800	4.000	0.150	0.157
E1	5.800	6.200	0.228	0.244
e	1.270(BSC)		0.050(BSC)	
L	0.400	1.270	0.016	0.050
θ	0°	8°	0°	8°