Fintek Confidential
Do Not Copy!

F75377 Datasheet

H/W Monitor IC with Automatic Fan Speed Control

Release Date: March, 2008
Revision: V0.12P

F75377 Datasheet Revision History

Version	Date	Page	Revision History
V0.10P	2007/12/18	-	Preliminary Version.
V0.11P	2007/12/19	-	Modify pin assignment and package type
V0.12P	2008/3/3	-	Add function/register descriptions

Fintek Confidential
Do Not Copy!

Please note that all data and specifications are subject to change without notice. All the trade marks of products and companies mentioned in this data sheet belong to their respective owners.

LIFE SUPPORT APPLICATIONS

These products are not designed for use in life support appliances, devices, or systems where malfunction of these products can reasonably be expected to result in personal injury. Customers using or selling these products for use in such applications do so at their own risk and agree to fully indemnify Fintek for any damages resulting from such improper use or sales.

Table of Contents

1. GENERAL DESCRIPTION 8

2. FEATURES 8

3. KEY SPECIFICATIONS 9

4. PIN CONFIGURATION 10

5. PIN DESCRIPTION 10

5.1. POWER PIN 11

5.2. MONITORING ITEMS AND FAN SPEED CONTROL 11

6. FUNCTION DESCRIPTION 12

6.1 ACCESS INTERFACE 12

6.2 TEMPERATURE MONITORING 13

6.3 BETA COMPENSATION 14

6.4 PECI/SST MASTER 15

6.5 FAN CONTROL MACHINE 15

6.6 PCB LAYOUT GUIDE 19

7. REGISTER DESCRIPTION 20

7.1 CONFIGURATION REGISTER — INDEX 01H 20

7.2 CONFIGURATION REGISTER — INDEX 0AH 20

7.3 TCCA TEMP REGISTER — INDEX 0CH 21

7.4 SST ADDRESS REGISTER — INDEX 0DH 21

7.5 PECI SLOPE REGISTER — INDEX 0EH 21

7.6 CONFIGURATION REGISTER — INDEX 11H 21

7.7 EXTERNAL DEVICE ADDRESS REGISTER - INDEX 40H ~ 46H 22

7.8 EXTERNAL DEVICE INDEX REGISTER - INDEX 48H ~ 4EH 22

7.9 EXTERNAL DEVICE DATA REGISTER - INDEX 4F 22

7.10 EXTERNAL DEVICE ENABLE REGISTER - INDEX 50H 22

7.11 EXTERNAL DEVICE SELECT REGISTER - INDEX 51H 22

7.12 EXTERNAL DEVICE MONITORING FREQUENCY SELECT REGISTER 1 - INDEX 52H 23

7.13 EXTERNAL DEVICE MONITORING FREQUENCY SELECT REGISTER 2 - INDEX 53H 23

7.14 I2C MASTER CONTROL REGISTER - INDEX 54H 23

7.15 INTERFACE CONTROL REGISTER - INDEX 55H 23

Fintek Confidential Do Not Copy!

7.16 I2C MASTER STATUS REGISTER - INDEX 56H 23
7.17 FAN PIN FUNCTION SELECT AND PIN STATUS REGISTER - INDEX 57H 24
7.18 FAN GPIO FUNCTION CONTROL REGISTER - INDEX 58H 24
7.19 TEMPERATURE PME# ENABLE REGISTER — INDEX 60H (IF DEV_BANK_EN IS 0) 24
7.20 TEMPERATURE PME# ENABLE REGISTER — INDEX 60H (IF DEV_BANK_EN IS 1) 24
7.21 TEMPERATURE INTERRUPT STATUS REGISTER — INDEX 61H (IF DEV_BANK_EN IS 0) 25
7.22 TEMPERATURE INTERRUPT STATUS REGISTER — INDEX 61H (IF DEV_BANK_EN IS 1) 25
7.23 TEMPERATURE REAL TIME STATUS REGISTER — INDEX 62H (IF DEV_BANK_EN IS 0) 26
7.24 TEMPERATURE REAL TIME STATUS REGISTER — INDEX 62H (IF DEV_BANK_EN IS 1) 26
7.25 EXTERNAL DEVICE BANK SELECT REGISTER — INDEX 65H 27
7.26 TEMPERATURE OFFSET BANK SELECT REGISTER -- INDEX 67H 27
7.27 TEMPERATURE OFFSET REGISTER -- INDEX 68H 27
7.28 LOCAL AND TEMP1 LIMIT HYSTERSIS SELECT REGISTER -- INDEX 6CH (IF DEV_BANK_EN IS 0) 28
7.29 TEMP3 AND TEMP4 LIMIT HYSTERSIS SELECT REGISTER -- INDEX 6CH (IF DEV_BANK_EN IS 1) 28
7.30 TEMP2 LIMIT HYSTERSIS SELECT REGISTER -- INDEX 6DH (IF DEV_BANK_EN IS 0) 28
7.31 TEMP5 AND TEMP6 LIMIT HYSTERSIS SELECT REGISTER -- INDEX 6DH (IF DEV_BANK_EN IS 1) 28
7.32 TEMP7 AND TEMP8 LIMIT HYSTERSIS SELECT REGISTER -- INDEX 6EH (IF DEV_BANK_EN IS 1) 29
7.33 DIODE OPEN STATUS REGISTER -- INDEX 6FH (IF DEV_BANK_EN IS 0) 29
7.34 DIODE OPEN STATUS REGISTER -- INDEX 6FH (IF DEV_BANK_EN IS 1) 29
7.35 TEMPERATURE REGISTER — INDEX 70H ~ 83H 30
7.36 TEMPERATURE FILTER SELECT REGISTER -- INDEX 8EH 31
7.37 FAN PME# ENABLE REGISTER — INDEX 90H 31
7.38 FAN INTERRUPT STATUS REGISTER — INDEX 91H 32
7.39 FAN REAL TIME STATUS REGISTER — INDEX 92H 32
7.40 FAN TYPE SELECT REGISTER -- INDEX 94H 32
7.41 FAN MODE SELECT REGISTER -- INDEX 96H 33
7.42 AUTO FAN1 AND FAN2 BOUNDARY HYSTERSIS SELECT REGISTER -- INDEX 98H 33
7.43 AUTO FAN3 AND FAN4 BOUNDARY HYSTERSIS SELECT REGISTER -- INDEX 99H 34
7.44 FAN1~FAN3 UP FAN DUTY CHANGE RATE SELECT REGISTER -- INDEX 9A 34
7.45 FAN1~FAN3 DOWN FAN DUTY CHANGE RATE SELECT REGISTER -- INDEX 9BH 34
7.46 FAN1 AND FAN2 START UP DUTY-CYCLE/VOLTAGE — INDEX 9CH 35
7.47 FAN3 AND FAN4 START UP DUTY-CYCLE/VOLTAGE — INDEX 9DH 35
7.48 FAN SMI TIME REGISTER -- INDEX 9FH 35
7.49 FAN1 INDEX A0H- AFH 36
7.50 FAN2 INDEX B0H- BFH 37
7.51 FAN3 INDEX C0H- CFH 37

Fintek Confidential
Do Not Copy!

7.52 FAN1 CONTROL REGISTER – INDEX D0H 38
7.53 FAN2 CONTROL REGISTER – INDEX D1H 38
7.54 FAN3 CONTROL REGISTER – INDEX D2H 39
7.55 FAN CONTROL REGISTER – INDEX D3H 39
7.56 FAN TABLE BANK SELECT – INDEX D5H 39
7.57 FAN T0 CONTROL REGISTER 1 – INDEX D6H 40
7.58 FAN T0 CONTROL REGISTER 2 – INDEX D7H 40
7.59 FAN T0 CONTROL REGISTER 3 – INDEX D8H 40
7.60 FAN T0 CONTROL REGISTER 4 – INDEX D9H 41
7.61 FAN T0 CONTROL REGISTER 5 – INDEX DAH 41
7.62 FAN T0 CONTROL REGISTER 6 – INDEX DCH 41
7.63 FAN T0 CONTROL REGISTER 7 – INDEX DDH 42
7.64 FAN T0 CONTROL REGISTER 8 – INDEX DEH 42
7.65 FAN T1 CONTROL REGISTER 1 – INDEX D6H 42
7.66 FAN T1 CONTROL REGISTER 2 – INDEX D7H 42
7.67 FAN T1 CONTROL REGISTER 3 – INDEX D8H 43
7.68 FAN T1 CONTROL REGISTER 4 – INDEX D9H 43
7.69 FAN T1 CONTROL REGISTER 5 – INDEX DAH 44
7.70 FAN T1 CONTROL REGISTER 6 – INDEX DCH 44
7.71 FAN T1 CONTROL REGISTER 7 – INDEX DDH 44
7.72 FAN T1 CONTROL REGISTER 8 – INDEX DEH 44
7.73 FAN T2 CONTROL REGISTER 1 – INDEX D6H 45
7.74 FAN T2 CONTROL REGISTER 2 – INDEX D7H 45
7.75 FAN T2 CONTROL REGISTER 3 – INDEX D8H 46
7.76 FAN T2 CONTROL REGISTER 4 – INDEX D9H 46
7.77 FAN T2 CONTROL REGISTER 5 – INDEX DAH 46
7.78 FAN T2 CONTROL REGISTER 6 – INDEX DCH 46
7.79 FAN T2 CONTROL REGISTER 7 – INDEX DDH 47
7.80 FAN T2 CONTROL REGISTER 8 – INDEX DEH 47
7.81 FAN T3 CONTROL REGISTER 1 – INDEX D6H 47
7.82 FAN T3 CONTROL REGISTER 2 – INDEX D7H 48
7.83 FAN T3 CONTROL REGISTER 3 – INDEX D8H 48
7.84 FAN T3 CONTROL REGISTER 4 – INDEX D9H 48
7.85 FAN T3 CONTROL REGISTER 5 – INDEX DAH 49
7.86 FAN T3 CONTROL REGISTER 6 – INDEX DCH 49
7.87 FAN T3 CONTROL REGISTER 7 – INDEX DDH 49

Fintek Confidential
Do Not Copy!

7.88 FAN T3 CONTROL REGISTER 8 – INDEX DEH 50
7.89 FAN T4 CONTROL REGISTER 1 – INDEX D6H 50
7.90 FAN T4 CONTROL REGISTER 2 – INDEX D7H 50
7.91 FAN T4 CONTROL REGISTER 3 – INDEX D8H 51
7.92 FAN T4 CONTROL REGISTER 4 – INDEX D9H 51
7.93 FAN T4 CONTROL REGISTER 5 – INDEX DAH 51
7.94 FAN T4 CONTROL REGISTER 6 – INDEX DCH 52
7.95 FAN T4 CONTROL REGISTER 7 – INDEX DDH 52
7.96 FAN T4 CONTROL REGISTER 8 – INDEX DEH 52
7.97 FAN T5 CONTROL REGISTER 1 – INDEX D6H 52
7.98 FAN T5 CONTROL REGISTER 2 – INDEX D7H 53
7.99 FAN T5 CONTROL REGISTER 3 – INDEX D8H 53
7.100 FAN T5 CONTROL REGISTER 4 – INDEX D9H 54
7.101 FAN T5 CONTROL REGISTER 5 – INDEX DAH 54
7.102 FAN T5 CONTROL REGISTER 6 – INDEX DCH 54
7.103 FAN T5 CONTROL REGISTER 7 – INDEX DDH 54
7.104 FAN T5 CONTROL REGISTER 8 – INDEX DEH 55
7.105 FAN T6 CONTROL REGISTER 1 – INDEX D6H 55
7.106 FAN T6 CONTROL REGISTER 2 – INDEX D7H 55
7.107 FAN T6 CONTROL REGISTER 3 – INDEX D8H 56
7.108 FAN T6 CONTROL REGISTER 4 – INDEX D9H 56
7.109 FAN T6 CONTROL REGISTER 5 – INDEX DAH 56
7.110 FAN T6 CONTROL REGISTER 6 – INDEX DCH 57
7.111 FAN T6 CONTROL REGISTER 7 – INDEX DDH 57
7.112 FAN T6 CONTROL REGISTER 8 – INDEX DEH 57
7.113 FAN T7 CONTROL REGISTER 1 – INDEX D6H 57
7.114 FAN T7 CONTROL REGISTER 2 – INDEX D7H 58
7.115 FAN T7 CONTROL REGISTER 3 – INDEX D8H 58
7.116 FAN T7 CONTROL REGISTER 4 – INDEX D9H 59
7.117 FAN T7 CONTROL REGISTER 5 – INDEX DAH 59
7.118 FAN T7 CONTROL REGISTER 6 – INDEX DCH 59
7.119 FAN T7 CONTROL REGISTER 7 – INDEX DDH 59
7.120 FAN T7 CONTROL REGISTER 8 – INDEX DEH 60
7.121 FAN T8 CONTROL REGISTER 1 – INDEX D6H 60
7.122 FAN T8 CONTROL REGISTER 2 – INDEX D7H 60
7.123 FAN T8 CONTROL REGISTER 3 – INDEX D8H 61

Fintek Confidential
Do Not Copy!

7.124 FAN T8 CONTROL REGISTER 4 – INDEX D9H 61
7.125 FAN T8 CONTROL REGISTER 5 – INDEX DAH 61
7.126 FAN T8 CONTROL REGISTER 6 – INDEX DCH 62
7.127 FAN T8 CONTROL REGISTER 7 – INDEX DDH 62
7.128 FAN T8 CONTROL REGISTER 8 – INDEX DEH 62

8. ELECTRICAL CHARACTERISTIC 63

8.1 ABSOLUTE MAXIMUM RATINGS 63
8.2 DC CHARACTERISTICS 63
8.3 AC CHARACTERISTICS 65

9. ORDERING INFORMATION 65

10. PACKAGE DIMENSIONS 66

Fintek Confidential
Do Not Copy!

1. General Description

F75377 is a system hardware monitoring and automatic fan speed controlling IC specific designed for graphic cards and PC etc. The F75377 can monitor several critical hardware parameters of the system, including temperatures and fan speeds which are very important for the system to work stably and properly.

The chip can monitor up to 3 fan tachometer inputs and 9 temperature inputs (6 remotes from external sensor devices by I2C/SST interface, 2 remotes from external sensor D1+/D2+ and 1 local sensor). The remote temperature sensor can be performed by transistor 2N3906 and CPU/GPU thermal diode. The F75377 also supports beta-compensation algorithm (BJT Model) for new generational 45nm CPU.

In fan control machine, the F75377 can provide automatic fan speed control so that the system can operate at the minimum acoustic noise. This chip supports not only PWM duty mode (PWMOUT) for fan speed control. The F75377 supports Heceta-like function; the fan speed control can follow one or more different temperature inputs. Besides 3 sets temperature inputs, also can read temperature from other devices by I2C, SST and PECI interfaces. The I2C Master supports general temperature sensor device protocol, AMD TSI protocol and next generational Intel chipset MCTP SMBus protocol. Others, internal oscillator was built in this chip. Also the users can set up the upper and lower limits (alarm thresholds) of all monitored parameters and the F75377 can also issue warning messages for system protection when there is something wrong with monitored items.

Through the BIOS or application software, the users can read all the monitored parameters of system all the time. And a pop-up warning can be also activated when the monitored item was out of the proper/pre-setting range. The F75377 is in the green package of 150mil 20-pin SSOP and powered by 3.3V.

2. Features

- Provide 1 on-chip local and 2 remote temperature sensors
  - Accuracy ±1 °C from +60°C to +100°C on remote channel
  - Accuracy ±3 °C from +60°C to +100°C on local channel
- Support 6 temperature inputs from external sensor devices (ex: F75395/F75393)
- Beta-compensation support for new generational CPU.
- Up to 3 fan speed monitoring inputs and 3 automatic fan speed control

Fintek Confidential Do Not Copy!

- Fan-Temperature mapping selection support.
- Provide PME protection signals
- Programmable limited and setting points for all monitored items
- Support 4 GPIO pins for flexible application
- Support PWM fan control
- 4-pins PWM fan support
- PECI interface for Intel CPU temperature sensing
- SST Master interfaces for external devices' temperature sensing
- SST Slave interface for Intel Chipset
- 2-wire I2C Master/Slave interfaces
- I2C protocol support AMD TSI and Intel MCTP
- I2C to SST Master bridge
- V_{CC}3V operation and 20-SSOP Green Package(150mil)

3. Key Specifications

■	Supply Voltage	3.0V to 3.6V
■	Operating Supply Current	1mA typ.
■	Measured Range	-40 ~ 127 ^{o}C
■	Remote Diode Temperature Accuracy	±1°C from +60°C to +100°C
■	Local Temperature Accuracy	±3°C from +60°C to +100°C

Fintek Confidential Do Not Copy!

4. Pin Configuration

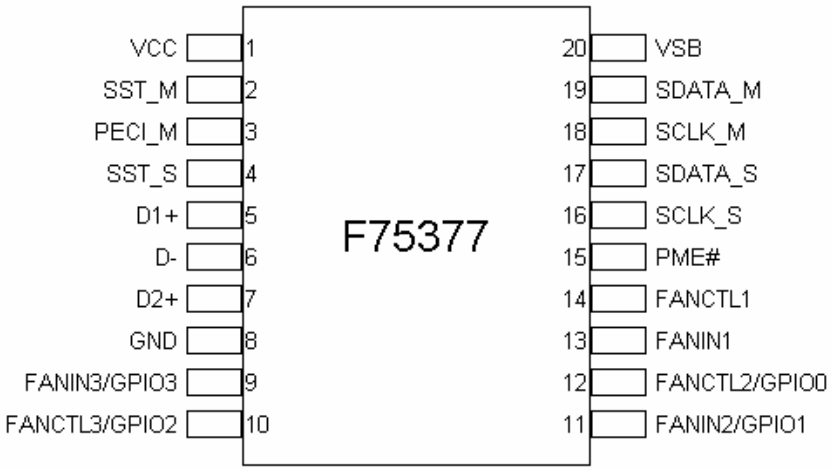

5. Pin Description

I_{Lv}/O_{D8-S1}	- Low level bi-directional pin (VIH → 0.9V, VIL → 0.6V.). Output with 8mA drive and 1mA sink capability.
OOD_{12}	- can select to OD or OUT by register, with 12 mA source-sink capability.
AOUT	- Output pin(Analog).
OD_{12}	- Open-drain output pin with 12 mA sink capability.
OD_{12-5V}	Open-drain output pin with 12 mA sink capability, 5V tolerance.
IN_{ts5V}	- TTL level input pin and schmitt trigger, 5V tolerance.
AIN	- Input pin(Analog).
P	- Power.

5.1. Power Pin

Pin No.	Pin Name	Type	Description
1	VCC	P	3.3V power supply voltage input
20	VSB	P	3.3V standby power supply voltage input
8	GND	P	GND

5.2. Monitoring Items and Fan Speed Control

Pin No.	Pin Name	Type	PWR	Description
2	SST_M	I_{LV}/O_{D8-S1}	VCC	Intel SST master hardware monitor interface
3	PECI	I_{LV}/O_{D8-S1}	VCC	Intel PECI hardware monitor interface.
4	SST_S	I_{LV}/O_{D8-S1}	VCC	Intel SST slave hardware monitor interface
5	D1+	AOUT AIN	VCC	Positive connection to remote temperature sensor
6	D-	AGND	VCC	Negative connection to remote temperature sensor
7	D2+	AOUT AIN	VCC	Positive connection to remote temperature sensor
9	FANIN3	IN_{ts5V}	VCC	0V to +3.3V amplitude fan tachometer input.
	GPIO3	IN_{ts5V}/OD_{12}		General purpose I/O pin. Default Open drain
10	FANCTL3	OOD_{12}	VCC	Use PWM duty cycle to control fan3 speed.
		AOUT		Use linear voltage output (0~3.3V) to control fan3 speed.
	GPIO2	IN_{ts5V}/OD_{12}		General purpose I/O pin. Default Open drain
11	FANIN2	IN_{ts5V}	VCC	0V to +3.3V amplitude fan tachometer input.
	GPIO1	IN_{ts5V}/OD_{12}		General purpose I/O pin. Default Open drain
12	FANCTL2	OOD_{12}	VCC	Use PWM duty cycle to control fan2 speed.
		AOUT		Use linear voltage output (0~3.3V) to control fan2 speed.
	GPIO0	IN_{ts5V}/OD_{12}		General purpose I/O pin. Default Open drain
13	FANIN1	IN_{ts5V}	VCC	0V to +3.3V amplitude fan tachometer input.
14	FANCTL1	OOD_{12}	VCC	Use PWM duty cycle to control fan1 speed.
		AOUT		Use linear voltage output (0~3.3V) to control fan1 speed.
15	PME#	OD_{12-5v}	VCC	System management interrupt (Pure open drain). This pin will be active low when there is something wrong with voltage, temperature and fan. See register description index 33h
16	SCLK_S	IN_{ts5V}	VCC	Slave serial bus clock
17	SDATA_S	IN_{ts5V}/OD_{12}	VCC	Slave serial bus data
18	SCLK_M	IN_{ts5V}	VCC	Master serial bus clock
19	SDATA_M	IN_{ts5V}/OD_{12}	VCC	Master serial bus data

Fintek Confidential Do Not Copy

6. Function Description

F75377 is a system hardware monitoring and automatic fan speed controlling IC specific designed for graphic cards and PC etc. The F75377 can monitor several critical hardware parameters of the system, including temperatures and fan speeds which are very important for the system to work stably and properly.

The chip can monitor up to 3 fan tachometer inputs and 9 temperature inputs (6 remotes from external sensor devices by I2C/SST interface, 2 remotes from external sensor D1+/D2+ and 1 local sensor). The remote temperature sensor can be performed by transistor 2N3906 and CPU/GPU thermal diode. The F75377 also supports beta-compensation algorithm (BJT Model) for new generational 45nm CPU.

In fan control machine, the F75377 can provide automatic fan speed control so that the system can operate at the minimum acoustic noise. This chip supports not only PWM duty mode (PWMOUT) for fan speed control. The F75377 supports Heceta-like function; the fan speed control can follow one or more different temperature inputs. Besides 3 sets temperature inputs, also can read temperature from other devices by I2C, SST and PECI interfaces. The I2C Master supports general temperature sensor device protocol, AMD TSI protocol and next generational Intel chipset MCTP SMBus protocol. Others, internal oscillator was built in this chip. Also the users can set up the upper and lower limits (alarm thresholds) of all monitored parameters and the F75377 can also issue warning messages for system protection when there is something wrong with monitored items.

Fintek Confidential
Do Not Copy!

6.1 Access Interface

The F75377 can be connected to a compatible 2-wire serial system management bus as a slave device under the control of the master device, using two device terminals SCL and SDA. The F75377 supports I2C protocol of, “Write Byte”, “Read Byte”, both with or without Packet Error checking (PEC) which is calculated using CRC-8. For detail information about PEC, please check I2C specification. F75377 also supports Alert Response Address (ARA) protocol.

The operation of the protocol is described with details in the following sections.

(a) I2C write to internal address register followed by the data byte

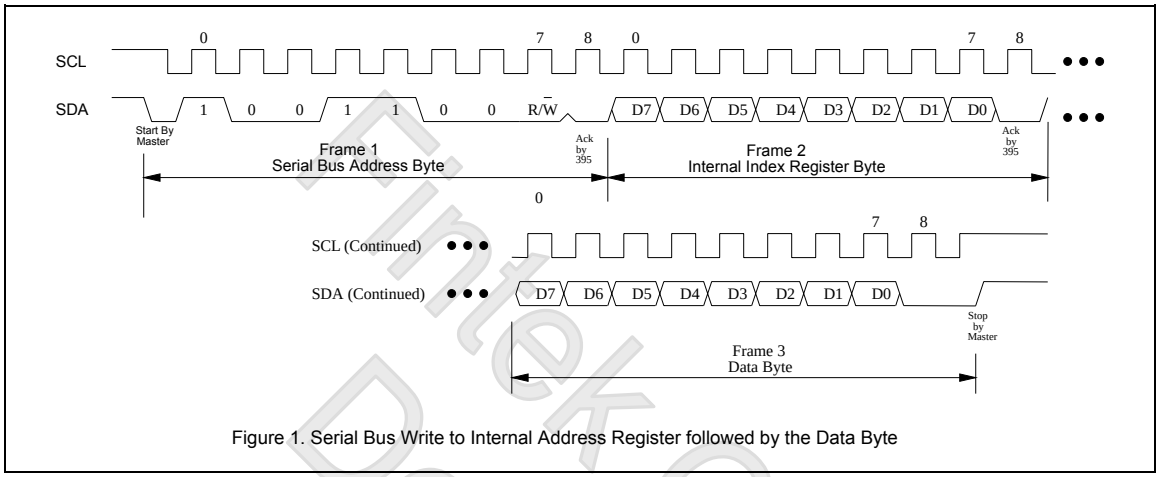

Figure 1. Serial Bus Write to Internal Address Register followed by the Data Byte

(b) Serial bus write to internal address register only

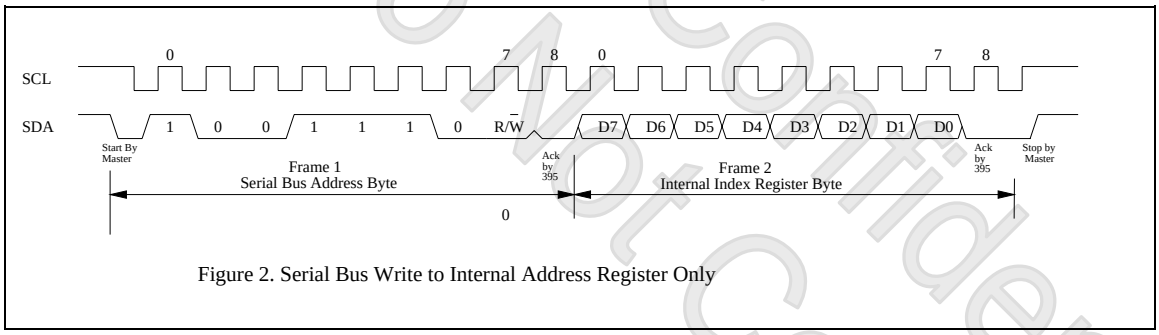

Figure 2. Serial Bus Write to Internal Address Register Only

(c) Serial bus read from a register with the internal address register prefer to desired location

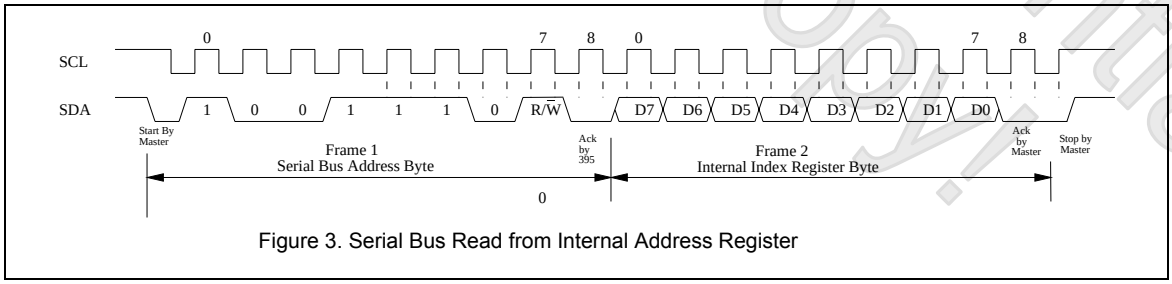

Figure 3. Serial Bus Read from Internal Address Register

6.2 Temperature Monitoring

The F75377 monitors local and 2 remote temperature sensors. Both can be measured from -40°C to 127°C.

The temperature format is as the following table:

Temperature (High Byte)	Digital Output	Temperature (Low Byte)	Digital Output
0°C	0000 0000	0°C	000 0 0000
1°C	0000 0001	0.125°C	001 0 0000
25°C	0001 1001	0.250°C	010 0 0000

Fintek Confidential Do Not Copy!

50°C	0011 0010	0.375°C	011 0 0000
75°C	0100 1011	0.500°C	100 0 0000
90°C	0101 1010	0.625°C	101 0 0000
100°C	0110 0100	0.750°C	110 0 0000
140°C	1000 1100	0.875°C	111 0 0000

Remote-sensor transistor manufacturers

Manufacturer	Model Number
Panasonic	2SB0709 2N3906
Philips	PMBT3906

6.3 Beta Compensation

The F75377 is configured to detect the temperature of diodes (e.g. 2N3906) or CPU thermal diodes. The diode can be connected in different way as below Figure.

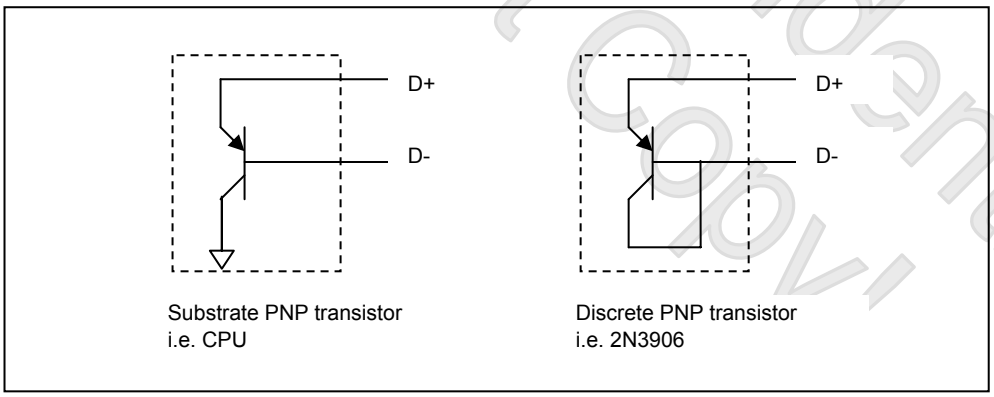

The basic of the temperature sensor follows mathematical formula as below:

$$\Delta V_{BE} = \frac{KT}{q} \times \ln \frac{Ie_1}{Ie_2} = \frac{KT}{q} \times \ln \frac{\left(\frac{1+\beta_1}{\beta_1}\right) Ic_1}{\left(\frac{1+\beta_2}{\beta_2}\right) Ic_2}$$

The F75377 measures temperature from the thermal diodes by the basic. In traditional case, the F75377 outputs dual currents to a thermal diode. Then the F75377 calculates the absolute temperature by △VBE. For discrete transistor (i.e. 2N3906), the beta is normally very high such that the percent change in beta is very small. For example, 15% variation in beta for two forced IE currents and the beta is 50 would contribute about 0.32℃ error per 100℃. For Substrate PNP transistor (i.e. CPU), the beta is very small such that the proportional beta variation will very high, and it will cause large error in temperature

Fintek Confidential
Do Not Copy!

measurement. For example, 15% variation in beta for two forced IE currents and the beta is 0.5 would contribute about 11.12℃ error per 100℃.

In Order to solve the second issue, the F75377 provides a beta compensation solution for accurate temperature sensing. The F75377 can support the beta range over 0.2 for beta compensation. In this new method, the F75377 will provide two IE currents, and feedback two IB currents. The F75377 will auto-adjust IE (IE1 and IE2) current and feedback IB (IB1 and IB2) promptly for getting proper IC proportion (IC1/ IC2), then calculates the accurate temperature. This algorithm of beta compensation is suitable for substrate transistor or new generational CPU (i.e. 45nm CPU) because small beta and high proportional beta variation.

6.4 PECI/SST Master

F75377 Support 6 external device inputs for temperature reading by SST and pass to host by I2C. It's really a SST to I2C bridge IC for some specific SST temperature sensors' application. User can ready SST temperature sensor by F75377 bridge function. For instance, user would like to read an external SST temperature sensor by F75377. She could follow below list to read the SST Device Temperature.

If the address/index of SST device is 49h/00h.Before you read the temperature from SST device. You should do below list:

1. write register 49h to register 40h (Define external device0 address)
2. write 00h to register 48h (Define external device0 index)
3. write "1" to register 50h bit 0 (Enable external device0)
4. read register 78h to get the temperature value of SST device

Totally the F75377 can support 6 external device inputs by SST master. About the detail setting of register, please refer the register description.

Others, the F75377 also support PECI Master for CPU temperature reading. Than the fan control machine can implement the Fan to cool down CPU temperature Please refer the register description for detail.

6.5 Fan Control Machine

Fan speed count

Inputs are provided by the signals from fans equipped with tachometer outputs. The level of these signals should be set to TTL level, and maximum input voltage cannot be over 5V. If the input signals from the tachometer outputs are over the 5V, the external trimming circuit should be added to reduce the voltage

Fintek Confidential Do Not Copy!

to obtain the input specification. The normal circuit and trimming circuits are shown as follows:

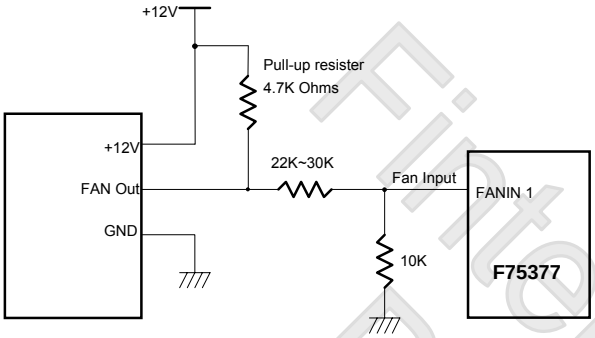

Fan with Tach Pull-Up to +12V, or Totern-Pole Output and Register Attenuator

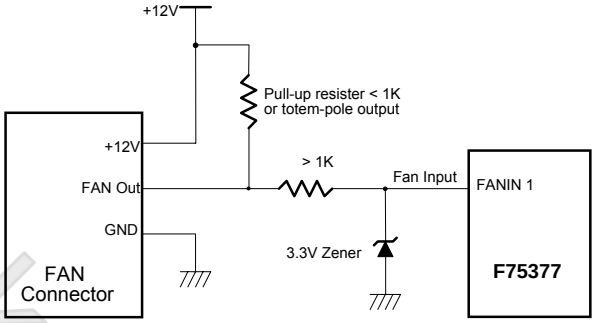

Fan with Tach Pull-Up to +12V, or Totem-Pole Putput and Zener Clamp

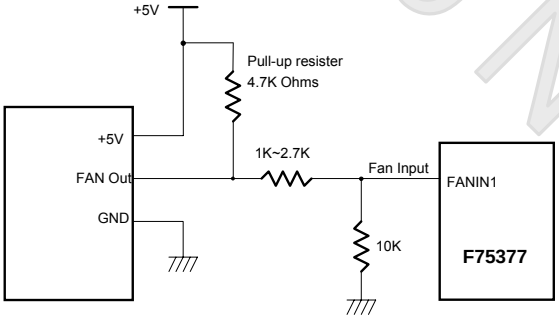

Fan with Tach Pull-Up to +5V, or Totern-Pole Output and Register Attenuator

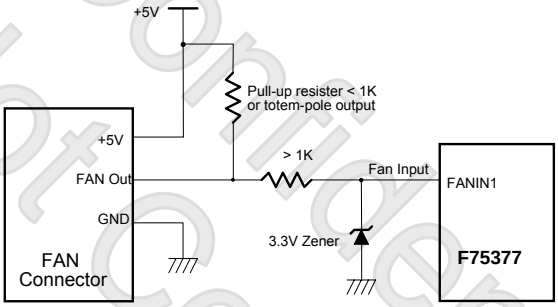

Fan with Tach Pull-Up to +5V, or Totem-Pole Putput and Zener Clamp

Determine the fan counter according to:

$$Count = \frac{1.5 \times 10^6}{RPM}$$

In other words, the fan speed counter has been read from register, the fan speed can be evaluated by the following equation. As for fan, it would be best to use 2 pulses tachometer output per round.

$$RPM = \frac{1.5 \times 10^6}{Count}$$

Fan speed control

The F75377 provides PWM DUTY fan speed control method. The duty cycle of PWM can be programmed by a 8-bit register. The default duty cycle is set to 100%, that is, the default 8-bit registers is set to FFh. The expression of duty can be represented as follows.

$$\text{Duty_cycle}(\%) = \frac{\text{Programmed 8bit Register Value}}{255} \times 100\%$$

Fintek Confidential
Do Not Copy!

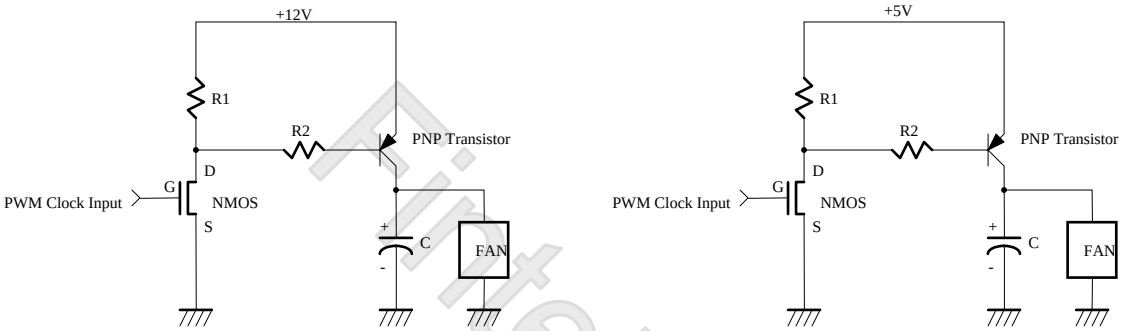

Fan speed control mechanism

There are some modes to control fan speed and they are 1.Stage auto mode, 2. Linear auto mode. More detail, please refer the description of registers.

Stage auto mode

At this mode, the F75377 provides automatic fan speed control related to temperature variation of CPU/GPU or the system. The F75377 can provide two temperature boundaries and three intervals, and each interval has its related fan speed PWM duty. All these values should be set by BIOS first. Take figure as example. When temperature boundaries are set as 45 and 75°C and there are three intervals. The related desired fan speed for each interval are 40%, 80% and 100% (fixed). When the temperature is within 45~75'C, the fan speed will follow 80% PWM duty and that define in registers. It can be said that the fan will be turned on with a specific speed set by BIOS and automatically controlled with the temperature variation. The F75377 will take charge of all the fan speed control and need no software support.

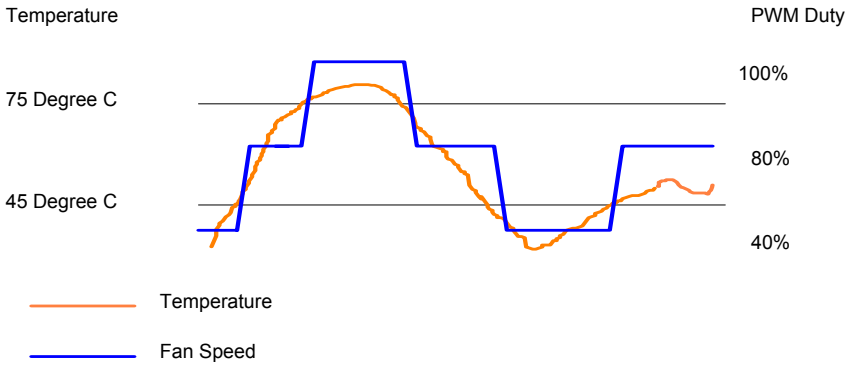

Below is a sample for Stage auto mode: Set temperature as 60°C, 40°C and Duty as 100%, 70%, 50%

Fintek Confidential
Do Not Copy!

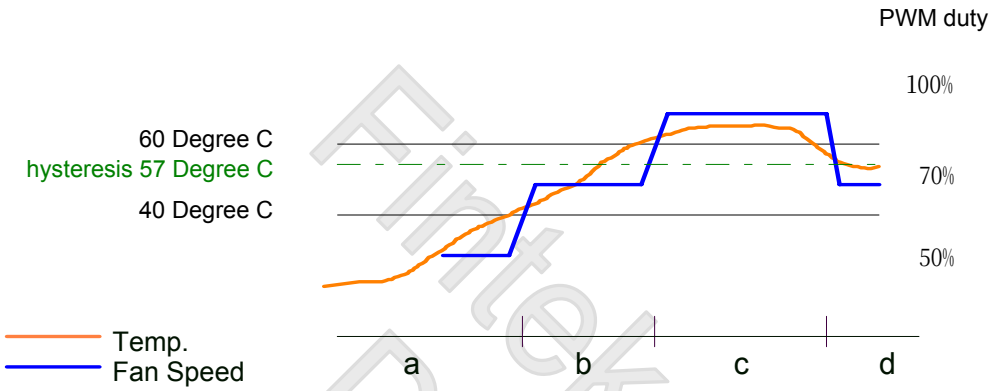

Once temp. is under 40°C, the lowest fan speed keeps 50% PWM duty. Once temp. is over 40°C,60°C, the fan speed will vary from 70% to 100% PWM duty and increase with temp. level. Once temp. keeps in 55°C, fan speed keeps in 70% PWM duty. If set the hysteresis as 3°C (default 4°C), once temp reduces under 57°C, fan speed reduces to 70% PWM duty and stays there.

Linear auto mode

Otherwise, F75377 supports linear auto mode. Below has a example to describe this mode. More detail, please refer the register description.

Set temperature as 70°C, 40°C and Duty as 100%, 70%, 40%

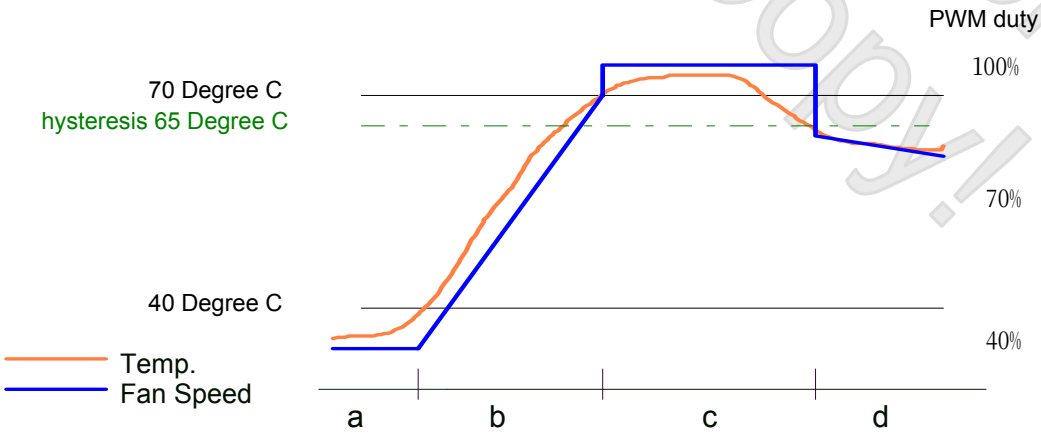

Once temp. is under 40°C, the lowest fan speed keeps 40% PWM duty. Once temp. is over 40°C and under 70°C, the fan speed will vary from 40% to 70% PWM duty and linearly increase with temp. variation. The temp.-fan speed monitoring and flash interval is 1sec. Once temp. goes over 70°C, fan speed will directly increase to 100% PWM duty (full speed). If set the hysteresis as 5°C(default is 4°C), once temp reduces under 65°C (not 70°C), fan speed reduces from 100% PWM duty and decrease linearly with temp..

Fintek Confidential Do Not Copy!

6.6 PCB Layout Guide

PCB can be electrically noisy environments, and the F75377 is measuring very small voltage from the remote sensor, so care must be taken to minimize noise which is occurred at the sensor inputs. The following guideline should be taken to reduce the measurement error of the temperature sensors:

Place the F75377 as close as practical to the remote sensing diode. In noisy environments, such as a computer main-board, the distance can be 4 to 8 inches. (typ). This length can be increased if the worst noise sources are avoided. Noise sources generally include clock generators, CRTs, memory buses and PCI/ISA bus etc.

Route the D+ and D- tracks close together, in parallel, with grounded guard tracks on each side. Provide a ground plane under the tracks if possible. Do not route D+ & D- lines next to the deflection coil of the CRT. And also don't route the trace across fast digital signals which can easily induce bigger error.

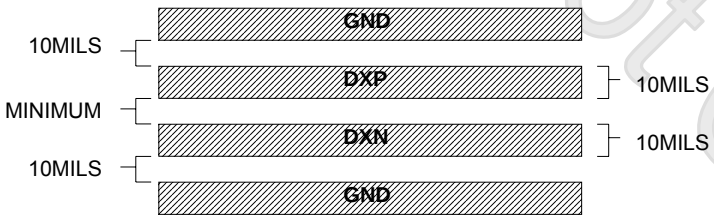

Use wide tracks to minimize inductance and reduce noise pickup. 10 mil track minimum width and spacing is recommended.

Try to minimize the number of copper/solder joints, which can cause thermocouple effects. Where copper/solder joints are used, make sure that they are in both the D+ and D- path and at the same temperature. Thermocouple effects should not be a major problem as 1℃ corresponds to about 200μV. It means that a copper-solder thermocouple exhibits 3μV/℃, and takes about 200μV of the voltage error at D+ & D- to cause a 1℃ measurement error. Adding a few thermocouples causes a negligible error.

Place a 0.1μF bypass capacitor close to the VCC pin. In very noisy environments, place an external 2200pF input filter capacitors across D+, D- close to the F75377.

If the distance to the remote sensor is more than 8 inches, the use of twisted pair cable is recommended. It will work up to around 6 to 12 feet.

Because the measurement technique uses switched current sources, excessive cable and/or filter capacitance will affect the measurement accuracy. When using long cables, the filter capacitor may be reduced or removed. Cable resistance can also induce errors. 1 Ω series resistance introduces about 0.5℃ error.

Fintek Confidential Do Not Copy!

7. Register Description

7.1 Configuration Register — Index 01h

Bit	Name	R/W	Default	Description
7	-	R	0	Reserved
6	-	R	0	Reserved
5-4	-	R	0	Reserved
3	-	R/W	0	Reserved (Fintek use only)
2	-	R/W	0	Reserved
1	FAN_START	R/W	1	Set one to enable startup of fan monitoring operations; a zero puts the part in standby mode.
0	T_START	R/W	1	Set one to enable startup of temperature monitoring operations; a zero puts the part in standby mode.

7.2 Configuration Register — Index 0Ah

Bit	Name	R/W	Default	Description
7	-	-	0	Reserved
6	SST_3V_EN	R/W	0	Enable SST master to output 3 volt data
5	IIR_EN	R/W	1	Set 1 to enable IIR for PECI reading. The reading will be more stable.
4	SST_EN	R/W	0	Enable SST slave
3-2	VTT_SEL	R/W	0	PECI (Vtt) voltage select. 00: Vtt is 1.3V 01: Vtt is 1.2V 10: Vtt is 1.10V 11: Vtt is 1.00V
1-0	-	R	0	Reserved

Fintek Confidential Do Not Copy!

7.3 TCCA TEMP Register — Index 0Ch

Bit	Name	R/W	Default	Description
7	TCCA_TEMP	R/W	0	TCC Activation Temperature. The absolute value of CPU temperature is calculated by the equation: CPU_TEMP = TCCA_TEMP + PECI Reading. The range of this register is 0 ~ 255.

7.4 SST Address Register — Index 0Dh

Bit	Name	R/W	Default	Description
7	-	R	0	Reserved
6-0	SST_ADDR	R/W	4C	SST slave address

7.5 PECI Slope Register — Index 0Eh

Bit	Name	R/W	Default	Description
7-4	-	R	0	Reserved
3-0	SCALE	R/W	0	This register is used to control the PECI reading slope. See also PECI_SCALE_ADD register. 000: The real value is the PECI reading. 001: The real value is (1 ± 1/2) PECI reading. 010: The real value is (1 ± 1/4) PECI reading. 011: The real value is (1 ± 1/8) PECI reading. 100: The real value is (1 ± 1/16) PECI reading. 101: The real value is (1 ± 1/32) PECI reading. 110: The real value is (1 ± 1/64) PECI reading. 111: The real value is (1 ± 1/128) PECI reading.

7.6 Configuration Register — Index 11h

Bit	Name	R/W	Default	Description
7	ARA_EN	R/W	0	Enable I2C response ARA

Fintek Confidential Do Not Copy!

6	PME_INV	R/W	0	0: PME is low active 1:PME is high active
5	PME_MODE	R/W	0	0: level mode 1: pulse mode (120us)
4	GLOBAL_PME_EN	R/W	1	Global PME enable
3-0	-	R	0	Reserved

7.7 External Device Address Register - Index 40h ~ 46h

Bit	Name	R/W	Default	Description
7-0	DEV_ADDR	R/W	0	Device address of device0 ~ device6 (device 6 for PECI pin use, default address is 40h)

7.8 External Device Index Register - Index 48h ~ 4Eh

Bit	Name	R/W	Default	Description
7-0	DEV_INDEX	R/W	0	Device index of device0 ~ device6 (PECI 00h)

7.9 External Device Data Register - Index 4F

Bit	Name	R/W	Default	Description
7-0	DEV_DATA	R/W	0	Data used to write to I2C devices or read from I2C devices

7.10 External Device Enable Register - Index 50h

Bit	Name	R/W	Default	Description
7	PECI_CRC_UPDATE	R/W	0	0: The reading of T1 will be updated with 8'hBB when PECI CRC error 1: The reading of T1 will not be updated when PECI CRC error
6-0	DEV_EN	R/W	0	External device enable. (Bit mask) Bit 0 for External device0 Bit 1 for External device2 ……

7.11 External Device Select Register - Index 51h

Bit	Name	R/W	Default	Description
7-6	-	R	-	Reserved
5-0	DEV_SEL	R/W	0	0:SST, 1:I2C (Bit 0 is for device0, Bit 1 is for device1…etc.)

Fintek Confidential Do Not Copy!

7.12 External Device Monitoring Frequency Select Register 1 - Index 52h

Bit	Name	R/W	Default	Description
7-6	CYC_SEL3	R/W	2'b11	Select device monitoring cycle:
5-4	CYC_SEL2	R/W	2'b11	2'b11: 8hz
3-2	CYC_SEL1	R/W	2'b11	2'b10: 4hz
1-0	CYC_SEL0	R/W	2'b11	2'b01: 2hz 2'b00: 1hz

7.13 External Device Monitoring Frequency Select Register 2 - Index 53h

Bit	Name	R/W	Default	Description
7-6	Reserved	R	0	Select device monitoring cycle:
5-4	CYC_SEL6	R/W	2'b11	2'b11: 8hz
3-2	CYC_SEL5	R/W	2'b11	2'b10: 4hz
1-0	CYC_SEL4	R/W	2'b11	2'b01: 2hz 2'b00: 1hz

7.14 I2C Master Control Register - Index 54h

Bit	Name	R/W	Default	Description
7-6	I2C_DEV_ADDR	R/W	0	I2C device address to be written or read
0	WR_N / RD	R	0	Set 0 to start I2C byte write. Set 1 to start I2C byte read

7.15 Interface Control Register - Index 55h

Bit	Name	R/W	Default	Description
7	RESET_PECI_EN	R/W	0	Set this bit to reset PECI device, this bit will be cleared after reset
6	RESET_SST_EN	R/W	0	Set this bit to reset SST device, this bit will be cleared after reset
5	-	R/W	0	Reserved
4-2	RESET_DEV_SEL	R/W	0	Select which SST device to be reset
1	PEC_EN	R/W	0	Enable PEC (CRC) of I2C devices
0	SR_EN	R/W	0	Enable repeat start of I2C devices

7.16 I2C Master Status Register - Index 56h

Bit	Name	R/W	Default	Description

Fintek Confidential Do Not Copy!

5	ARBIT_LOST	WC	0	I2C master arbitration lost status
4	NACK_ERR	WC	0	I2C master NACK with error status
3	I2CM_TIMEOUT	WC	0	I2C master timeout status
2	I2CM_PEC_ERR	WC	0	I2C master PEC error status
1	FINISH	WC	0	Finish I2C byte read or byte write status
0	BUS_BUSY	R	0	Bus busy status

7.17 Fan Pin Function Select and Pin Status Register - Index 57h

Bit	Name	R/W	Default	Description
7	FANIN3	R	-	Pin status
6	FANIN2	R	-	Pin status
5	FANCTRL3	R	-	Pin status
4	FANCTRL2	R	-	Pin status
3-0	FAN_PIN_MODE	R/W	0	0: FAN function 1: GPIO

7.18 Fan GPIO Function Control Register - Index 58h

Bit	Name	R/W	Default	Description
7-4	FAN_GPOUT_MODE	R/W	0	1: Push Pull 0:Open drain
3-0	FAN_GPOUT	R/W	0	GPIO OUTPUT DATA

7.19 Temperature PME# Enable Register — Index 60h (If DEV_BANK_EN is 0)

Bit	Name	R/W	Default	Description
7-3	-	R/W	0	Reserved
2	EN_ T2_EXC_PME	R/W	0	A one enables the corresponding interrupt status bit for PME# interrupt.
1	EN_ T1_EXC_PME	R/W	0	A one enables the corresponding interrupt status bit for PME# interrupt
0	EN_L_EXC_PME	R/W	0	A one enables the corresponding interrupt status bit for PME# interrupt.

7.20 Temperature PME# Enable Register — Index 60h (If DEV_BANK_EN is 1)

Bit	Name	R/W	Default	Description
7-6	-	R/W	0	Reserved
5	EN_ T8_ EXC_PME	R/W	0	A one enables the corresponding interrupt status bit for PME# interrupt

Fintek Confidential Do Not Copy!

4	EN_ L7_ EXC_PME	R/W	0	A one enables the corresponding interrupt status bit for PME# interrupt.
3	EN_ T6_EXC_PME	R/W	0	A one enables the corresponding interrupt status bit for PME# interrupt
2	EN_ T5_EXC_PME	R/W	0	A one enables the corresponding interrupt status bit for PME# interrupt.
1	EN_ T4_EXC_PME	R/W	0	A one enables the corresponding interrupt status bit for PME# interrupt
0	EN_T3_EXC_PME	R/W	0	A one enables the corresponding interrupt status bit for PME# interrupt.

7.21 Temperature Interrupt Status Register — Index 61h (If DEV_BANK_EN is 0)

Bit	Name	R/W	Default	Description
7	DEV_T_EXC_STS	R	0	A one indicates at least one of TEMP3~TEMP8 temperature sensor has exceeded high limit or below the “high limit –hysteresis” limit. Write 1 to clear this bit, write 0 will be ignored.
6-3	-	R	0	Reserved
2	T2_EXC _STS	R/W	0	A one indicates TEMP2 temperature sensor has exceeded high limit or below the “high limit –hysteresis” limit. Write 1 to clear this bit, write 0 will be ignored.
1	T1_EXC _STS	R/W	0	A one indicates TEMP1 temperature sensor has exceeded high limit or below the “high limit –hysteresis” limit. Write 1 to clear this bit, write 0 will be ignored.
0	LOCAL_EXC _STS	R/W	0	A one indicates temperature sensor (local temperature) has exceeded the high limit or below the “high limit –hysteresis” limit. Write 1 to clear this bit, write 0 will be ignored.

7.22 Temperature Interrupt Status Register — Index 61h (If DEV_BANK_EN is 1)

Bit	Name	R/W	Default	Description
7-6	-	R	0	Reserved
5	T8_EXC _STS	R/W	0	A one indicates TEMP8 temperature sensor has exceeded high limit or below the “high limit –hysteresis” limit. Write 1 to clear this bit, write 0 will be ignored.
4	T7_EXC _STS	R/W	0	A one indicates TEMP7 temperature sensor has exceeded high limit or below the “high limit –hysteresis” limit. Write 1 to clear this bit, write 0 will be ignored.

Fintek Confidential Do Not Copy!

3	T6_EXC _STS	R/W	0	A one indicates TEMP6 temperature sensor has exceeded high limit or below the “high limit –hysteresis” limit. Write 1 to clear this bit, write 0 will be ignored.
2	T5_EXC _STS	R/W	0	A one indicates TEMP5 temperature sensor has exceeded high limit or below the “high limit –hysteresis” limit. Write 1 to clear this bit, write 0 will be ignored.
1	T4_EXC _STS	R/W	0	A one indicates TEMP4 temperature sensor has exceeded high limit or below the “high limit –hysteresis” limit. Write 1 to clear this bit, write 0 will be ignored.
0	T3_EXC _STS	R/W	0	A one indicates TEMP3 temperature sensor has exceeded high limit or below the “high limit –hysteresis” limit. Write 1 to clear this bit, write 0 will be ignored.

7.23 Temperature Real Time Status Register — Index 62h (If DEV_BANK_EN is 0)

Bit	Name	R/W	Default	Description
7	DEV_T_EXC	R	0	Set when one of TEMP3~TEMP8 exceeds the high limit. Clear when the TEMP3~TEMP8 is below the “high limit –hysteresis” temperature.
6-3	-	R	0	Reserved
2	T2_EXC	R	0	Set when the TEMP2 exceeds the high limit. Clear when the TEMP2 is below the “high limit –hysteresis” temperature.
1	T1_EXC	R	0	Set when the TEMP1 exceeds the high limit. Clear when the TEMP1 is below the “high limit –hysteresis” temperature.
0	LOCAL_EXC	R	0	Set when the local temperature exceeds the high limit. Clear when the local temperature is below the “high limit –hysteresis” temperature.

7.24 Temperature Real Time Status Register — Index 62h (If DEV_BANK_EN is 1)

Bit	Name	R/W	Default	Description
7-6	-	R	0	Reserved
5	T8_EXC	R	0	Set when the TEMP8 exceeds the high limit. Clear when the TEMP8 is below the “high limit –hysteresis” temperature.
4	T7_EXC	R	0	Set when the TEMP7 exceeds the high limit. Clear when the TEMP7 is below the “high limit –hysteresis” temperature.

Fintek Confidential Do Not Copy!

3	T6_EXC	R	0	Set when the TEMP6 exceeds the high limit. Clear when the TEMP6 is below the “high limit –hysteresis” temperature.
2	T5_EXC	R	0	Set when the TEMP5 exceeds the high limit. Clear when the TEMP5 is below the “high limit –hysteresis” temperature.
1	T4_EXC	R	0	Set when the TEMP4 exceeds the high limit. Clear when the TEMP4 is below the “high limit –hysteresis” temperature.
0	T3_EXC	R	0	Set when the TEMP3 exceeds the high limit. Clear when the TEMP3 is below the “high limit –hysteresis” temperature.

7.25 External Device Bank Select Register — Index 65h

Bit	Name	R/W	Default	Description
7-1	-	R	0	Reserved
0	DEV_BANK_EN	R/W	0	Set 1 to select external device bank

7.26 Temperature Offset bank select Register -- Index 67h

Bit	Name	R/W	Default	Description
7-2	Reserved	RO	0	--
1-0	OFFSET_SEL	R/W	0	0: CR68 is local temperature offset. 1: CR68 is temperature 1 offset. 2: CR68 is temperature 2 offset.

7.27 Temperature Offset Register -- Index 68h

Bit	Name	R/W	Default	Description
7	-	RO	0	Reserved
6-0	T_OFFSET	R/W	0	Temperature offset register. The real temperature value will be added by this offset and then will be put into temperature reading (Index 70h~75h). The offset ranges from -64ºC to +63ºC. 7’b011_1111: mean temperature + 63; 7’b000_0001: mean temperature + 1; 7’b000_0000: mean temperature + 0; 7’b111_1111: mean temperature - 1; 7’b100_0000: mean temperature - 64;

Fintek Confidential Do Not Copy!

7.28 LOCAL and TEMP1 Limit Hystersis Select Register -- Index 6Ch (If DEV_BANK_EN is 0)

Bit	Name	R/W	Default	Description
7-4	TEMP1_HYS	R/W	0	Limit hysteresis. (0~15 degree C) Temperature and below the (boundary – hysteresis).
3-0	LOCAL_HYS	R/W	0	Limit hysteresis. (0~15 degree C) Temperature and below the (boundary – hysteresis).

7.29 TEMP3 and TEMP4 Limit Hystersis Select Register -- Index 6Ch (If DEV_BANK_EN is 1)

Bit	Name	R/W	Default	Description
7-4	TEMP4_HYS	R/W	0	Limit hysteresis. (0~15 degree C) Temperature and below the (boundary – hysteresis).
3-0	TEMP3_HYS	R/W	0	Limit hysteresis. (0~15 degree C) Temperature and below the (boundary – hysteresis).

7.30 TEMP2 Limit Hystersis Select Register -- Index 6Dh (If DEV_BANK_EN is 0)

Bit	Name	R/W	Default	Description
7-4	-	R	0	Reserved
3-0	TEMP2_HYS	R/W	0	Limit hysteresis. (0~15 degree C) Temperature and below the (boundary – hysteresis).

7.31 TEMP5 and TEMP6 Limit Hystersis Select Register -- Index 6Dh (If DEV_BANK_EN is 1)

Bit	Name	R/W	Default	Description
7-4	TEMP6_HYS	R/W	0h	Limit hysteresis. (0~15 degree C) Temperature and below the (boundary – hysteresis).
3-0	TEMP5_HYS	R/W	0h	Limit hysteresis. (0~15 degree C) Temperature and below the (boundary – hysteresis).

Fintek Confidential Do Not Copy!

7.32 TEMP7 and TEMP8 Limit Hystersis Select Register -- Index 6Eh (If DEV_BANK_EN is 1)

Bit	Name	R/W	Default	Description
7-4	TEMP8_HYS	R/W	0h	Limit hysteresis. (0~15 degree C) Temperature and below the (boundary – hysteresis).
3-0	TEMP7_HYS	R/W	0h	Limit hysteresis. (0~15 degree C) Temperature and below the (boundary – hysteresis).

7.33 DIODE OPEN Status Register -- Index 6Fh (If DEV_BANK_EN is 0)

Bit	Name	R/W	Default	Description
7-4	-	R	0	Reserved
4	DEV_OPEN	R	0	One of the diode of T3~T8 is open or short
3	-	R	0	Reserved
2	T2_DIODE_OPEN	R	0h	External diode 2 is open or short
1	T1_DIODE_OPEN	R	0h	External diode 1 is open or short
0	T0_DIODE_OPEN	R	0h	Internal diode 0 is open or short

7.34 DIODE OPEN Status Register -- Index 6Fh (If DEV_BANK_EN is 1)

Bit	Name	R/W	Default	Description
7-6	-	R	0	Reserved
5	T8_DIODE_OPEN	R	0	The diode of T8 is open or short
4	T7_DIODE_OPEN	R	0	The diode of T7 is open or short
3	T6_DIODE_OPEN	R	0	The diode of T6 is open or short
2	T5_DIODE_OPEN	R	0	The diode of T5 is open or short
1	T4_DIODE_OPEN	R	0	The diode of T4 is open or short
0	T3_DIODE_OPEN	R	0	The diode of T3 is open or short

Fintek Confidential Do Not Copy!

7.35 Temperature Register — Index 70h ~ 83h

Address	Attribute	Default Value	Description
70h	RO	--	Local temperature[10:3] reading. The unit of reading is 1°C.At the moment of reading this register. (when open or short this byte will return 0)
71h	RO	--	CR71 bit7-bit5 are the Local temperature reading value[2:0]. The unit of reading is 0.125°C. CR71 bit 0 is the sign bit of the Local temperature. (when open or short this byte will return 1, “sign bit set to 1”)
72h	RO	--	Temperature 1 reading. The unit of reading is 1°C.At the moment of reading this register. (PECI TEMP reading Value)
73h	RO	--	CR73 bit7-bit5 are the temperature 1 reading value[2:0]. The unit of reading is 0.125°C. CR73 bit 0 is the sign bit of the temperature 1. (when open or short this byte will return 1, “sign bit set to 1”)
74h	RO	--	Temperature 2 reading. The unit of reading is 1°C.At the moment of reading this register.
75h	RO	--	CR75 bit7-bit5 are the temperature 2 reading value[2:0]. The unit of reading is 0.125°C. CR75 bit 0 is the sign bit of the temperature 2. (when open or short this byte will return 1, “sign bit set to 1”)
78h	RO	--	T3_read (External Device 0) The unit of reading is 1°C.At the moment of reading this register.
79h	RO	--	T4_read (External Device 1) The unit of reading is 1°C.At the moment of reading this register.
7Ah	RO	--	T5_read (External Device 2) The unit of reading is 1°C.At the moment of reading this register.
7Bh	RO	--	T6_read (External Device 3) The unit of reading is 1°C.At the moment of reading this register.
7C	RO	--	T7_read (External Device 4) The unit of reading is 1°C.At the moment of reading this register.
7D	RO	--	T8_read (External Device 5) The unit of reading is 1°C.At the moment of reading this register.
81h	R/W	3Ch	Local Temperature sensor high limit. The unit is 1°C. (If DEV_BANK_EN is 0)
81h	R/W	55h	T3 high limit. The unit is 1°C. (If DEV_BANK_EN is 1)
83h	R/W	55h	Temperature sensor 1 high limit. The unit is 1°C. (If DEV_BANK_EN is 0)
83h	R/W	55h	T4 high limit. The unit is 1°C. (If DEV_BANK_EN is 1)

Fintek Confidential Do Not Copy!

85h	R/W	55h	Temperature sensor 2 high limit. The unit is 1°C. (When DEV_BANK_EN is 0)
85h	R/W	55h	T5 high limit. The unit is 1°C. (If DEV_BANK_EN is 1)
87h	R/W	55h	T6 high limit. The unit is 1°C. (If DEV_BANK_EN is 1)
89h	R/W	55h	T7 high limit. The unit is 1°C. (If DEV_BANK_EN is 1)
8Bh	R/W	55h	T8 high limit. The unit is 1°C. (If DEV_BANK_EN is 1)

7.36 Temperature Filter Select Register -- Index 8Eh

Bit	Name	R/W	Default	Description
7-6	-	R	0	Reserved
5-4	IIR-QUEUR2	R/W	1h	The queue time for second filter to quickly update values. 00: 8 times. 01: 16 times. (default). 10: 24 times. 11: 32 times.
3-2	IIR-QUEUR1	R/W	1h	The queue time for second filter to quickly update values. 00: 8 times. 01: 16 times. (default). 10: 24 times. 11: 32 times.
1-0	IIR-QUEUR-LOCAL	R/W	1h	The queue time for second filter to quickly update values. 00: 8 times. 01: 16 times. (default). 10: 24 times. 11: 32 times.

7.37 FAN PME# Enable Register — Index 90h

Bit	Name	R/W	Default	Description
7-3	-	R	0	Reserved
2	EN_FAN3_PME	R/W	0	A one enables the corresponding interrupt status bit for PME# interrupt.

Fintek Confidential
Do Not Copy!

1	EN_FAN2_PME	R/W	0	A one enables the corresponding interrupt status bit for PME# interrupt
0	EN_FAN1_PME	R/W	0	A one enables the corresponding interrupt status bit for PME# interrupt.

7.38 FAN Interrupt Status Register — Index 91h

Bit	Name	R/W	Default	Description
7-3	Reserved	RO	0	Reserved
2	FAN3_STS	R/W	--	This bit is set when the fan3 count exceeds the count limit. Write 1 to clear this bit, write 0 will be ignored.
1	FAN2_STS	R/W	--	This bit is set when the fan2 count exceeds the count limit. Write 1 to clear this bit, write 0 will be ignored.
0	FAN1_STS	R/W	--	This bit is set when the fan1 count exceeds the count limit. Write 1 to clear this bit, write 0 will be ignored.

7.39 FAN Real Time Status Register — Index 92h

Bit	Name	R/W	Default	Description
7-3	Reserved	--	0	Reserved
2	FAN3_EXC	RO	--	This bit set to high mean that fan3 count can't meet expect count over than SMI time(CR9F) or when duty not zero but fan stop over then 3 sec.
1	FAN2_EXC	RO	--	This bit set to high mean that fan2 count can't meet expect count over than SMI time(CR9F) or when duty not zero but fan stop over then 3 sec.
0	FAN1_EXC	RO	--	This bit set to high mean that fan1 count can't meet expect count over than SMI time(CR9F) or when duty not zero but fan stop over then 3 sec.

7.40 Fan Type Select Register -- Index 94h

Bit	Name	R/W	Default	Description
7-6	-	R/W	0	Reserved
5-4	FAN3_TYPE	R/W	2'b10	00: Output PWM mode (push pull) to control fans. 01 Reserved 10: Output PWM mode (open drain) to control Intel 4-wire fans. 11: Reserved.

Fintek Confidential Do Not Copy!

3-2	FAN2_TYPE	R/W	2'b10	00: Output PWM mode (push pull) to control fans. 01: Reserved 10: Output PWM mode (open drain) to control Intel 4-wire fans. 11: Reserved.
1-0	FAN1_TYPE	R/W	2'b10	00: Output PWM mode (push pull) to control fans. 01: Reserved 10: Output PWM mode (open drain) to control Intel 4-wire fans. 11: Reserved.

7.41 Fan mode Select Register -- Index 96h

Bit	Name	R/W	Default	Description
7-6	-	R/W	0	Reserved
5-4	FAN3_MODE	R/W	1h	00: Auto fan speed control, fan speed will follow different temperature by different **RPM** 01: Auto fan speed control, fan speed will follow different temperature by different **duty cycle** 10, 11: Reserved
3-2	FAN2_MODE	R/W	1h	00: Auto fan speed control, fan speed will follow different temperature by different **RPM.** 01: Auto fan speed control, fan speed will follow different temperature by different **duty cycle**. 10, 11: Reserved
1-0	FAN1_MODE	R/W	1h	00: Auto fan speed control, fan speed will follow different temperature by different **RPM**. 01: Auto fan speed control, fan speed will follow different temperature by different **duty cycle**. 10, 11: Reserved

7.42 Auto Fan1 and Fan2 Boundary Hystersis Select Register -- Index 98h

Bit	Name	R/W	Default	Description
7-4	FAN2_HYS	R/W	4h	0000: Boundary hysteresis. (0~15 degree C) Segment will change when the temperature over the boundary temperature and below the (boundary – hysteresis).
3-0	FAN1_HYS	R/W	4h	0000: Boundary hysteresis. (0~15 degree C) Segment will change when the temperature over the boundary temperature and below the (boundary – hysteresis).

Fintek Confidential Do Not Copy!

7.43 Auto Fan3 and Fan4 Boundary Hystersis Select Register -- Index 99h

Bit	Name	R/W	Default	Description
7-4	-	R	0	Reserved
3-0	FAN3_HYS	R/W	2h	0000: Boundary hysteresis. (0~15 degree C) Segment will change when the temperature over the boundary temperature and below the (boundary – hysteresis).

7.44 Fan1~Fan3 Up Fan Duty Change Rate Select Register -- Index 9A

Bit	Name	R/W	Default	Description
7-6	-	R	0h	Reserved
5-4	FAN3_U_RATE_SEL	R/W	1h	Fan3 duty increasing update rate 00: 2.5Hz 01: 5Hz (default) 10: 10Hz 11: 20Hz
3-2	FAN2_U_RATE_SEL	R/W	1h	Fan2 duty increasing update rate 00: 2.5Hz 01: 5Hz (default) 10: 10Hz 11: 20Hz
1-0	FAN1_U_RATE_SEL	R/W	1h	Fan1 duty increasing update rate 00: 2.5Hz 01: 5Hz (default) 10: 10Hz 11: 20Hz

7.45 Fan1~Fan3 Down Fan Duty Change Rate Select Register -- Index 9Bh

Bit	Name	R/W	Default	Description
7-6	-	R	0h	Reserved
5-4	FAN3_D_RATE_SEL	R/W	1h	Fan3 duty decreasing update rate 00: 2.5Hz 01: 5Hz (default) 10: 10Hz 11: 20Hz

Fintek Confidential Do Not Copy!

3-2	FAN2_D_RATE_SEL	R/W	1h	Fan2 duty decreasing update rate 00: 2.5Hz 01: 5Hz (default) 10: 10Hz 11: 20Hz
1-0	FAN1_D_RATE_SEL	R/W	1h	Fan1 duty decreasing update rate 00: 2.5Hz 01: 5Hz (default) 10: 10Hz 11: 20Hz

7.46 FAN1 and FAN2 START UP DUTY-CYCLE/VOLTAGE — Index 9Ch

Bit	Name	R/W	Default	Description
7-4	FAN2_MIN_DUTY	R/W	5h	When fan start, the FAN_CTRL2 will increase duty-cycle from 0 to this (value x 8) directly. And if fan speed is down, the FAN_CTRL 2 will decrease duty-cycle to 0 when the PWM duty cycle is less than this (value x 4).
3-0	FAN1_MIN_DUTY	R/W	5h	When fan start, the FAN_CTRL 1 will increase duty-cycle from 0 to this (value x 8 directly. And if fan speed is down, the FAN_CTRL 1 will decrease duty-cycle to 0 when the PWM duty cycle is less than this (value x 4).

7.47 FAN3 and FAN4 START UP DUTY-CYCLE/VOLTAGE — Index 9Dh

Bit	Name	R/W	Default	Description
7-4	-	R	0	Reserved
3-0	FAN3_MIN_DUTY	R/W	5h	When fan start, the FAN_CTRL 3 will increase duty-cycle from 0 to this (value x 8 directly. And if fan speed is down, the FAN_CTRL 3 will decrease duty-cycle to 0 when the PWM duty cycle is less than this (value x 4).

7.48 Fan SMI Time Register -- Index 9Fh

Bit	Name	R/W	Default	Description
7-4	Reserved	--	--	Reservd

Fintek Confidential Do Not Copy!

3-0	FAN_FAULT_TIME	R/W	ah	This register determines the time of fan fault. The condition to cause fan fault event is: When PWM_Duty reaches FFh, if the fan speed count can't reach the fan expect count in time. The unit of this register is 1 second. The default value is 11 seconds. (Set to 0 , means 1 seconds. ; Set to 1, means 2 seconds. Set to 2, means 3 seconds. ….) Another condition to cause fan fault event is fan stop and the PWM duty is greater than the minimum duty programmed by the register index 9C-9Dh.

7.49 Fan1 Index A0h- AFh

Address	Attribute	Default Value	Description
A0h	RO	8'h0f	FAN1 count reading (MSB). At the moment of reading this register, the LSB will be latched. This will prevent from data updating when reading. To read the fan count correctly, read MSB first and followed read the LSB.
A1h	RO	8'hff	FAN1 count reading (LSB).
A2h	R/W	8'h00	**RPM mode(CR96 bit0=0):** FAN1 expect speed count value (MSB), in auto fan mode (CR96 bit1➔0) this register is auto updated by hardware. **Duty mode(CR96 bit0=1):** This byte is reserved byte.
A3h	R/W	8'h01	**RPM mode(CR96 bit0=0):** FAN1 expect speed count value (LSB) or expect PWM duty, in auto fan mode this register is auto updated by hardware and read only. **Duty mode(CR96 bit0=1):** The Value programming in this byte is duty value. In auto fan mode(CR96 bit1➔0) this register is updated by hardware. Ex: 5➔ 5*100/255 % 255 ➔ 100%
A4h	R/W	8'h03	FAN1 full speed count reading (MSB). At the moment of reading this register, the LSB will be latched. This will prevent from data updating when reading. To read the fan count correctly, read MSB first and followed read the LSB.
A5h	R/W	8'hff	FAN1 full speed count reading (LSB).

Fintek Confidential Do Not Copy!

7.50 Fan2 Index B0h- BFh

Address	Attribute	Default Value	Description
B0h	RO	8'h0f	FAN2 count reading (MSB). At the moment of reading this register, the LSB will be latched. This will prevent from data updating when reading. To read the fan count correctly, read MSB first and followed read the LSB.
B1h	RO	8'hff	FAN2 count reading (LSB).
B2h	R/W	8'h00	**RPM mode(CR96 bit2=0):** FAN2 expect speed count value (MSB), in auto fan mode(CR96 bit3➔0) this register is auto updated by hardware. **Duty mode(CR96 bit2=1):** This byte is reserved byte.
B3h	R/W	8'h01	**RPM mode(CR96 bit2=0):** FAN2 expect speed count value (LSB) or expect PWM duty , in auto fan mode this register is auto updated by hardware and read only. **Duty mode(CR96 bit2=1):** The Value programming in this byte is duty value. In auto fan mode(CR96 bit3➔0) this register is updated by hardware. Ex: 5➔ 5*100/255 % 255 ➔ 100%
B4h	R/W	8'h03	FAN2 full speed count reading (MSB). At the moment of reading this register, the LSB will be latched. This will prevent from data updating when reading. To read the fan count correctly, read MSB first and followed read the LSB.
B5h	R/W	8'hff	FAN2 full speed count reading (LSB).

7.51 Fan3 Index C0h- CFh

Address	Attribute	Default Value	Description
C0h	RO	8'h0F	FAN3 count reading (MSB). At the moment of reading this register, the LSB will be latched. This will prevent from data updating when reading. To read the fan count correctly, read MSB first and followed read the LSB.
C1h	RO	8'hff	FAN3 count reading (LSB).

Fintek Confidential Do Not Copy!

C2h	R/W	8'h00	**RPM mode(CR96 bit4=0):** FAN3 expect speed count value (MSB), in auto fan mode(CR96 bit5➔0) this register is auto updated by hardware. **Duty mode(CR96 bit4=1):** This byte is reserved byte.
C3h	R/W	8'h01	**RPM mode(CR96 bit4=0):** FAN3 expect speed count value (LSB) or expect PWM duty , in auto fan mode this register is auto updated by hardware and read only. **Duty mode(CR96 bit4=1):** The Value programming in this byte is duty value. In auto fan mode(CR96 bit5➔0) this register is updated by hardware. Ex: 5➔ 5*100/255 % 255 ➔ 100%
C4h	R/W	8'h03	FAN3 full speed count reading (MSB). At the moment of reading this register, the LSB will be latched. This will prevent from data updating when reading. To read the fan count correctly, read MSB first and followed read the LSB.
C5h	R/W	8'hff	FAN3 full speed count reading (LSB).

7.52 FAN1 Control Register – Index D0h

Bit	Name	R/W	Default	Description
7	FAN1LOAD_BEFORE	R/W	0	Set 1 that fan speed will keep current temp. status before system re-boot up.
6	FAN1_NO_STOP	R/W	0	Set 1 that FAN1 will not stop but keep at FAN1_MIN_DUTY x 4
5	Reserved	R/W	0	Reserved
4	FAN1_INTP_EN	R/W	0	Set 1 will enable the interpolation of the fan expect table.
3-0	-	R	0	Reserved

7.53 FAN2 Control Register – Index D1h

Bit	Name	R/W	Default	Description
7	FAN2LOAD_BEFORE	R/W	0	Set 1 that fan speed will keep current temp. status before system re-boot up.
6	FAN2_NO_STOP	R/W	0	Set 1 that FAN2 will not stop but keep at FAN1_MIN_DUTY x 4
5	Reserved	R/W	0	Reserved
4	FAN2_INTP_EN	R/W	0	Set 1 will enable the interpolation of the fan expect table.

Fintek Confidential Do Not Copy!

3-0	-	R	0	Reserved

7.54 FAN3 Control Register – Index D2h

Bit	Name	R/W	Default	Description
7	FAN3LOAD_BEFORE	R/W	0	Set 1 that fan speed will keep current temp. status before system re-boot up.
6	FAN3_NO_STOP	R/W	0	Set 1 that FAN2 will not stop but keep at FAN1_MIN_DUTY x 4
5	Reserved	R/W	0	Reserved
4	FAN3_INTP_EN	R/W	0	Set 1 will enable the interpolation of the fan expect table.
3-0	-	R	0	Reserved

7.55 FAN Control Register – Index D3h

Bit	Name	R/W	Default	Description
7-3	-	R	0	Reserved
2	FAN3_MAX_SEL	R/W	0	0: fan3 speed will decide by temperature weighting 1: fan3 speed will decide by follow the fastest fan speed
1	FAN2_MAX_SEL	R/W	0	0: fan3 speed will decide by temperature weighting 1: fan3 speed will decide by follow the fastest fan speed
0	FAN1_MAX_SEL	R/W	0	0: fan3 speed will decide by temperature weighting 1: fan3 speed will decide by follow the fastest fan speed

7.56 Fan table bank select – Index D5h

Bit	Name	R/W	Default	Description
7-4	Reserved	R	0	Reserved
3-0	FAN_BANK_SEL	R/W	0	0: T0 table and weighting setting 1: T1 table and weighting setting 2: T2 table and weighting setting …… ….. 7: T7 table and weighting setting 8: T8 table and weighting setting

Fintek Confidential Do Not Copy!

FAN_BANK_SEL=0x00

7.57 FAN T0 Control Register 1 – Index D6h

Bit	Name	R/W	Default	Description
7-3	-	R	0	Reserved
1	T0_JUMP_HIGH_EN	R/W	1	Set 1 that FAN speed will jump to SEC1SPEED when temperature over BOUND1TEMP CRD9. Set 0 that FAN1 speed will raise up to SEC1SPEED by slop value (CR9A) when temperature over BOUND1TEMP CRD9..
0	T0_JUMP_LOW_EN	R/W	1	Set 1 that FAN speed will jump to SEC2SPEED when temperature under BOUND1TEMP Hystersis. Set 0 that FAN speed will decrease to SEC2SPEED by slop value (CR9B) when temperature under FAN1 Boundary Hystersis.

7.58 FAN T0 Control Register 2 – Index D7h

Bit	Name	R/W	Default	Description
7-4	FAN2_WEIGHT	R/W	0	Temperature 0 to FAN2 weight setting register: 0: T0 independent with FAN2. 1: Proportion of T0 to FAN2 is 1/15 2: Proportion of T0 to FAN2 is 2/15. ….. F: Proportion of T0 to FAN2 is 15/15
3-0	FAN1_WEIGHT	R/W	0	Temperature 0 to FAN1 weight setting register: 0: T0 independent with FAN1. 1: Proportion of T0 to FAN1 is 1/15 2: Proportion of T0 to FAN1 is 2/15. ….. F: Proportion of T0 to FAN1 is 15/15

7.59 FAN T0 Control Register 3 – Index D8h

Bit	Name	R/W	Default	Description
7-4	-	R	0	Reserved

Fintek Confidential Do Not Copy!

3-0	FAN3_WEIGHT	R/W	Fh	Temperature 0 to FAN3 weight setting register: 0: T0 independent with FAN3. 1: Proportion of T0 to FAN3 is 1/15 2: Proportion of T0 to FAN3 is 2/15. ….. F: Proportion of T0 to FAN3 is 15/15

7.60 FAN T0 Control Register 4 – Index D9h

Bit	Name	R/W	Default	Description
7-0	BOUND1TEMP	R/W	46h (70'C)	The 1st BOUNDARY temperature for T0 in temperature mode. When temperature is **exceed** this boundary, FAN expect value will load from segment **1** register (index DC)h. When temperature is **below** this boundary – hysteresis, FAN expect value will load from segment **2** register (index DDh).

7.61 FAN T0 Control Register 5 – Index DAh

Bit	Name	R/W	Default	Description
7-0	BOUND2TEMP	R/W	28h (40'C)	The 2st BOUNDARY temperature for T0 in temperature mode. When temperature is **exceed** this boundary, FAN1 expect value will load from segment **2** register (index DDh). When temperature is **below** this boundary – hysteresis, FAN expect value will load from segment **3** register (index DEh).

7.62 FAN T0 Control Register 6 – Index DCh

Bit	Name	R/W	Default	Description
7-0	SEC1SPEED	R/W	FFh (100%)	The meaning of this register is depending on the FAN_MODE(CR96) **2'b00:** The value that set in this byte is the relative expect fan speed % of the full speed in this temperature section. Ex: $Expectspeed = \left(\frac{32}{32+value}\right) \times Fullspeed$ 100%:full speed: User must set this register to 0. 60% full speed: (100-60)*32/60, so user must program 21 to this reg. X% full speed: The value programming in this byte is ➔ (100-X)*32/X **2'b01:** The value that set in this byte is mean the expect PWM duty-cycle in this temperature section.

Fintek Confidential Do Not Copy!

7.63 FAN T0 Control Register 7 – Index DDh

Bit	Name	R/W	Default	Description
7-0	SEC2SPEED	R/W	d9h (85%)	The meaning of this register is depending on the FAN_MODE(CR96) **2'b00:** The value that set in this byte is the relative expect fan speed % of the full speed in this temperature section. **2'b01:** The value that set in this byte is mean the expect PWM duty-cycle in this temperature section.

7.64 FAN T0 Control Register 8 – Index DEh

Bit	Name	R/W	Default	Description
7-0	SEC3SPEED	R/W	4ch (30%)	The meaning of this register is depending on the FAN_MODE(CR96) **2'b00:** The value that set in this byte is the relative expect fan speed % of the full speed in this temperature section. **2'b01:** The value that set in this byte is mean the expect PWM duty-cycle in this temperature section.

FAN_BANK_SEL=0x01

7.65 FAN T1 Control Register 1 – Index D6h

Bit	Name	R/W	Default	Description
7-3	-	R	0	Reserved
1	T1_JUMP_HIGH_EN	R/W	1	Set 1 that FAN speed will jump to SEC1SPEED when temperature over BOUND1TEMP CRD9. Set 0 that FAN1 speed will raise up to SEC1SPEED by slop value (CR9A) when temperature over BOUND1TEMP CRD9..
0	T1_JUMP_LOW_EN	R/W	1	Set 1 that FAN speed will jump to SEC2SPEED when temperature under BOUND1TEMP Hystersis. Set 0 that FAN speed will decrease to SEC2SPEED by slop value (CR9B) when temperature under FAN1 Boundary Hystersis.

7.66 FAN T1 Control Register 2 – Index D7h

Bit	Name	R/W	Default	Description

Fintek Confidential
Do Not Copy!

7-4	FAN2_WEIGHT	R/W	0	Temperature 1 to FAN2 weight setting register: 0: T0 independent with FAN2. 1: Proportion of T1 to FAN2 is 1/15 2: Proportion of T1 to FAN2 is 2/15. ….. F: Proportion of T1 to FAN2 is 15/15
3-0	FAN1_WEIGHT	R/W	Fh	Temperature 1 to FAN1 weight setting register: 0: T1 independent with FAN1. 1: Proportion of T1 to FAN1 is 1/15 2: Proportion of T1 to FAN1 is 2/15. ….. F: Proportion of T1 to FAN1 is 15/15

7.67 FAN T1 Control Register 3 – Index D8h

Bit	Name	R/W	Default	Description
7-4	-	R	0	Reserved
3-0	FAN3_WEIGHT	R/W	0	Temperature 1 to FAN3 weight setting register: 0: T1 independent with FAN3. 1: Proportion of T1 to FAN3 is 1/15 2: Proportion of T1 to FAN3 is 2/15. ….. F: Proportion of T1 to FAN3 is 15/15

7.68 FAN T1 Control Register 4 – Index D9h

Bit	Name	R/W	Default	Description
7-0	BOUND1TEMP	R/W	46h (70'C)	The 1st BOUNDARY temperature for T1 in temperature mode. When temperature is **exceed** this boundary, FAN expect value will load from segment **1** register (index DC)h. When temperature is **below** this boundary – hysteresis, FAN expect value will load from segment **2** register (index DDh).

Fintek Confidential
Do Not Copy!

7.69 FAN T1 Control Register 5 – Index DAh

Bit	Name	R/W	Default	Description
7-0	BOUND2TEMP	R/W	28h (40'C)	The 2st BOUNDARY temperature for T1 in temperature mode. When temperature is **exceed** this boundary, FAN1 expect value will load from segment **2** register (index DDh). When temperature is **below** this boundary – hysteresis, FAN expect value will load from segment **3** register (index DEh).

7.70 FAN T1 Control Register 6 – Index DCh

Bit	Name	R/W	Default	Description
7-0	SEC1SPEED	R/W	FFh (100%)	The meaning of this register is depending on the FAN_MODE(CR96) **2'b00:** The value that set in this byte is the relative expect fan speed % of the full speed in this temperature section. Ex: $Expectspeed=\left(\frac{32}{32+value}\right)\times Fullspeed$ 100%:full speed: User must set this register to 0. 60% full speed: (100-60)*32/60, so user must program 21 to this reg. X% full speed: The value programming in this byte is ➔ (100-X)*32/X **2'b01:** The value that set in this byte is mean the expect PWM duty-cycle in this temperature section.

7.71 FAN T1 Control Register 7 – Index DDh

Bit	Name	R/W	Default	Description
7-0	SEC2SPEED	R/W	d9h (85%)	The meaning of this register is depending on the FAN_MODE(CR96) **2'b00:** The value that set in this byte is the relative expect fan speed % of the full speed in this temperature section. **2'b01:** The value that set in this byte is mean the expect PWM duty-cycle in this temperature section.

7.72 FAN T1 Control Register 8 – Index DEh

Bit	Name	R/W	Default	Description

Fintek Confidential Do Not Copy!

7-0	SEC3SPEED	R/W	4ch (30%)	The meaning of this register is depending on the FAN_MODE(CR96) **2'b00:** The value that set in this byte is the relative expect fan speed % of the full speed in this temperature section. **2'b01:** The value that set in this byte is mean the expect PWM duty-cycle in this temperature section.

FAN_BANK_SEL=0x02

7.73 FAN T2 Control Register 1 – Index D6h

Bit	Name	R/W	Default	Description
7-3	-	R	0	Reserved
1	T2_JUMP_HIGH_EN	R/W	1	Set 1 that FAN speed will jump to SEC1SPEED when temperature over BOUND1TEMP CRD9. Set 0 that FAN1 speed will raise up to SEC1SPEED by slop value (CR9A) when temperature over BOUND1TEMP CRD9..
0	T2_JUMP_LOW_EN	R/W	1	Set 1 that FAN speed will jump to SEC2SPEED when temperature under BOUND1TEMP Hystersis. Set 0 that FAN speed will decrease to SEC2SPEED by slop value (CR9B) when temperature under FAN1 Boundary Hystersis.

7.74 FAN T2 Control Register 2 – Index D7h

Bit	Name	R/W	Default	Description
7-4	FAN2_WEIGHT	R/W	Fh	Temperature 2 to FAN2 weight setting register: 0: T2 independent with FAN2. 1: Proportion of T2 to FAN2 is 1/15 2: Proportion of T2 to FAN2 is 2/15. ….. F: Proportion of T2 to FAN2 is 15/15
3-0	FAN1_WEIGHT	R/W	0	Temperature 2 to FAN1 weight setting register: 0: T2 independent with FAN1. 1: Proportion of T2 to FAN1 is 1/15 2: Proportion of T2 to FAN1 is 2/15. ….. F: Proportion of T2 to FAN1 is 15/15

Fintek Confidential Do Not Copy!

7.75 FAN T2 Control Register 3 – Index D8h

Bit	Name	R/W	Default	Description
7-4	-	R	0	Reserved
3-0	FAN3_WEIGHT	R/W	0	Temperature 2 to FAN3 weight setting register: 0: T2 independent with FAN3. 1: Proportion of T2 to FAN3 is 1/15 2: Proportion of T2 to FAN3 is 2/15. ….. F: Proportion of T2 to FAN3 is 15/15

7.76 FAN T2 Control Register 4 – Index D9h

Bit	Name	R/W	Default	Description
7-0	BOUND1TEMP	R/W	46h (70'C)	The 1st BOUNDARY temperature for T2 in temperature mode. When temperature is **exceed** this boundary, FAN expect value will load from segment **1** register (index DC)h. When temperature is **below** this boundary – hysteresis, FAN expect value will load from segment **2** register (index DDh).

7.77 FAN T2 Control Register 5 – Index DAh

Bit	Name	R/W	Default	Description
7-0	BOUND2TEMP	R/W	28h (40'C)	The 2st BOUNDARY temperature for T2 in temperature mode. When temperature is **exceed** this boundary, FAN1 expect value will load from segment **2** register (index DDh). When temperature is **below** this boundary – hysteresis, FAN expect value will load from segment **3** register (index DEh).

7.78 FAN T2 Control Register 6 – Index DCh

Bit	Name	R/W	Default	Description

Fintek Confidential Do Not Copy!

7-0	SEC1SPEED	R/W	FFh (100%)	The meaning of this register is depending on the FAN_MODE(CR96) **2'b00:** The value that set in this byte is the relative expect fan speed % of the full speed in this temperature section. Ex: $Expectspeed=\left(\frac{32}{32+value}\right)\times Fullspeed$ 100%:full speed: User must set this register to 0. 60% full speed: (100-60)*32/60, so user must program 21 to this reg. X% full speed: The value programming in this byte is ➔ (100-X)*32/X **2'b01:** The value that set in this byte is mean the expect PWM duty-cycle in this temperature section.

7.79 FAN T2 Control Register 7 – Index DDh

Bit	Name	R/W	Default	Description
7-0	SEC2SPEED	R/W	d9h (85%)	The meaning of this register is depending on the FAN_MODE(CR96) **2'b00:** The value that set in this byte is the relative expect fan speed % of the full speed in this temperature section. **2'b01:** The value that set in this byte is mean the expect PWM duty-cycle in this temperature section.

7.80 FAN T2 Control Register 8 – Index DEh

Bit	Name	R/W	Default	Description
7-0	SEC3SPEED	R/W	4ch (30%)	The meaning of this register is depending on the FAN_MODE(CR96) **2'b00:** The value that set in this byte is the relative expect fan speed % of the full speed in this temperature section. **2'b01:** The value that set in this byte is mean the expect PWM duty-cycle in this temperature section.

FAN_BANK_SEL=0x03

7.81 FAN T3 Control Register 1 – Index D6h

Bit	Name	R/W	Default	Description
7-3	-	R	0	Reserved
1	T3_JUMP_HIGH_EN	R/W	0	Set 1 that FAN speed will jump to SEC1SPEED when temperature over BOUND1TEMP CRD9. Set 0 that FAN1 speed will raise up to SEC1SPEED by slop value (CR9A) when temperature over BOUND1TEMP CRD9..

Fintek Confidential Do Not Copy!

0	T3_JUMP_LOW_EN	R/W	0	Set 1 that FAN speed will jump to SEC2SPEED when temperature under BOUND1TEMP Hystersis. Set 0 that FAN speed will decrease to SEC2SPEED by slop value (CR9B) when temperature under FAN1 Boundary Hystersis.

7.82 FAN T3 Control Register 2 – Index D7h

Bit	Name	R/W	Default	Description
7-4	FAN2_WEIGHT	R/W	0	Temperature 3 to FAN2 weight setting register: 0: T3 independent with FAN2. 1: Proportion of T3 to FAN2 is 1/15 2: Proportion of T3 to FAN2 is 2/15. ….. F: Proportion of T3 to FAN2 is 15/15
3-0	FAN1_WEIGHT	R/W	0	Temperature 3 to FAN1 weight setting register: 0: T3 independent with FAN1. 1: Proportion of T3 to FAN1 is 1/15 2: Proportion of T3 to FAN1 is 2/15. ….. F: Proportion of T3 to FAN1 is 15/15

7.83 FAN T3 Control Register 3 – Index D8h

Bit	Name	R/W	Default	Description
7-4	-	R	0	Reserved
3-0	FAN3_WEIGHT	R/W	0	Temperature 3 to FAN3 weight setting register: 0: T3 independent with FAN3. 1: Proportion of T3 to FAN3 is 1/15 2: Proportion of T3 to FAN3 is 2/15. ….. F: Proportion of T3 to FAN3 is 15/15

7.84 FAN T3 Control Register 4 – Index D9h

Bit	Name	R/W	Default	Description

Fintek Confidential
Do Not Copy!

7-0	BOUND1TEMP	R/W	46h (70'C)	The 1st BOUNDARY temperature for T3 in temperature mode. When temperature is **exceed** this boundary, FAN expect value will load from segment **1** register (index DC)h. When temperature is **below** this boundary – hysteresis, FAN expect value will load from segment **2** register (index DDh).

7.85 FAN T3 Control Register 5 – Index DAh

Bit	Name	R/W	Default	Description
7-0	BOUND2TEMP	R/W	28h (40'C)	The 2st BOUNDARY temperature for T3 in temperature mode. When temperature is **exceed** this boundary, FAN1 expect value will load from segment **2** register (index DDh). When temperature is **below** this boundary – hysteresis, FAN expect value will load from segment **3** register (index DEh).

7.86 FAN T3 Control Register 6 – Index DCh

Bit	Name	R/W	Default	Description
7-0	SEC1SPEED	R/W	FFh (100%)	The meaning of this register is depending on the FAN_MODE(CR96) **2'b00:** The value that set in this byte is the relative expect fan speed % of the full speed in this temperature section. Ex: $Expectspeed = \left(\frac{32}{32+value}\right) \times Fullspeed$ 100%:full speed: User must set this register to 0. 60% full speed: (100-60)*32/60, so user must program 21 to this reg. X% full speed: The value programming in this byte is ➔ (100-X)*32/X **2'b01:** The value that set in this byte is mean the expect PWM duty-cycle in this temperature section.

7.87 FAN T3 Control Register 7 – Index DDh

Bit	Name	R/W	Default	Description
7-0	SEC2SPEED	R/W	d9h (85%)	The meaning of this register is depending on the FAN_MODE(CR96) **2'b00:** The value that set in this byte is the relative expect fan speed % of the full speed in this temperature section. **2'b01:** The value that set in this byte is mean the expect PWM duty-cycle in this temperature section.

Fintek Confidential Do Not Copy!

7.88 FAN T3 Control Register 8 – Index DEh

Bit	Name	R/W	Default	Description
7-0	SEC3SPEED	R/W	4ch (30%)	The meaning of this register is depending on the FAN_MODE(CR96) **2'b00:** The value that set in this byte is the relative expect fan speed % of the full speed in this temperature section. **2'b01:** The value that set in this byte is mean the expect PWM duty-cycle in this temperature section.

FAN_BANK_SEL=0x04

7.89 FAN T4 Control Register 1 – Index D6h

Bit	Name	R/W	Default	Description
7-3	-	R	0	Reserved
1	T4_JUMP_HIGH_EN	R/W	0	Set 1 that FAN speed will jump to SEC1SPEED when temperature over BOUND1TEMP CRD9. Set 0 that FAN1 speed will raise up to SEC1SPEED by slop value (CR9A) when temperature over BOUND1TEMP CRD9..
0	T4_JUMP_LOW_EN	R/W	0	Set 1 that FAN speed will jump to SEC2SPEED when temperature under BOUND1TEMP Hystersis. Set 0 that FAN speed will decrease to SEC2SPEED by slop value (CR9B) when temperature under FAN1 Boundary Hystersis.

7.90 FAN T4 Control Register 2 – Index D7h

Bit	Name	R/W	Default	Description
7-4	FAN2_WEIGHT	R/W	0	Temperature 4 to FAN2 weight setting register: 0: T4 independent with FAN2. 1: Proportion of T4 to FAN2 is 1/15 2: Proportion of T4 to FAN2 is 2/15. ….. F: Proportion of T4 to FAN2 is 15/15

Fintek Confidential Do Not Copy!

3-0	FAN1_WEIGHT	R/W	0	Temperature 4 to FAN1 weight setting register: 0: T4 independent with FAN1. 1: Proportion of T4 to FAN1 is 1/15 2: Proportion of T4 to FAN1 is 2/15. ….. F: Proportion of T4 to FAN1 is 15/15

7.91 FAN T4 Control Register 3 – Index D8h

Bit	Name	R/W	Default	Description
7-4	-	R	0	Reserved
3-0	FAN3_WEIGHT	R/W	0	Temperature 4 to FAN3 weight setting register: 0: T4 independent with FAN3. 1: Proportion of T4 to FAN3 is 1/15 2: Proportion of T4 to FAN3 is 2/15. ….. F: Proportion of T4 to FAN3 is 15/15

7.92 FAN T4 Control Register 4 – Index D9h

Bit	Name	R/W	Default	Description
7-0	BOUND1TEMP	R/W	46h (70'C)	The 1st BOUNDARY temperature for T4 in temperature mode. When temperature is **exceed** this boundary, FAN expect value will load from segment **1** register (index DC)h. When temperature is **below** this boundary – hysteresis, FAN expect value will load from segment **2** register (index DDh).

7.93 FAN T4 Control Register 5 – Index DAh

Bit	Name	R/W	Default	Description
7-0	BOUND2TEMP	R/W	28h (40'C)	The 2st BOUNDARY temperature for T4 in temperature mode. When temperature is **exceed** this boundary, FAN1 expect value will load from segment **2** register (index DDh). When temperature is **below** this boundary – hysteresis, FAN expect value will load from segment **3** register (index DEh).

Fintek Confidential Do Not Copy

7.94 FAN T4 Control Register 6 – Index DCh

Bit	Name	R/W	Default	Description
7-0	SEC1SPEED	R/W	FFh (100%)	The meaning of this register is depending on the FAN_MODE(CR96) **2'b00:** The value that set in this byte is the relative expect fan speed % of the full speed in this temperature section. Ex: $Expectspeed=\left(\frac{32}{32+value}\right)\times Fullspeed$ 100%:full speed: User must set this register to 0. 60% full speed: (100-60)*32/60, so user must program 21 to this reg. X% full speed: The value programming in this byte is ➔ (100-X)*32/X **2'b01:** The value that set in this byte is mean the expect PWM duty-cycle in this temperature section.

7.95 FAN T4 Control Register 7 – Index DDh

Bit	Name	R/W	Default	Description
7-0	SEC2SPEED	R/W	d9h (85%)	The meaning of this register is depending on the FAN_MODE(CR96) **2'b00:** The value that set in this byte is the relative expect fan speed % of the full speed in this temperature section. **2'b01:** The value that set in this byte is mean the expect PWM duty-cycle in this temperature section.

7.96 FAN T4 Control Register 8 – Index DEh

Bit	Name	R/W	Default	Description
7-0	SEC3SPEED	R/W	4ch (30%)	The meaning of this register is depending on the FAN_MODE(CR96) **2'b00:** The value that set in this byte is the relative expect fan speed % of the full speed in this temperature section. **2'b01:** The value that set in this byte is mean the expect PWM duty-cycle in this temperature section.

FAN_BANK_SEL=0x05

7.97 FAN T5 Control Register 1 – Index D6h

Bit	Name	R/W	Default	Description

Fintek Confidential Do Not Copy!

7-3	-	R	0	Reserved
1	T5_JUMP_HIGH_EN	R/W	0	Set 1 that FAN speed will jump to SEC1SPEED when temperature over BOUND1TEMP CRD9. Set 0 that FAN1 speed will raise up to SEC1SPEED by slop value (CR9A) when temperature over BOUND1TEMP CRD9..
0	T5_JUMP_LOW_EN	R/W	0	Set 1 that FAN speed will jump to SEC2SPEED when temperature under BOUND1TEMP Hystersis. Set 0 that FAN speed will decrease to SEC2SPEED by slop value (CR9B) when temperature under FAN1 Boundary Hystersis.

7.98 FAN T5 Control Register 2 – Index D7h

Bit	Name	R/W	Default	Description
7-4	FAN2_WEIGHT	R/W	0	Temperature 5 to FAN2 weight setting register: 0: T5 independent with FAN2. 1: Proportion of T5 to FAN2 is 1/15 2: Proportion of T5 to FAN2 is 2/15. ….. F: Proportion of T5 to FAN2 is 15/15
3-0	FAN1_WEIGHT	R/W	0	Temperature 5 to FAN1 weight setting register: 0: T5 independent with FAN1. 1: Proportion of T5 to FAN1 is 1/15 2: Proportion of T5 to FAN1 is 2/15. ….. F: Proportion of T5 to FAN1 is 15/15

7.99 FAN T5 Control Register 3 – Index D8h

Bit	Name	R/W	Default	Description
7-4	-	R	0	Reserved
3-0	FAN3_WEIGHT	R/W	0	Temperature 5 to FAN3 weight setting register: 0: T5 independent with FAN3. 1: Proportion of T5 to FAN3 is 1/15 2: Proportion of T5 to FAN3 is 2/15. ….. F: Proportion of T5 to FAN3 is 15/15

Fintek Confidential Do Not Copy!

7.100 FAN T5 Control Register 4 – Index D9h

Bit	Name	R/W	Default	Description
7-0	BOUND1TEMP	R/W	46h (70'C)	The 1st BOUNDARY temperature for T5 in temperature mode. When temperature is **exceed** this boundary, FAN expect value will load from segment **1** register (index DC)h. When temperature is **below** this boundary – hysteresis, FAN expect value will load from segment **2** register (index DDh).

7.101 FAN T5 Control Register 5 – Index DAh

Bit	Name	R/W	Default	Description
7-0	BOUND2TEMP	R/W	28h (40'C)	The 2st BOUNDARY temperature for T5 in temperature mode. When temperature is **exceed** this boundary, FAN1 expect value will load from segment **2** register (index DDh). When temperature is **below** this boundary – hysteresis, FAN expect value will load from segment **3** register (index DEh).

7.102 FAN T5 Control Register 6 – Index DCh

Bit	Name	R/W	Default	Description
7-0	SEC1SPEED	R/W	FFh (100%)	The meaning of this register is depending on the FAN_MODE(CR96) **2'b00:** The value that set in this byte is the relative expect fan speed % of the full speed in this temperature section. Ex: $Expectspeed = \left(\frac{32}{32+value}\right) \times Fullspeed$ 100%:full speed: User must set this register to 0. 60% full speed: (100-60)*32/60, so user must program 21 to this reg. X% full speed: The value programming in this byte is ➔ (100-X)*32/X **2'b01:** The value that set in this byte is mean the expect PWM duty-cycle in this temperature section.

7.103 FAN T5 Control Register 7 – Index DDh

Bit	Name	R/W	Default	Description

Fintek Confidential Do Not Copy!

7-0	SEC2SPEED	R/W	d9h (85%)	The meaning of this register is depending on the FAN_MODE(CR96) **2'b00:** The value that set in this byte is the relative expect fan speed % of the full speed in this temperature section. **2'b01:** The value that set in this byte is mean the expect PWM duty-cycle in this temperature section.

7.104 FAN T5 Control Register 8 – Index DEh

Bit	Name	R/W	Default	Description
7-0	SEC3SPEED	R/W	4ch (30%)	The meaning of this register is depending on the FAN_MODE(CR96) **2'b00:** The value that set in this byte is the relative expect fan speed % of the full speed in this temperature section. **2'b01:** The value that set in this byte is mean the expect PWM duty-cycle in this temperature section.

FAN_BANK_SEL=0x06

7.105 FAN T6 Control Register 1 – Index D6h

Bit	Name	R/W	Default	Description
7-3	-	R	0	Reserved
1	T6_JUMP_HIGH_EN	R/W	0	Set 1 that FAN speed will jump to SEC1SPEED when temperature over BOUND1TEMP CRD9. Set 0 that FAN1 speed will raise up to SEC1SPEED by slop value (CR9A) when temperature over BOUND1TEMP CRD9..
0	T6_JUMP_LOW_EN	R/W	0	Set 1 that FAN speed will jump to SEC2SPEED when temperature under BOUND1TEMP Hystersis. Set 0 that FAN speed will decrease to SEC2SPEED by slop value (CR9B) when temperature under FAN1 Boundary Hystersis.

7.106 FAN T6 Control Register 2 – Index D7h

Bit	Name	R/W	Default	Description
7-4	FAN2_WEIGHT	R/W	0	Temperature 6 to FAN2 weight setting register: 0: T6 independent with FAN2. 1: Proportion of T6 to FAN2 is 1/15 2: Proportion of T6 to FAN2 is 2/15. ….. F: Proportion of T6 to FAN2 is 15/15

Fintek Confidential Do Not Copy!

3-0	FAN1_WEIGHT	R/W	0	Temperature 6 to FAN2 weight setting register: 0: T6 independent with FAN1. 1: Proportion of T6 to FAN1 is 1/15 2: Proportion of T6 to FAN1 is 2/15. ….. F: Proportion of T6 to FAN1 is 15/15

7.107 FAN T6 Control Register 3 – Index D8h

Bit	Name	R/W	Default	Description
7-4	-	R	0	Reserved
3-0	FAN3_WEIGHT	R/W	0	Temperature 6 to FAN3 weight setting register: 0: T6 independent with FAN3. 1: Proportion of T6 to FAN3 is 1/15 2: Proportion of T6 to FAN3 is 2/15. ….. F: Proportion of T6 to FAN3 is 15/15

7.108 FAN T6 Control Register 4 – Index D9h

Bit	Name	R/W	Default	Description
7-0	BOUND1TEMP	R/W	46h (70'C)	The 1st BOUNDARY temperature for T6 in temperature mode. When temperature is **exceed** this boundary, FAN expect value will load from segment **1** register (index DC)h. When temperature is **below** this boundary – hysteresis, FAN expect value will load from segment **2** register (index DDh).

7.109 FAN T6 Control Register 5 – Index DAh

Bit	Name	R/W	Default	Description
7-0	BOUND2TEMP	R/W	28h (40'C)	The 2st BOUNDARY temperature for T6 in temperature mode. When temperature is **exceed** this boundary, FAN1 expect value will load from segment **2** register (index DDh). When temperature is **below** this boundary – hysteresis, FAN expect value will load from segment **3** register (index DEh).

Fintek Confidential Do Not Copy!

7.110 FAN T6 Control Register 6 – Index DCh

Bit	Name	R/W	Default	Description
7-0	SEC1SPEED	R/W	FFh (100%)	The meaning of this register is depending on the FAN_MODE(CR96) **2'b00:** The value that set in this byte is the relative expect fan speed % of the full speed in this temperature section. Ex: $Expectspeed=\left(\frac{32}{32+value}\right)\times Fullspeed$ 100%:full speed: User must set this register to 0. 60% full speed: (100-60)*32/60, so user must program 21 to this reg. X% full speed: The value programming in this byte is ➔ (100-X)*32/X **2'b01:** The value that set in this byte is mean the expect PWM duty-cycle in this temperature section.

7.111 FAN T6 Control Register 7 – Index DDh

Bit	Name	R/W	Default	Description
7-0	SEC2SPEED	R/W	d9h (85%)	The meaning of this register is depending on the FAN_MODE(CR96) **2'b00:** The value that set in this byte is the relative expect fan speed % of the full speed in this temperature section. **2'b01:** The value that set in this byte is mean the expect PWM duty-cycle in this temperature section.

7.112 FAN T6 Control Register 8 – Index DEh

Bit	Name	R/W	Default	Description
7-0	SEC3SPEED	R/W	4ch (30%)	The meaning of this register is depending on the FAN_MODE(CR96) **2'b00:** The value that set in this byte is the relative expect fan speed % of the full speed in this temperature section. **2'b01:** The value that set in this byte is mean the expect PWM duty-cycle in this temperature section.

FAN_BANK_SEL=0x07

7.113 FAN T7 Control Register 1 – Index D6h

Bit	Name	R/W	Default	Description

Fintek Confidential Do Not Copy!

7-3	-	R	0	Reserved
1	T7_JUMP_HIGH_EN	R/W	0	Set 1 that FAN speed will jump to SEC1SPEED when temperature over BOUND1TEMP CRD9. Set 0 that FAN1 speed will raise up to SEC1SPEED by slop value (CR9A) when temperature over BOUND1TEMP CRD9..
0	T7_JUMP_LOW_EN	R/W	0	Set 1 that FAN speed will jump to SEC2SPEED when temperature under BOUND1TEMP Hystersis. Set 0 that FAN speed will decrease to SEC2SPEED by slop value (CR9B) when temperature under FAN1 Boundary Hystersis.

7.114 FAN T7 Control Register 2 – Index D7h

Bit	Name	R/W	Default	Description
7-4	FAN2_WEIGHT	R/W	0	Temperature 7 to FAN2 weight setting register: 0: T7 independent with FAN2. 1: Proportion of T7 to FAN2 is 1/15 2: Proportion of T7 to FAN2 is 2/15. ….. F: Proportion of T7 to FAN2 is 15/15
3-0	FAN1_WEIGHT	R/W	0	Temperature 7 to FAN1 weight setting register: 0: T7 independent with FAN1. 1: Proportion of T7 to FAN1 is 1/15 2: Proportion of T7 to FAN1 is 2/15. ….. F: Proportion of T7 to FAN1 is 15/15

7.115 FAN T7 Control Register 3 – Index D8h

Bit	Name	R/W	Default	Description
7-4	-	R	0	Reserved
3-0	FAN3_WEIGHT	R/W	0	Temperature 7 to FAN3 weight setting register: 0: T7 independent with FAN3. 1: Proportion of T7 to FAN3 is 1/15 2: Proportion of T7 to FAN3 is 2/15. ….. F: Proportion of T7 to FAN3 is 15/15

Fintek Confidential Do Not Copy!

7.116 FAN T7 Control Register 4 – Index D9h

Bit	Name	R/W	Default	Description
7-0	BOUND1TEMP	R/W	46h (70'C)	The 1st BOUNDARY temperature for T7 in temperature mode. When temperature is **exceed** this boundary, FAN expect value will load from segment **1** register (index DC)h. When temperature is **below** this boundary – hysteresis, FAN expect value will load from segment **2** register (index DDh).

7.117 FAN T7 Control Register 5 – Index DAh

Bit	Name	R/W	Default	Description
7-0	BOUND2TEMP	R/W	28h (40'C)	The 2st BOUNDARY temperature for T7 in temperature mode. When temperature is **exceed** this boundary, FAN1 expect value will load from segment **2** register (index DDh). When temperature is **below** this boundary – hysteresis, FAN expect value will load from segment **3** register (index DEh).

7.118 FAN T7 Control Register 6 – Index DCh

Bit	Name	R/W	Default	Description
7-0	SEC1SPEED	R/W	FFh (100%)	The meaning of this register is depending on the FAN_MODE(CR96) **2'b00:** The value that set in this byte is the relative expect fan speed % of the full speed in this temperature section. Ex: $Expectspeed = \left(\frac{32}{32+value}\right) \times Fullspeed$ 100%:full speed: User must set this register to 0. 60% full speed: (100-60)*32/60, so user must program 21 to this reg. X% full speed: The value programming in this byte is ➔ (100-X)*32/X **2'b01:** The value that set in this byte is mean the expect PWM duty-cycle in this temperature section.

7.119 FAN T7 Control Register 7 – Index DDh

Bit	Name	R/W	Default	Description

Fintek Confidential Do Not Copy!

7-0	SEC2SPEED	R/W	d9h (85%)	The meaning of this register is depending on the FAN_MODE(CR96) **2'b00:** The value that set in this byte is the relative expect fan speed % of the full speed in this temperature section. **2'b01:** The value that set in this byte is mean the expect PWM duty-cycle in this temperature section.

7.120 FAN T7 Control Register 8 – Index DEh

Bit	Name	R/W	Default	Description
7-0	SEC3SPEED	R/W	4ch (30%)	The meaning of this register is depending on the FAN_MODE(CR96) **2'b00:** The value that set in this byte is the relative expect fan speed % of the full speed in this temperature section. **2'b01:** The value that set in this byte is mean the expect PWM duty-cycle in this temperature section.

FAN_BANK_SEL=0x08

7.121 FAN T8 Control Register 1 – Index D6h

Bit	Name	R/W	Default	Description
7-3	-	R	0	Reserved
1	T8_JUMP_HIGH_EN	R/W	0	Set 1 that FAN speed will jump to SEC1SPEED when temperature over BOUND1TEMP CRD9. Set 0 that FAN1 speed will raise up to SEC1SPEED by slop value (CR9A) when temperature over BOUND1TEMP CRD9..
0	T8_JUMP_LOW_EN	R/W	0	Set 1 that FAN speed will jump to SEC2SPEED when temperature under BOUND1TEMP Hystersis. Set 0 that FAN speed will decrease to SEC2SPEED by slop value (CR9B) when temperature under FAN1 Boundary Hystersis.

7.122 FAN T8 Control Register 2 – Index D7h

Bit	Name	R/W	Default	Description
7-4	FAN2_WEIGHT	R/W	0	Temperature 8 to FAN2 weight setting register: 0: T8 independent with FAN2. 1: Proportion of T8 to FAN2 is 1/15 2: Proportion of T8 to FAN2 is 2/15. ….. F: Proportion of T8 to FAN2 is 15/15

Fintek Confidential Do Not Copy!

3-0	FAN1_WEIGHT	R/W	0	Temperature 8 to FAN1 weight setting register: 0: T8 independent with FAN1. 1: Proportion of T8 to FAN1 is 1/15 2: Proportion of T8 to FAN1 is 2/15. ….. F: Proportion of T8 to FAN1 is 15/15

7.123 FAN T8 Control Register 3 – Index D8h

Bit	Name	R/W	Default	Description
7-4	-	R	0	Reserved
3-0	FAN3_WEIGHT	R/W	0	Temperature 8 to FAN3 weight setting register: 0: T8 independent with FAN3. 1: Proportion of T8 to FAN3 is 1/15 2: Proportion of T8 to FAN3 is 2/15. ….. F: Proportion of T8 to FAN3 is 15/15

7.124 FAN T8 Control Register 4 – Index D9h

Bit	Name	R/W	Default	Description
7-0	BOUND1TEMP	R/W	46h (70'C)	The 1st BOUNDARY temperature for T8 in temperature mode. When temperature is **exceed** this boundary, FAN expect value will load from segment **1** register (index DC)h. When temperature is **below** this boundary – hysteresis, FAN expect value will load from segment **2** register (index DDh).

7.125 FAN T8 Control Register 5 – Index DAh

Bit	Name	R/W	Default	Description
7-0	BOUND2TEMP	R/W	28h (40'C)	The 2st BOUNDARY temperature for T8 in temperature mode. When temperature is **exceed** this boundary, FAN1 expect value will load from segment **2** register (index DDh). When temperature is **below** this boundary – hysteresis, FAN expect value will load from segment **3** register (index DEh).

Fintek Confidential Do Not Copy!

7.126 FAN T8 Control Register 6 – Index DCh

Bit	Name	R/W	Default	Description
7-0	SEC1SPEED	R/W	FFh (100%)	The meaning of this register is depending on the FAN_MODE(CR96) **2'b00:** The value that set in this byte is the relative expect fan speed % of the full speed in this temperature section. Ex: $Expectspeed=\left(\frac{32}{32+value}\right)\times Fullspeed$ 100%:full speed: User must set this register to 0. 60% full speed: (100-60)*32/60, so user must program 21 to this reg. X% full speed: The value programming in this byte is ➔ (100-X)*32/X **2'b01:** The value that set in this byte is mean the expect PWM duty-cycle in this temperature section.

7.127 FAN T8 Control Register 7 – Index DDh

Bit	Name	R/W	Default	Description
7-0	SEC2SPEED	R/W	d9h (85%)	The meaning of this register is depending on the FAN_MODE(CR96) **2'b00:** The value that set in this byte is the relative expect fan speed % of the full speed in this temperature section. **2'b01:** The value that set in this byte is mean the expect PWM duty-cycle in this temperature section.

7.128 FAN T8 Control Register 8 – Index DEh

Bit	Name	R/W	Default	Description
7-0	SEC3SPEED	R/W	4ch (30%)	The meaning of this register is depending on the FAN_MODE(CR96) **2'b00:** The value that set in this byte is the relative expect fan speed % of the full speed in this temperature section. **2'b01:** The value that set in this byte is mean the expect PWM duty-cycle in this temperature section.

Fintek Confidential Do Not Copy!

8. Electrical characteristic

8.1 Absolute Maximum Ratings

PARAMETER	RATING	UNIT
Power Supply Voltage	-0.5 to 5.5	V
Input Voltage	-0.5 to VCC+0.5	V
Operating Temperature	0 to 70	° C
Storage Temperature	-55 to 150	° C

Note: Exposure to conditions beyond those listed under Absolute Maximum Ratings may adversely affect the life and reliability of the device

8.2 DC Characteristics

(T_A = 0° C to 70° C, VCC = 3.3V ± 10%, VSS = 0V)

Parameter	Conditions	MIN	TYP	MAX	Unit
Temperature Error, Remote Diode	60 °C < T_D < 100 °C, VCC = 3.0V to 3.6V		± 1		°C
	-40 °C <T_D < 60°C, 100 °C <T_D < 127°C		± 1	± 3	
Temperature Error, Local Diode	0 °C < T_A < 100 °C, VCC = 3.0V to 3.6V		± 1	± 3	°C
Supply Voltage range		3.0	3.3	3.6	V
Average operating supply current			1		mA
Standby supply current			480		uA
Resolution			0.125		°C
Power on reset threshold			2.2	2.4	V
Diode source current	High Level		95		uA
	Low Level		10		uA

Fintek Confidential Do Not Copy!

(T_A = 0° C to 70° C, VCC = 3.3V ± 10%, VSS = 0V)

PARAMETER	SYM.	MIN.	TYP.	MAX.	UNIT	CONDITIONS
IN_{ts5v} /OD_{12} - TTL level bi-directional pin with sink capability of 12 mA and schmitt-trigger level input with 5V tolerance						
Input Low Voltage	VIL			0.8	V	VCC = 3.3 V
Input High Voltage	VIH	2.0			V	VCC = 3.3 V
Output Low Current	IOL	10	12		mA	VOL = 0.4V
Input High Leakage	ILIH			+1	μA	VIN = VCC
Input Low Leakage	ILIL			-1	μA	VIN = 0V
IN_{ts5v} /O_{12} - TTL level bi-directional pin with source-sink capability of 12 mA and schmitt-trigger level input with 5V tolerance						
Input Low Threshold Voltage	Vt-	0.5	0.8	1.1	V	VCC = 3.3 V
Input High Threshold Voltage	Vt+	1.6	2.0	2.4	V	VCC = 3.3 V
Output Low Current	IOL	10	12		mA	VOL = 0.4 V
Output High Current	IOH		-12	-10	mA	VOH = 2.4V
Input High Leakage	ILIH			+1	μA	VIN = VCC
Input Low Leakage	ILIL			-1	μA	VIN = 0V
IN_{ts5v} - TTL level Schmitt-triggered input pin with 5V tolerance						
Input Low Threshold Voltage	Vt-	0.5	0.8	1.1	V	VCC = 3.3V
Input High Threshold Voltage	Vt+	1.6	2.0	2.4	V	VCC = 3.3V
Input High Leakage	ILIH			+1	μA	VIN = VCC
Input Low Leakage	ILIL			-1	μA	VIN = 0 V
I_{lv} /O_{D8-S1} – Low voltage level bidirection pin with 8 mA source capability (Internal pull-down sink 1 mA)						
Input Low Threshold Voltage	V_{lvt-}		0.4		V	VCC = 3.3V
Input High Threshold Voltage	V_{lvt+}		1.0		V	VCC = 3.3V
Input High Leakage	$ILIH_{lv}$			+1	μA	VIN = VCC
I_{lv} /O_{D8} – Low voltage level bidirection pin with 8 mA source capability						
Input Low Threshold Voltage	V_{lvt-}		0.4		V	VCC = 3.3V
Input High Threshold Voltage	V_{lvt+}		1.0		V	VCC = 3.3V
Input High Leakage	$ILIH_{lv}$			+1	μA	VIN = VCC
Input Low Leakage	ILIL_{lv}			-1	μA	VIN = 0 V

Fintek Confidential Do Not Copy!

8.3 AC Characteristics

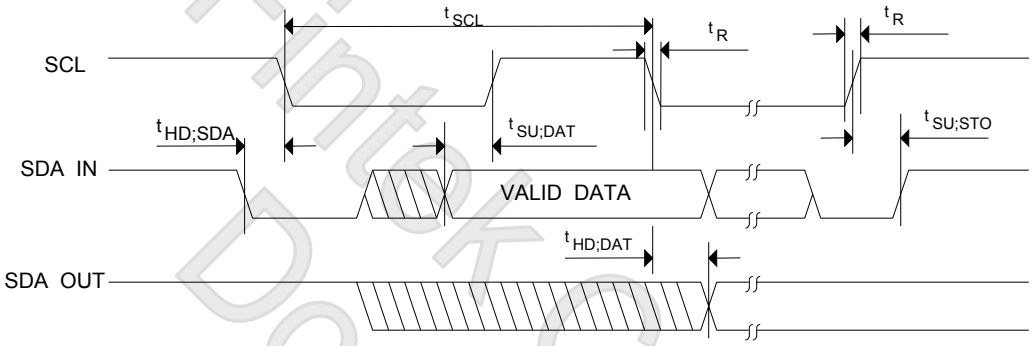

Serial Bus Timing Diagram

Serial Bus Timing

PARAMETER	SYMBOL	MIN.	MAX.	UNIT
SCL clock period	t_{SCL}	2	-	uS
Start condition hold time	$t_{HD;SDA}$	300	-	nS
Stop condition setup-up time	$t_{SU;STO}$	300	-	nS
DATA to SCL setup time	$t_{SU;DAT}$	50	-	nS
DATA to SCL hold time	$t_{HD;DAT}$	5	-	nS
SCL and SDA rise time	t_R	-	300	nS

Fintek Confidential Do Not Copy!

9. Ordering Information

Part Number	Package Type	Production Flow
F75377R	20 pin SSOP Green Package	Commercial, 0°C to +70°C

10. Package Dimensions

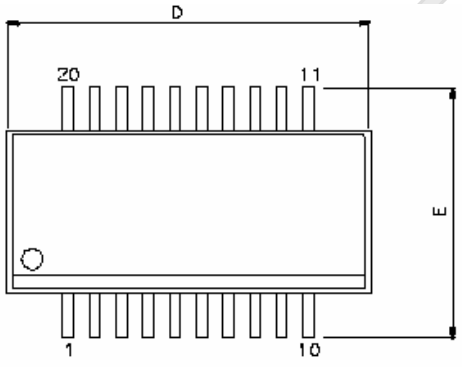

SYMBOLS	MIN.	NOM.	MAX.
A	0.053	0.064	0.069
A1	0.004	0.006	0.010
A2	–	–	0.059
b	0.008	–	0.012
C	0.007	–	0.010
D	0.337	0.341	0.344
E	0.228	0.236	0.244
E1	0.150	0.154	0.157
e	0.025 BASIC		
L	0.016	0.025	0.050
L1	0.041 BASIC		
θ°	0°	–	8°

UNIT : INCH

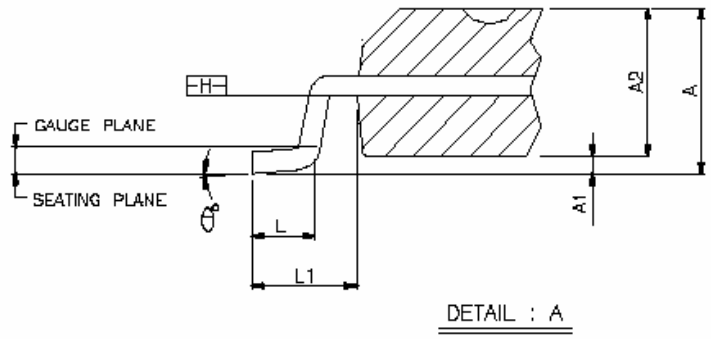

NOTES:

1.JEDEC OUTLINE : MO-137 AD

2.DIMENSION D DOES NOT INCLUDE MOLD PROTRUSIONS OR GATE BURRS. MOLD PROTRUSIONS AND GATE BURRS SHALL NOT EXCEED 0.006" PER SIDE. DIMENSION E1 DOES NOT INCLUDE INTERLEAD MOLD PROTRUSIONS. INTERLEAD MOLD PROTRUSIONS SHALL NOT EXCEED 0.010" PER SIDE.

3.DIMENSION b DOES NOT INCLUDE DAMBAR PROTRUSION/INTRUSION. ALLOWABLE DAMBAR PROTRUSION SHALL BE 0.004" TOTAL IN EXCESS OF b DIMENSION AT MAXIMUM MATERIAL CONDITION. DAMBAR INTRUSION SHALL NOT REDUCE DIMENSION b BY MORE THAN 0.002" AT LEAST.

Feature Integration Technology Inc.

Headquaters
7F, No 31, Shintai Rd.,
Jubei City, Hsinchu 302, Taiwan, R.O.C.
TEL : 886-3-6562727
FAX : 886-3-6560537
www: http://www.fintek.com.tw

Taipei Office
Bldg K4, 7F, No. 700, Chung Cheng Rd.,
Chungho City, Taipei 235, Taiwan, R.O.C.
TEL : 886-2-8227-8027
FAX : 886-2-8227-8037

Please note that all datasheet and specifications are subject to change without notice. All the trade marks of products and companies mentioned in this datasheet belong to their respective owner