PANEL MOUNT PUSHBUTTON – SINGLE POLE

E65-E69 Series



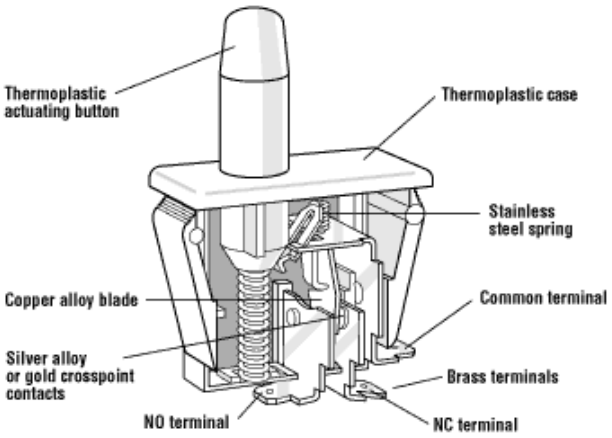

Features

- Choice of Momentary, Push-Pull (reset) and Cheat Interlock
- Long life coil spring, snap action mechanism
- Agency approved extended life versions available
- Snap in mounting
- VDE available on select models
- RoHS Compliant

Electrical Ratings and Operating Life				
	According to EN61058-1		**According to UL1054**	
Switch Series	Nominal Load	Operation cycles	Nominal Load	Operation cycles
E65	N/A	N/A	16A, 125/250VAC; 1/3HP; 125/250VAC	6,000
E68	N/A	N/A	0.1A, 125VAC	6,000 *
F68	0.1(0.05)A, 125VAC	50,000		
E69	N/A	N/A	10A, 125/250VAC; 1/3HP, 125/250VAC	6,000 *
F69	10(4)A, 250VAC	50,000		

* Extended life UL versions available. Contact factory for more information. Special part number required.

Technical Specifications		**Material Specifications**	
		Case:	Thermoplastic Polyester
Temperature Rating:	-40°C to 85°C	**Actuator button:**	Thermoplastic Acetal
Flammability Rating	UL94V-0	**Terminals:**	Brass (Common Ag plated)
Terminals	Up to 10A: 0.187" x 0.020" 16A: 0.250" x 0.032"	**Moving Blade:**	Beryllium Copper
	VDE versions: 0.0187" x 0.032"	**Spring:**	Stainless Steel
UL File Number:	E23301	**Contacts:**	Silver-CdO: E65, E/F69 Gold Crosspoint: E/F68

Specifications subject to change

Optional

PANELMOUNT PUSHBUTTON – SINGLE POLE

E65-E69 Series

Dimensions - inches

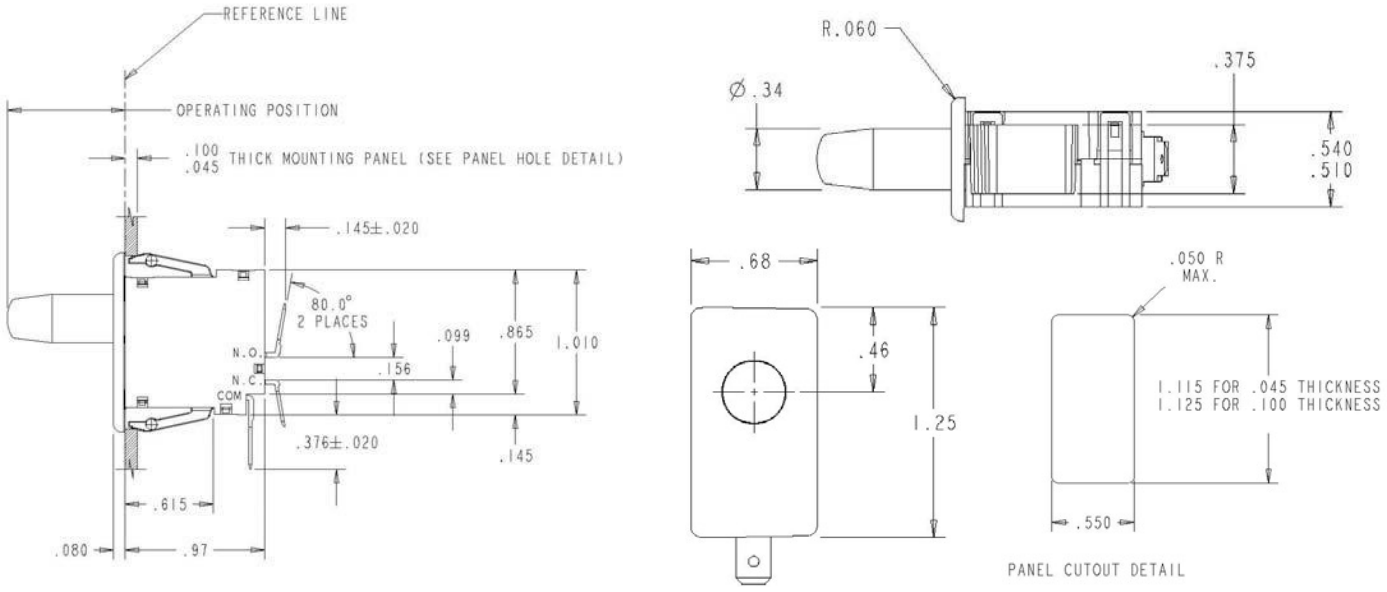

Commonly Stocked Distributor Items / Preferred Part Numbers

Item Number	EN Rating	UL Rating	Button Style	Rest Position inches (mm)	Maximum Pretravel inches (mm)	Operating Point inches (mm)	Minimum Overtravel inches (mm)	Max. Movement Differential inches (mm)	Maximum Operating Force (grams)	Maximum Full Overtravel inches (mm)
0E6500A0	N/A	16A, 125/250 VAC; 1/3HP, 125/250VAC	Momentary	0.845 - 0.905 21.46 - 22.99)	0.125 (3.18)	0.720-0.820 (18.29 - 20.83)	0.375 (9.53)	0.045 (1.14)	708	0.400 (10.16)
0E6800A0	N/A	0.1A 125VAC	Momentary	0.845 - 0.905 21.46 - 22.99)	0.125 (3.18)	0.720-0.820 (18.29 - 20.83)	0.375 (9.53)	0.045 (1.14)	425	0.400 (10.16)
0E6830A0	N/A	0.1A 125VAC	Momentary	0.730 - 0.790 18.54 - 20.07)	0.125 (3.18)	0.610 - 0.710 (15.49 - 18.03)	0.100 (2.54)	0.045 (1.14)	425	0.520 (13.21)
			Pull to Cheat	0.730 - 0.790 (18.54 - 20.07)	0.125 (3.18)	0.800 - 0.900 20.32 - 22.86)	0.050 (1.27)	0.060 (1.52)	585	0.980 (24.89)
0E6840A0	N/A	0.1A 125VAC	Momentary	0.420 - 0.480 (10.67 - 12.19)	0.125 (3.18)	0.300 - 0.400 (7.62 - 10.16)	0.175 (4.45)	0.045 (1.14)	425	0.125 (3.18)
0E6900A0	N/A	10A, 125/250VAC; 1/3HP 125/250VAC	Momentary	0.845 - 0.905 21.46 - 22.99)	0.125 (3.18)	0.720-0.820 (18.29 - 20.83)	0.375 (9.53)	0.045 (1.14)	425	0.400 (10.16)
0E6930A0	N/A	10A, 125/250VAC; 1/3HP 125/250VAC	Momentary	0.730 - 0.790 18.54 - 20.07)	0.125 (3.18)	0.610 - 0.710 (15.49 - 18.03)	0.100 (2.54)	0.045 (1.14)	425	0.520 (13.21)
			Pull to Cheat	0.730 - 0.790 (18.54 - 20.07)	0.125 (3.18)	0.800 - 0.900 20.32 - 22.86)	0.050 (1.27)	0.060 (1.52)	585	0.980 (24.89)
0E6940A0	N/A	10A, 125/250VAC; 1/3HP 125/250VAC	Momentary	0.420 - 0.480 (10.67 - 12.19)	0.125 (3.18)	0.300 - 0.400 (7.62 - 10.16)	0.175 (4.45)	0.045 (1.14)	425	0.125 (3.18)

PANELMOUNT PUSHBUTTON – SINGLE POLE

E65-E69 Series

Button Details

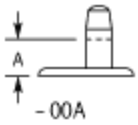

Basic Momentary

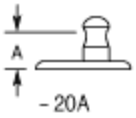

Push-Pull (Reset)

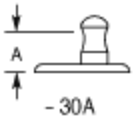

Momentary

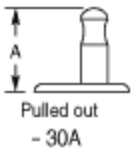

Cheat Interlock

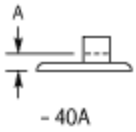

Short Button Momentary

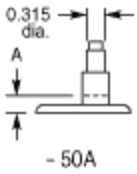

Momentary - For Auxiliary Push Button

"A" dimension is full overtravel dimension – see above

Ordering Information

Select the desired contact rating	Combine with the button style	Full part number
E69	**40A**	**E69-40A**

For single throw versions:

Select the desired contact rating	Combine with the button style	SPST – NO	SPST - NC
E69	**40A**	**E69-41A** (Add 1 to suffix)	**E69-42A** (Add 2 to suffix)

Contact

Call, fax or visit our
Website for more information.

ZF Electronics Corporation
11200 88th Avenue
Pleasant Prairie, WI 53158

Phone: 262.942.6500
Web: www.switches-sensors.zf.com
Email: switches-sensors@zf.com
Fax: 262.942.6566

The manufacturer accepts no liability for errors or non-availability, and reserves the right to change specifications without prior notice.

Technical data relates to product specifications only. Features may differ from those described. Only drawings combined with product specifications shall be deemed binding.

© 2007 ZF Electronics Corporation

Last Updated: 070711