HCMOS 5x3.2mm 2.5V SMD Oscillator

Model: F540L SERIES **RoHS Compliant / Pb Free** **Rev. 7/23/2007**

http://www.foxonline.com/need_a_sample.htm

Need a Sample®

FEATURES

- 2.5V Operation
- HCMOS Output
- Standby Function
- Low Power Consumption
- Tape and Reel (2,000 pcs. STD)

• PART NUMBER SELECTION

Learn More - Internet Required

Part Number	Model Number	Frequency Stability[1]	Operating Temperature (ºC)	Frequency Range (MHz)
558-Frequency-xxxxx	F540L	±100PPM	-10 ~ +70	1.800 ~ 50.000
559-Frequency-xxxxx	F540LR	±100PPM	-40 ~ +85	1.800 ~ 50.000
560-Frequency-xxxxx	F545L	±50PPM	-10 ~ +70	1.800~ 50.000
561-Frequency-xxxxx	F545LR	±50PPM	-40 ~ +85	1.800~ 50.000
562-Frequency-xxxxx	F546L	±25PPM	-10 ~ +70	1.800~ 50.000
563-Frequency-xxxxx	F546LR	±25PPM*	-40 ~ +85	1.800 ~ 50.000
564-Frequency-xxxxx	F548L	±20PPM*	-10 ~ +70	1.800 ~ 50.000

• ELECTRICAL CHARACTERISTICS

PARAMETERS	MAX (unless otherwise noted)
Frequency Range (FO)	1.800 ~ 50.000 MHz
Storage Temperature Range (TSTG)	-55ºC ~ +125ºC
Supply Voltage (VDD)	2.5V ± 5%
Input Current (IDD)	
1.800 ~ 32.000 MHz	10mA
32.000+ ~ 50.000 MHz	12mA
Output Symmetry (50% VDD)	45% ~ 55%
Rise Time (10% ~ 90% VDD) (TR)	5nS
Fall Time (90% ~ 10% VDD) (TF)	5nS
Output Voltage (VOL)	10% VDD
(VOH)	90% VDD Min
Output Current (IOL)	4mA Min
(IOH)	4mA Min
Output Load (HCMOS)	15pF
Standby Current	10µa
Start-up Time (TS)	10mS
Output Disable Time [2]	150nS
Output Enable Time [2]	10mS

[1] Inclusive of 25ºC tolerance, operating temperature range, input voltage change, load change, aging, shock, and vibration. *Excludes Shock/Vibration

[2] An internal pullup resistor from pin 1 to pin 4 allows active output if pin 1 is left open.

All specifications subject to change without notice.

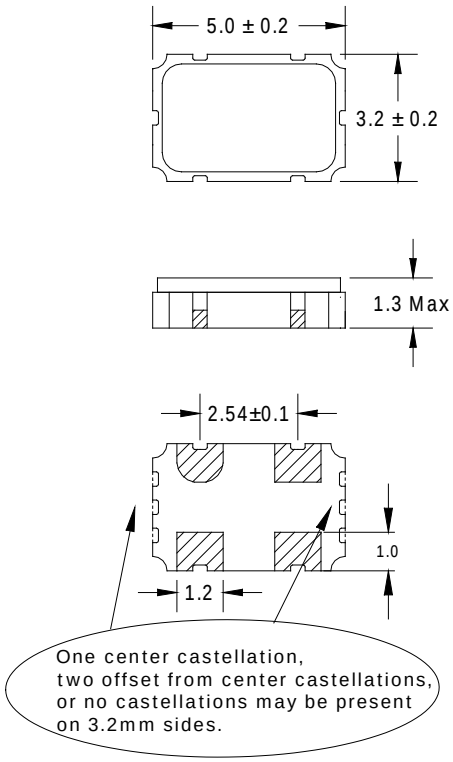

Recommended Solder Pad Layout

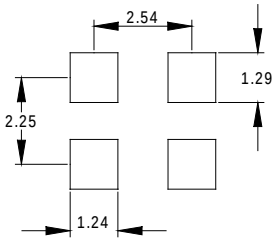

All dimensions are in millimeters.

Pin Connections

#1 E/D	#3 Output
#2 GND	#4 VDD

• ENABLE / DISABLE FUNCTION

INH (Pin 1)	OUTPUT (Pin 3)
OPEN [2]	ACTIVE
'1' Level VIH ≥ 70% VDD	ACTIVE
'0' Level VIL ≤ 30% VDD	High Z

FOXElectronics 5570 Enterprise Parkway Fort Myers, Florida 33905 USA +1.239.693.0099 FAX +1.239.693.1554 http://www.foxonline.com

EMEA Tel/Fax: +44 .1767.312632 | **Asia** Hong Kong Tel: +852.2854.4285 Fax +852.2854.4282 | **Taiwan** Tel: +886.2.22073427 Fax +886.2.22073486 | **Japan** Tel: +81.3.3374/2079 Fax: +81.3.3374.5221

© 2007 FOX ELECTRONICS | ISO9001:2000 Certified

HCMOS 5x3.2mm 2.5V SMD Oscillator

Model: F540L SERIES **RoHS Compliant / Pb Free** **Rev. 7/23/2007**

http://www.foxonline.com/need_a_sample.htm

Need a Sample®

• TAPE SPECIFICATIONS (millimeters)

MODEL	A	B	C	D	E	F	STD Reel QTY
F540L Series	∅1.5	4.0	8.0	7.5	16.0	2.5	2,000

• REEL SPECIFICATIONS (millimeters)

MODEL	G	H	I	J	K	L	M
F540L Series	2.0	∅13	∅21	∅80	∅250	13.5	2.0

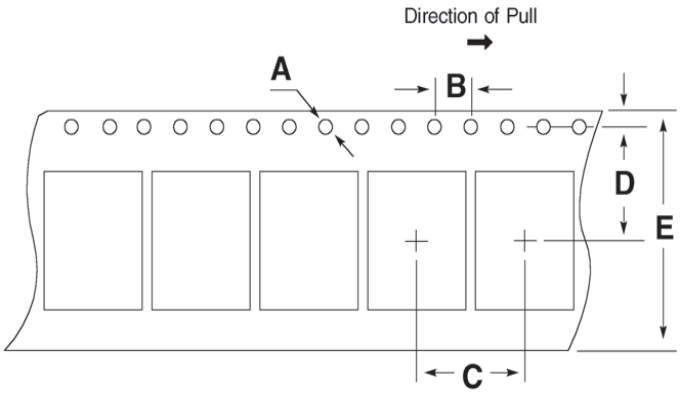

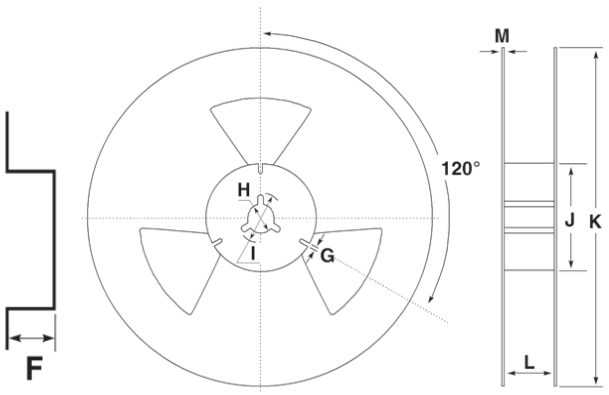

© 2007 FOX ELECTRONICS | ISO9001:2000 Certified